JAERI-M
82-119

IRRADIATION FACILITIES IN JMTR

September 1982

Hirokatsu NAKATA, Isao TANAKA, Yoshinori ICHIHASHI *
Hiroharu ITAMI and Hisanori ITOH

日 本 原 子 力 研 究 所
Japan Atomic Energy Research Institute

JAERI-M レポートは，日本原子力研究所が不定期に公刊している研究報告書です。
入手の問合わせは，日本原子力研究所技術情報部情報資料課（〒319—11 茨城県那珂郡東海村）あて，お申しこしください。なお，このほかに財団法人原子力弘済会資料センター（〒319—11 茨城県那珂郡東海村日本原子力研究所内）で複写による実費頒布をおこなっております。

JAERI-M reports are issued irregularly.
Inquiries about availability of the reports should be addressed to Information Section, Division of Technical Information, Japan Atomic Energy Research Institute, Tokai-mura, Naka-gun, Ibaraki-ken 319—11, Japan.

編集兼発行　日本原子力研究所
印　　刷　日立高速印刷株式会社

Irradiation Facilities in JMTR

Hirokatsu NAKATA, Isao TANAKA, Yoshinori ICHIHASHI*
Hiroharu ITAMI and Hisanori ITOH
Division of JMTR project,
Oarai Research Establishment, JAERI

(Received August 6, 1982)

The JMTR (Japan Materials Testing Reactor) was designed to provide suitable facilities for conducting nuclear irradiation experiments necessary for the research and development of power reactor in Japan. The JMTR consists of a 50 MW high flux reactor, irradiation facilities and a multi-cell hot laboratory. The available irradiation facilities are various kinds of capsules, hydraulic rabbit facilities, neutron control facility, high temperature and high pressure water loops, and high temperature and high pressure gas loop.

The aim of this publication is a representation of the information concerned with the irradiation facilities.

Key words: JMTR, Irradiation Facility, High Flux Reactor, Irradiation Experiment, Hot Laboratory, Capsule, Loop

---

* Science and Technology Agency, Tokyo

ＪＭＴＲの照射装置

日本原子力研究所大洗研究所材料試験炉部
中田　宏勝・田中　勲・市橋　芳徳*
伊丹　宏治・伊藤　尚徳

（1982年8月6日受理）

ＪＭＴＲ（材料試験炉）は，日本における動力炉の研究開発に必要な照射実験を行うため設置されたものであり，50ＭＷの高中性子束炉，各種照射装置および大型ホットラボから成っている。利用可能な照射装置には，多様なキャプセル，水力ラビット装置，中性子制御装置，高温高圧水ループ，同ガスループなどがある。

本稿の目的は，これら照射装置に関する情報を提供することである。

* 科学技術庁

CONTENTS

目　　次

1. Introduction

The JMTR (Japan Materials Testing Reactor) was designed to provide suitable facitilies for conducting nuclear irradiation experiments necessary for the research and developments of power reactor in Japan, and is owned and operated by the JAERI (Japan Atomic Energy Research Institute). The JMTR is located in the Oarai Establishment, which is one of the four establishments of the JAERI.

The JMTR consists of a 50 MW high flux reactor, irradiation facilities and a multi-cell hot laboratory.

The construction work of the reactor was started on June 1965. The reactor went to the first criticality on March 1968, and power operation of 30 MW for irradiation experiment started on January 1970. The reactor power was increased to 50 MW on November 1971 with a minor change of reactor core configuration.

The available irradiation facilities are various kinds of capsules, hydraulic rabbit facilities, special facilities such as neutron control facility, and water and gas loops. The capsules are loaded into irradiation holes and cooled by reactor coolant. The loops have individual high temperature and high pressure water or gas circuit mainly for the irradiation under the similar condition to power reactor.

The hot laboratory was completed at the end of 1970, and has been continuously improved its ability. The laboratory is connected to the reactor with water canal, and is capable of conducting a wide variety of PIE (Post irradiation examination).

The aim of this publication is a representation of the information concerned with the irradiation facilities. After brief explanation of a configuration and characteristics of the reactor, important information are given on irradiation facilities, which are used for fissile and non-fissile materials irradiation as well as for radioisotope production. In-core instrumentation and data acquisition system, which play important role for irradiation experiments, are also described.

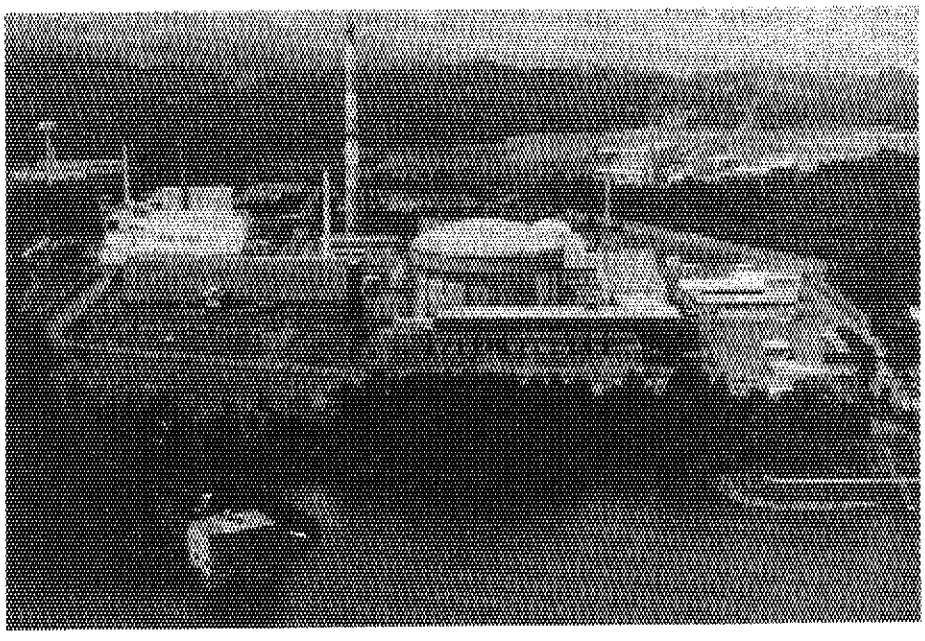

Fig. 1.1 Panoramic View of the JMTR

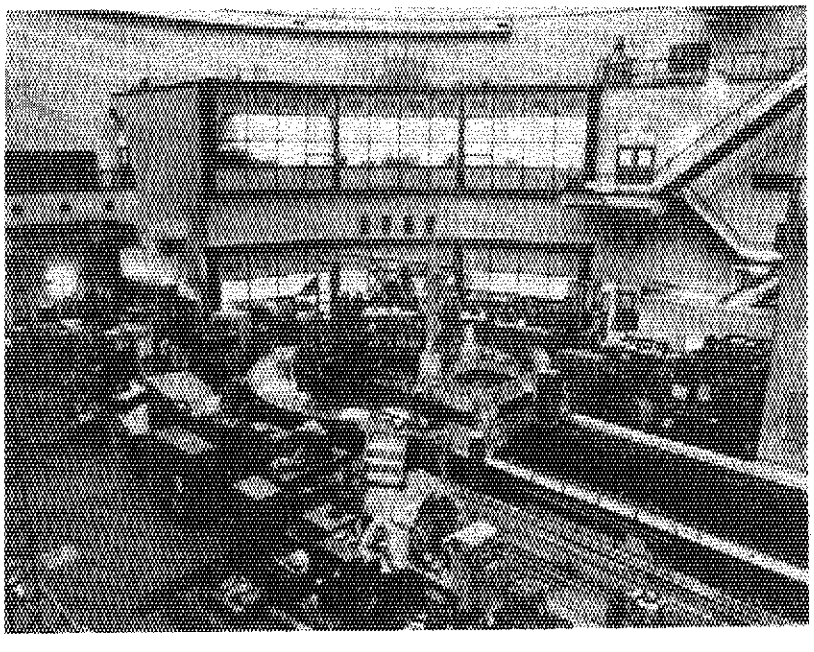

Fig. 1.2 Inside View of the Reactor Building

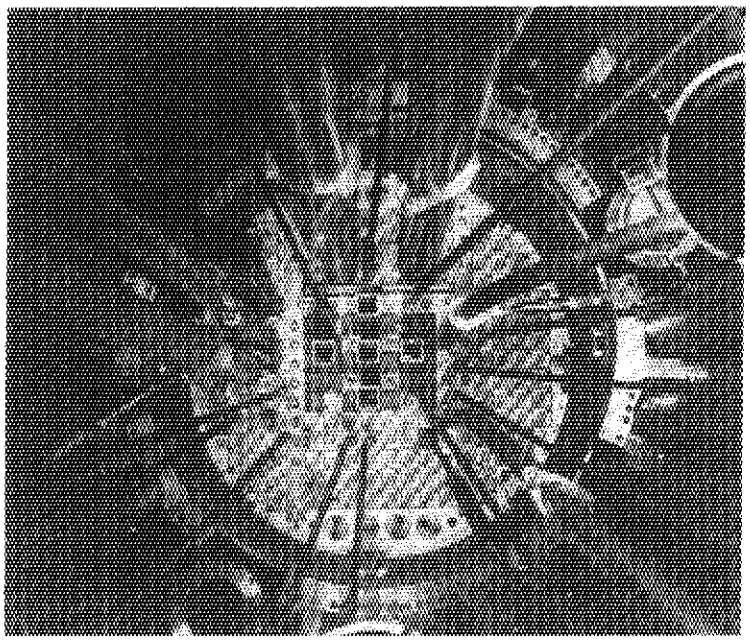

Fig. 1.3 JMTR Core

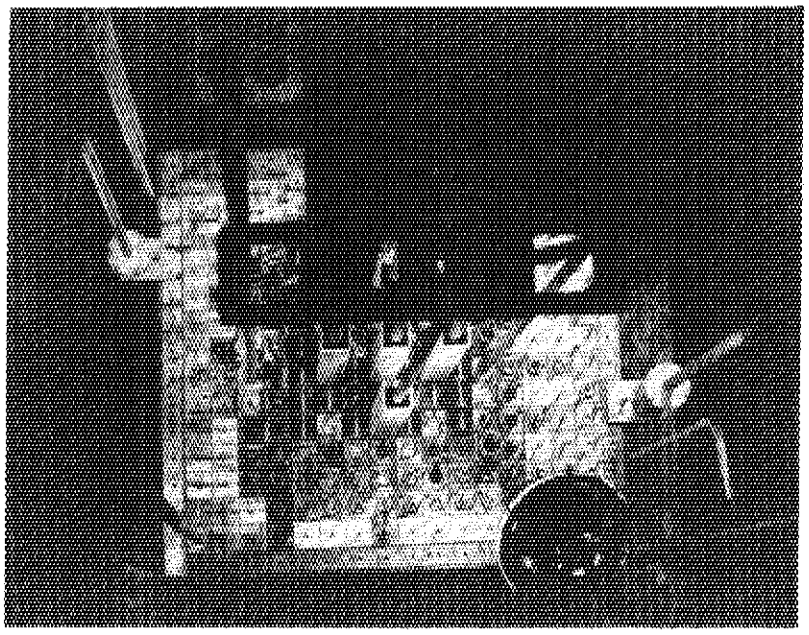

Fig. 1.4 JMTRC

2. JMTR

2.1 Reactor description

The main part of the JMTR is a 50 MW highly enriched heterogenous reactor, which is cooled and moderated by light water, and reflected by beryllium.

The core, 1560 mm in diameter and 750 mm in effective height, is divided into a fuel region and reflector region. The fuel region is a 7 × 5 array (540 mm × 386 mm) containing 22 fuel elements, 5 control rods and 8 experiment positions. These positions are served mainly for testing structual materials which require the irradiation of fast neutron flux. The reflector region consists of the inner reflectors of beryllium and the outer reflectors of aluminum. The reflector region, because of producing relatively constant and high thermal neutron flux during operation, is served mainly as space for irradiation of fuel materials.

About 100 capsules irradiation can be carried out in the core. However, instrumented capsules will be less than 20 due to the limited number of reactor vessel nozzles available for penetration of the instrument leads. On the grid plate, are provided 10 insertion holes for loop experiments, one in the fuel region and 9 in the reflector region. The maximum diameter of loop is 6 inches.

The fuel elements (horizontal cross section 77 mm × 77 mm, height 1200 mm) are of the modified ETR type. Each element contains 19 fuel plates of 1.27 mm thick, 71 mm wide and 768 mm long. The fuel meat is made of about 23 w/o 93 % enriched uranium aluminum alloy, which results in about 279 g of 235-U per element.

Each control rods consists of a box type hafnium section on top of a fuel section. The fuel section contains 16 fuel plates with a total weight of 195 g 235-U. Their drive mechanism is situated below the reactor. The control rods are moved on a vertical direction. When a control rod moved upwards, the fuel section moves into the core displacing the hafnium section.

All of reflector element used have a same outside dimensions as a fuel element. Each element is equipped with a irradiation hole drilled along its axis. The hole is filled with a solid plug of same material as the element when not in use for irradiation experiment. Diameters of the holes are 32 mm, 38 mm and 42 mm for beryllium reflectors, and 32 mm, 38 mm, 42 mm, 62 mm and 67 mm for aluminum reflectors. Reflector element with desired hole could be inserted into a desired core position.

The reactor vessel is a stainless steel tank of 3 m in diameter and 9.5 m in height. Its wall thickness is 34 mm. It is designed to withstand an internal pressure of 18 kg/cm^2G. The top head flanged to the shell has openings for the access to the core and many nozzles for experiments. The bottom head also provides the holes for through-loops as well as for control rods.

The reactor core is cooled by circulating demineralized water in a closed circuit, consisting of the reactor vessel, three main pumps and the tube side of the three water to water heat exchangers. The water flows downward through the reactor core. The velocity along the fuel plates is 10 m/s. The flow rate through the core is 6000 m^3/h. Max. water inlet temperature is 47°C. The corresponding outlet temperature is 56°C. In the heat exchangers the reactor power is dissipated to the secondary coolant, which is circulated over cooling towers. The flow rate of secondary water is 3900 m^3/h. Number of operating towers are to be selected according to wheather condition.

The reactor vessel is situated in the reactor pool of 6 m in diameter and 13.7 m in depth. There is a water layer of 4.2 m above the reactor vessel during power operation. The water level in the pool is lowered to the top level of the reactor vessel for the handling of fuel elements and irradiation facilities during the shut down periods. Connecting the reactor pool, there is a canal of 3 m width and 6 m in depth to the Hot Laboratory adjacent to the reactor building.

Description of the JMTR

Type	Tank type
Power	50 MW
Moderator/coolant	H_2O (14 kg/cm^2G, 50°C)
Reflector	Be and Al
Fuel; material	U/Al alloy
enrichment	93 %
loading	6.5 Kg of 235-U
type	Modified ETR
Control rod	5 Hf rods with 5 fuel followers

Neutron flux ($\times 10^{14}$ $n/cm^2 \cdot s$), (max.);

	fast (>1 Mev)	thermal
fuel region	4	4
reflector region	1	4

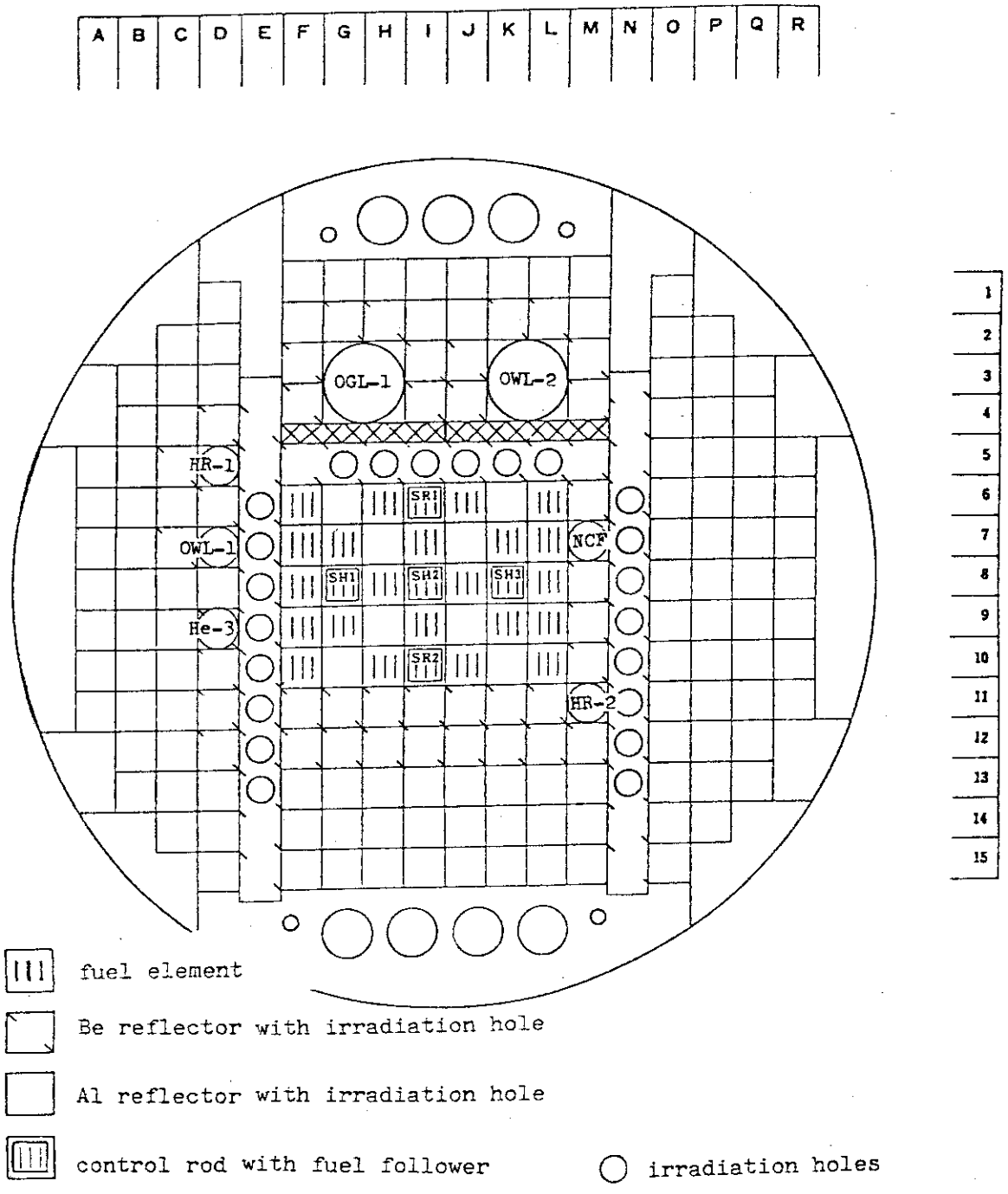

Fig. 2.1.1 Irradiation Facilities in the JMTR Core

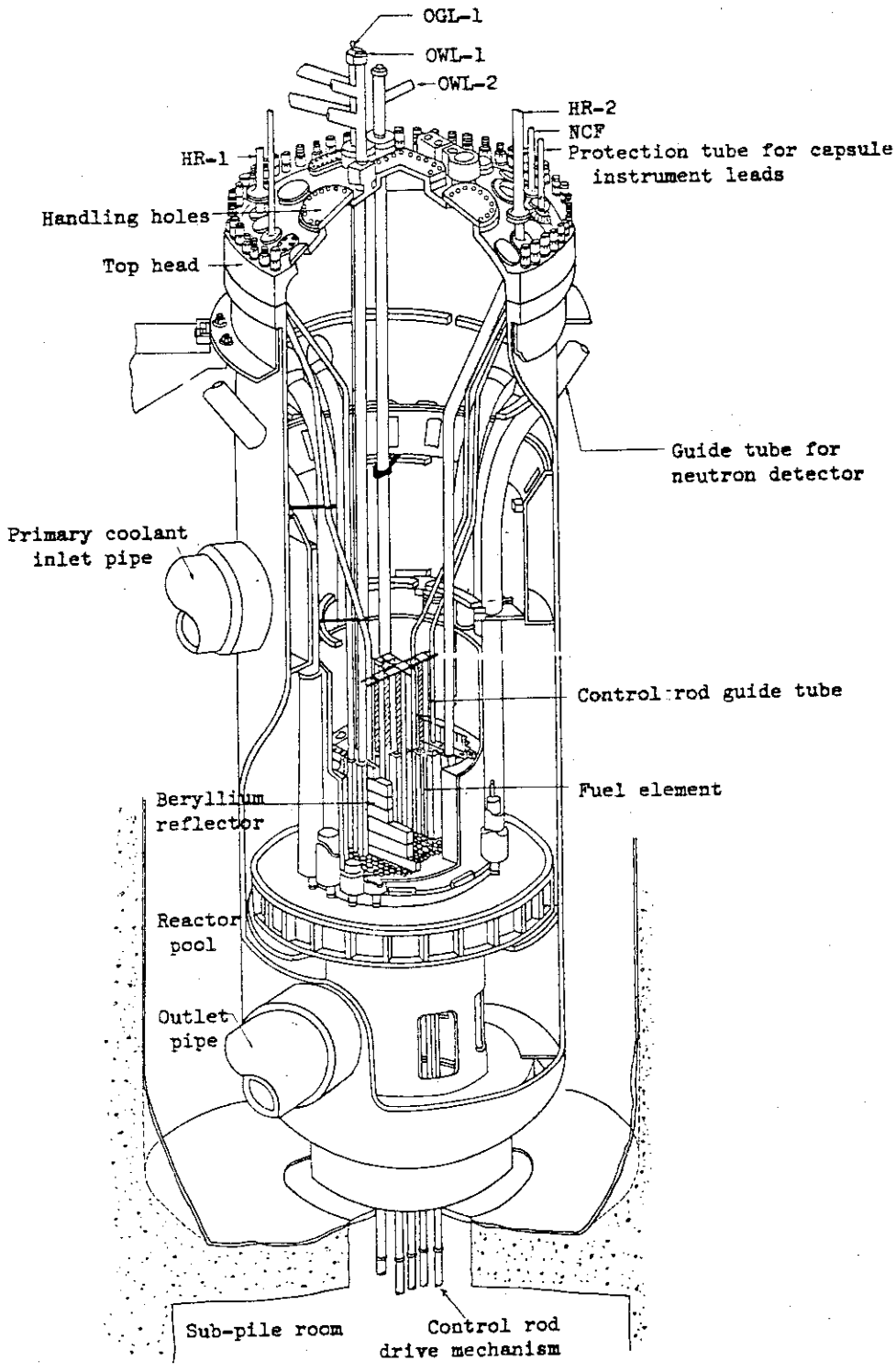

Fig. 2.1.2 Cutaway View of Internals of the JMTR Reactor Vessel

2.2 Operating schedule

The operating mode of the JMTR is a 26-day operation (one cycle) followed by a shut down work.

Main shut down works are refueling, installation and reloading of the irradiation facilities, and maintenance on the reactor and the facilities. The shut down works needs 4 weeks generally. Additional 2 weeks in spring and 12 weaks in summer are required for annual inspection according to the national reactor regulation. Another 10-day shut down is scheduled for the new years holiday.

A 26-day operation, with 2-day mid shut down work for refueling, produces a integral power of about 1050 MWD. Averaged integral power annually produced is 4725 MWD.

Eight fresh elements containing 279g of 235-U, ten falf cycle used elements containing about 245g of 235-U and four one cycle used elements containing about 210g of 235-U are loaded into the core at the beginning of the operation to obtain a relatively uniform neutron flux and enough reactivity for operation. During the mid shut down, ten elements containing 245g of 235-U at the beginning are replaced by fresh elements and four elements containing about 210g of 235-U at the beginning are replaced by other one cycle used elements for futher operation.

In case of unscheduled shut down during operation, the reactor can not restart within 40-50 hours, if a restart up within 15-30 minutes have been failed, due to a Xenon build up.

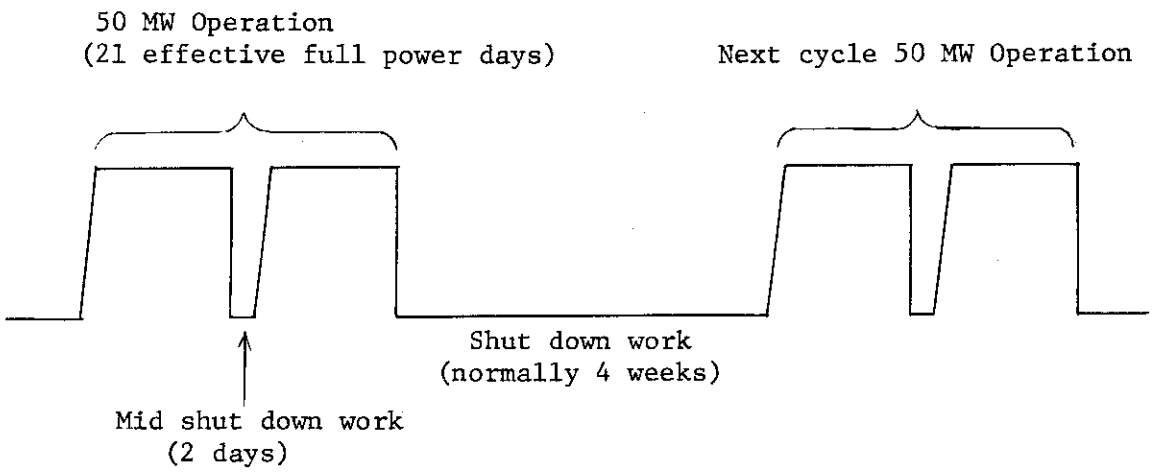

Fig. 2.2.1 Standard Operation Schedule of the JMTR

Table 2.2.1 Standard Fuel Loading in the JMTR Core

C		B	F	B		C
B	A		A		A	B
A	F	B	F	B	F	A
B	A		A		A	B
C		B	F	B		C

At begining of a cycle

C		A	F*	A		C
A	B		B		B	A
B	F*	A	F*	A	F*	B
A	B		B		B	A
C		A	F*	A		C

After refueling during mid shut down work

note
A; Fresh fuel element
B; Half cycle used fuel element
C; One cycle used fuel element
F; Fresh fuel follower
F*; Half cycle used fuel follower

2.3 Neutron flux and spectra

Typical thermal and fast neutron flux distribution at 50 MW are shown in Fig. 2.3.1. Neutron flux for each operation is calculated by complex neutronic code in advance to loading. Nuclear heating or neutron fluence for each experiment can be estimated with this calculated flux. Proposed loading may be changed if a results of the estimation could not satisfy a requirement of the experiment.

Neutron flux distribution is changed as the operation proceeds due to mainly control rod movement. Horizontal distribution is relatively unchanged during operation except for one day after start up. However, vertical distribution is considerably changed. Fig. 2.3.2. show a change of vertical distribution accompanied with control rod movement.

Neutron spectrum in the fuel region and beryllium reflector region are shown in Fig. 2.3.3. Neutron flux in the core is presented in energy integral basis. So-called fast neutron flux contains neutrons having energy above 1 MeV and thermal neutrons having below 0.625 eV. Table shows spectrum indices, which are used to obtain fast neutron flux having lower limiting energy below 1 MeV.

Fluence monitors, such as Fe wire for fast neutron and Co-Al alloy wire for thermal neutron are placed in irradiation facility close to specimen when exact fluence are desired.

Neutron flux measurements are carried out in the JMTRC for some special experiments, which calculation can not give precise and/or detail neutron flux distribution. The JMTRC is a nuclear mock up of the JMTR and is located in the same building.

SPECTRUM INDICES

Region	$\frac{\phi(>0.1\ \text{MeV})}{\phi(>1.0\ \text{MeV})}$	$\frac{\phi(>0.18\ \text{MeV})}{\phi(>1.0\ \text{MeV})}$
Fuel Region	2.00	2.02
Be-1 Reflector	2.31	2.08
Be-2 Reflector	2.62	2.29
Al-1 Reflector	2.77	2.44
OGL-1 Loop	2.80	2.48

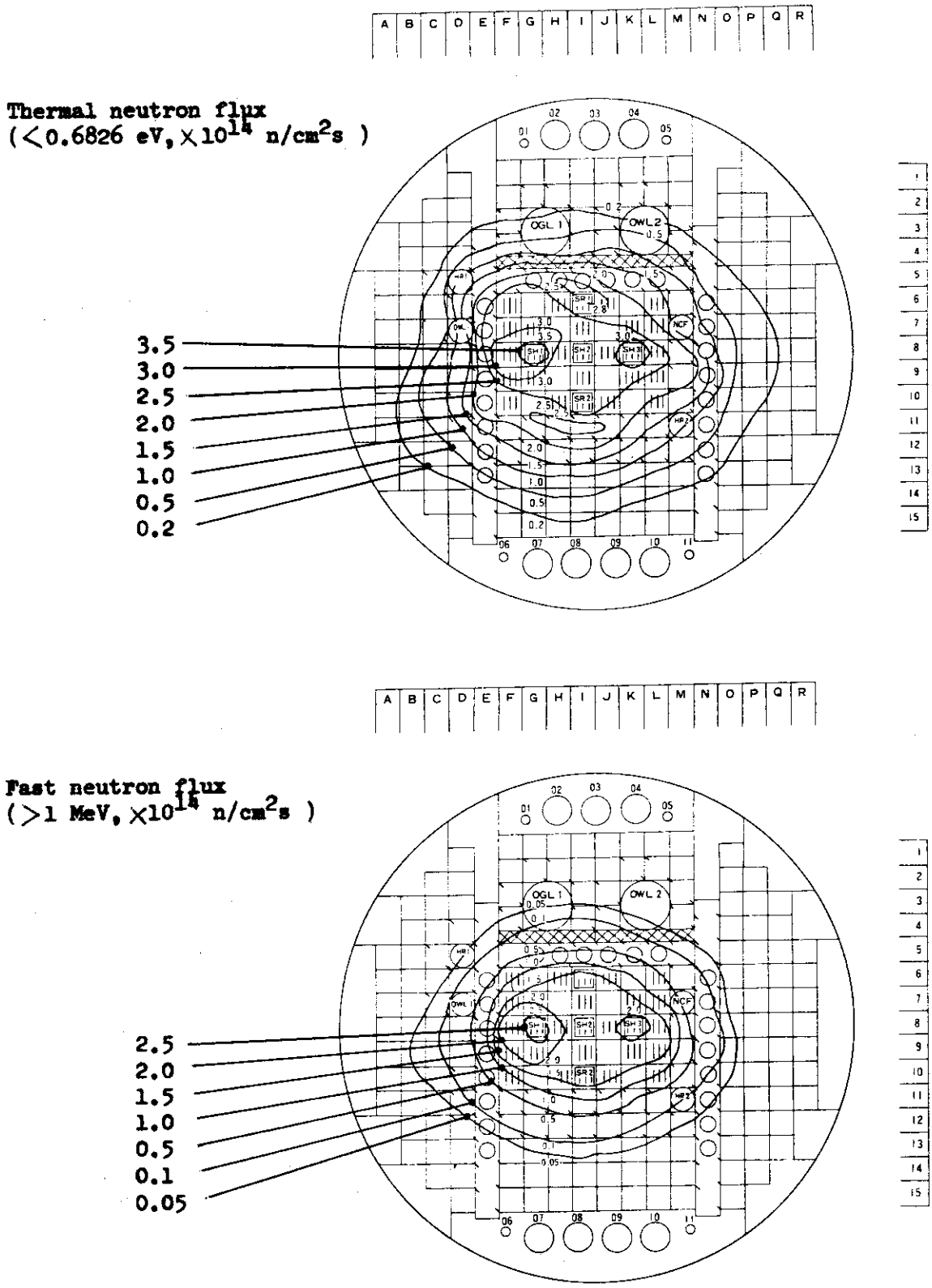

Fig. 2.3.1 Typical Neutron Flux Distribution in the JMTR Core (vertically averaged)

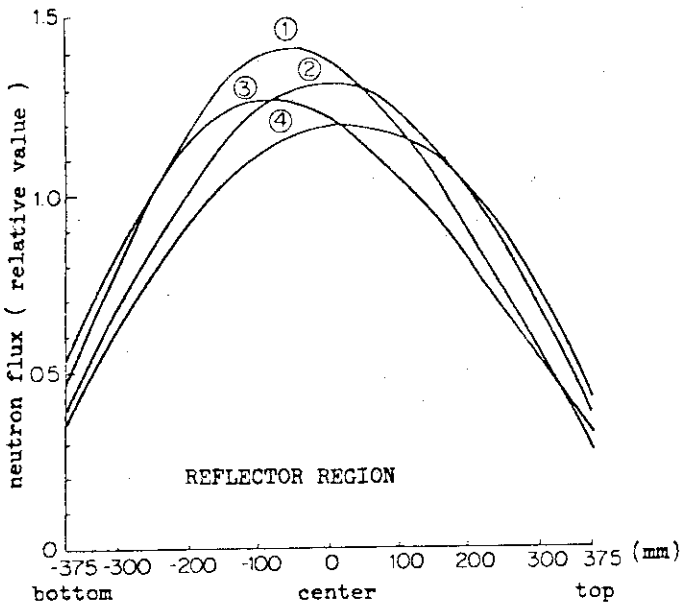

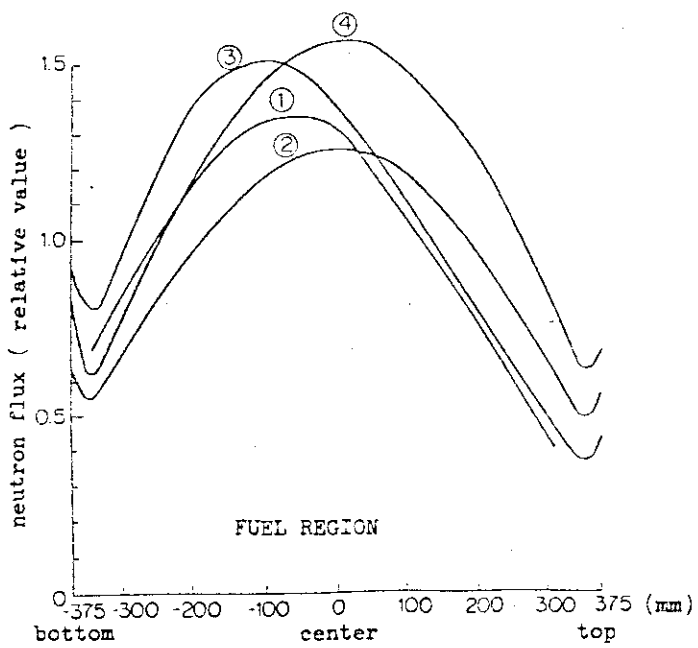

NOTE
curve 1; just after start up
curve 2; start of 50 MW operation
curve 3; half withdrawal of center rod
curve 4; all rods full withdrawal
all curves are normalized to a vertically averaged value at start of 50 MW operation.

Fig. 2.3.2 Variation of the Vertical Neutron Flux Distribution during the operation

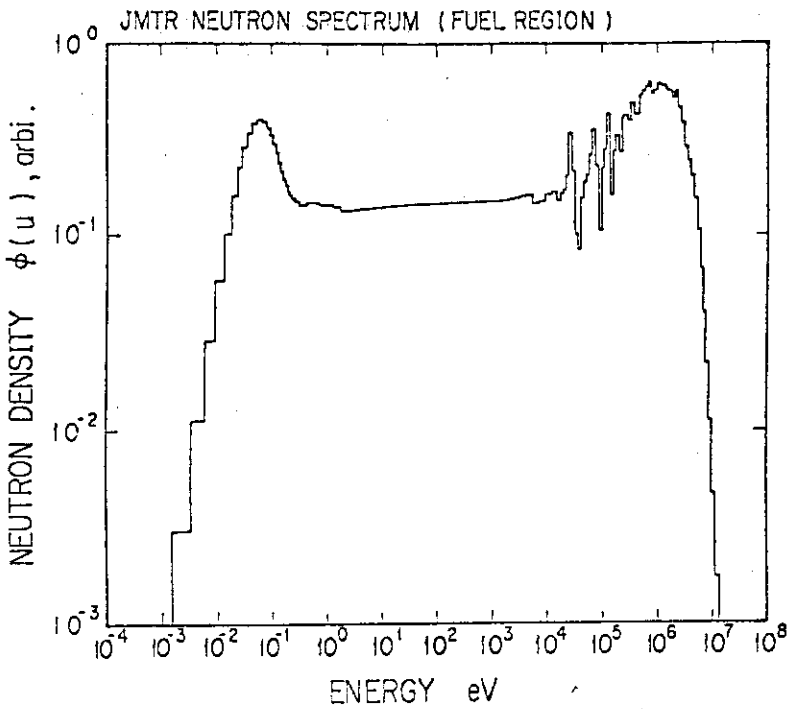

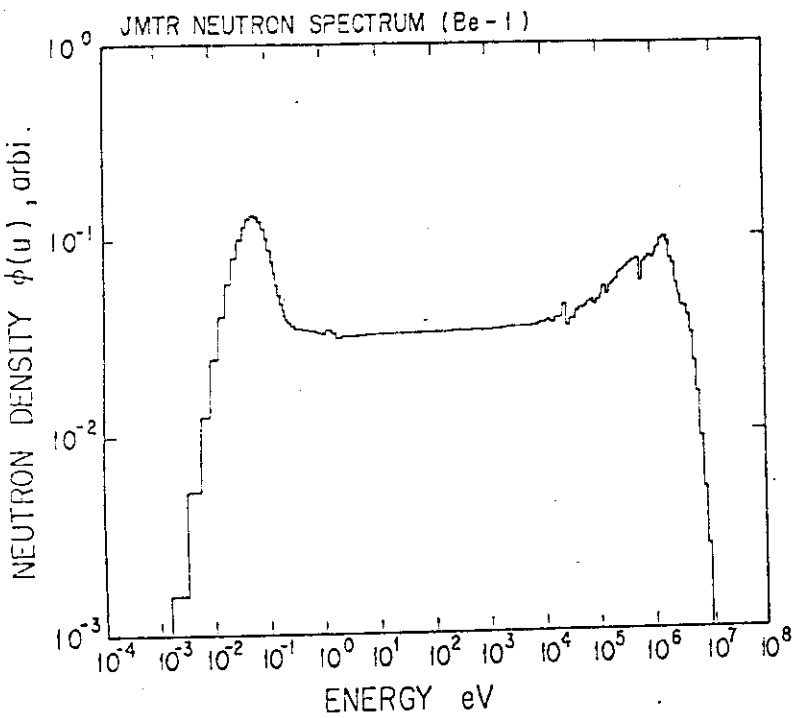

Fig. 2.3.3 Neutron Spectrum in the JMTR Core

2.4 Hot laboratory

The hot laboratory of the JMTR, adjacent to the reactor building and connected with a water canal, have been in operation since 1971. The laboratory has a capability with a wide variety of work such as dismantling of irradiated capsule and loop assembly, post irradiation examination of fuels, and post irradiation testing of structural materials.

The concrete caves, mainly used for dismantling and fuel examination, are equipped with cutters and saws, milling machine, welder, press, apparatus for dimensional measurement, stereo scope, peri scope, X ray apparatus, gamma scanner, liquid metal disposer, FP gas analyzer, eddy current tester, profilometer and microscopes.

The lead cells, used for material testing, are equipped with tensile, compression and bend test machines, Sharpy impact tester, pipe rupture test facility, hardness tester, microscopes and furnace for heat treatment. An electron probe micro analyzer with shielded beam tube has been recently installed in the hot laboratory.

Another 5 iron shielded cells were completed in June of 1982 and will be equipped with PCI-SCC tester for LWR fuel cladding, creep machine and etc..

The hot laboratory can accept materials irradiated not only in the JMTR but also in other reactors. Foreign materials are loaded through top openning of the cave.

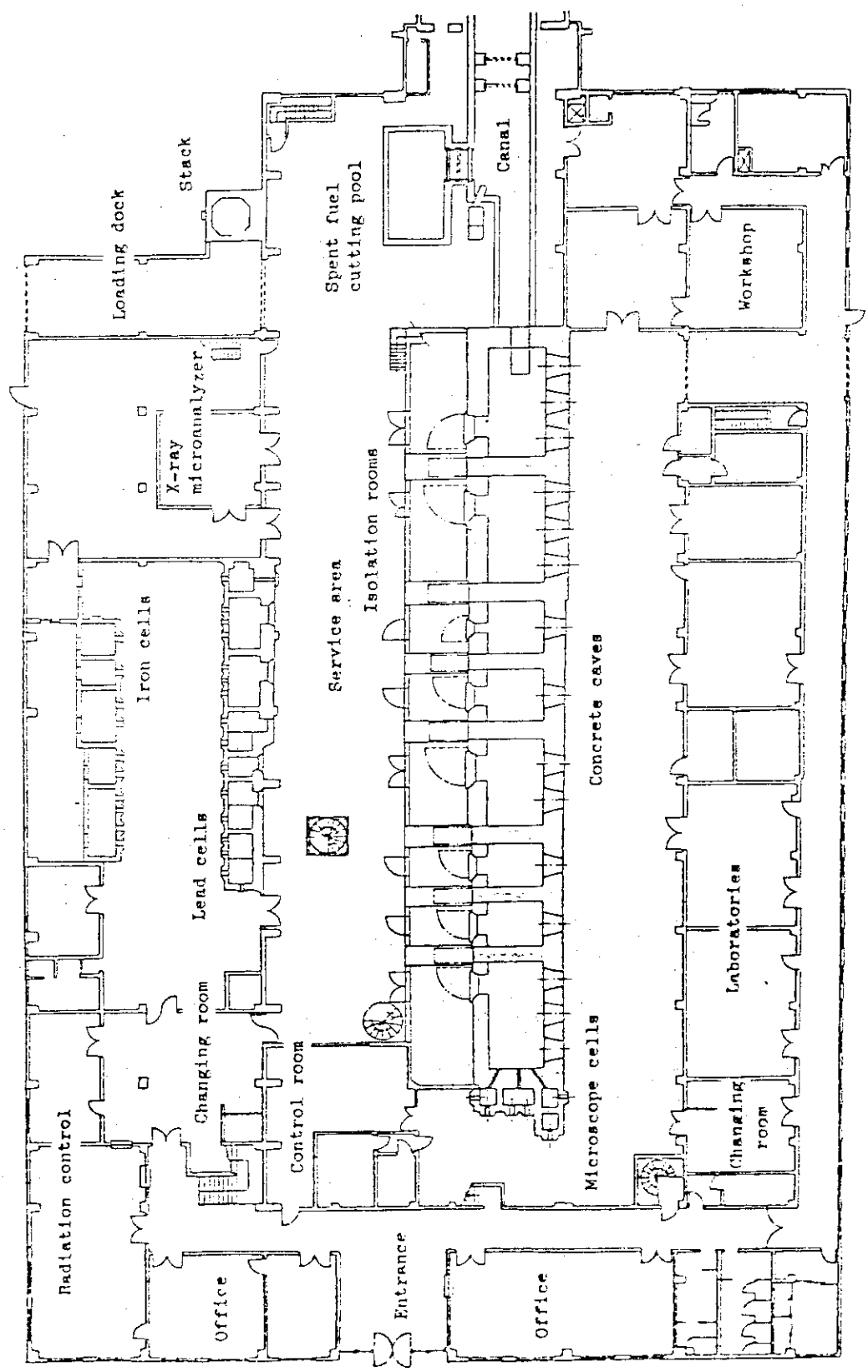

Fig. 2.4.1 Floor Plan of the Hot Laboratory

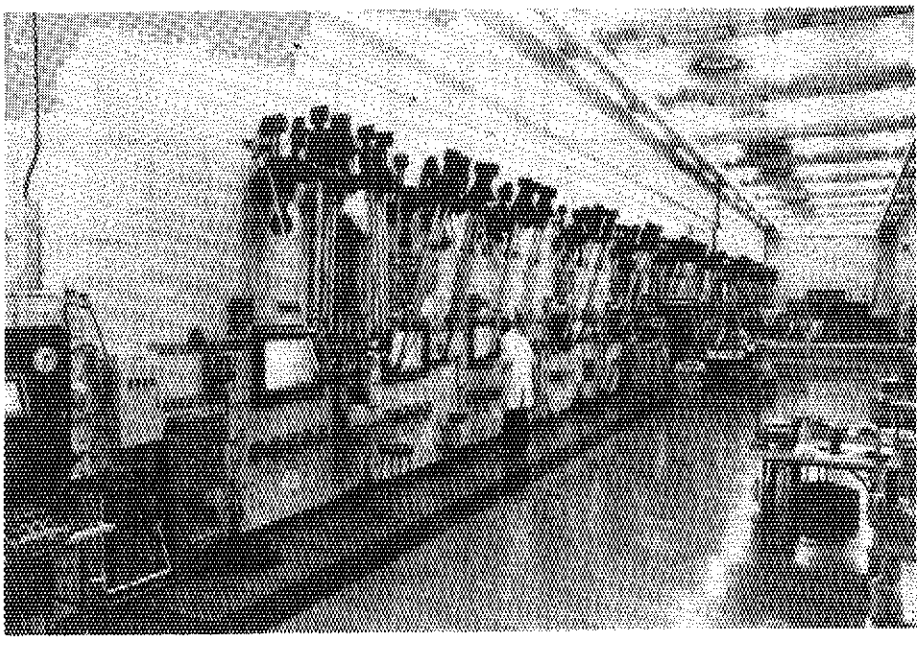

Fig. 2.4.2 Concrete Caves

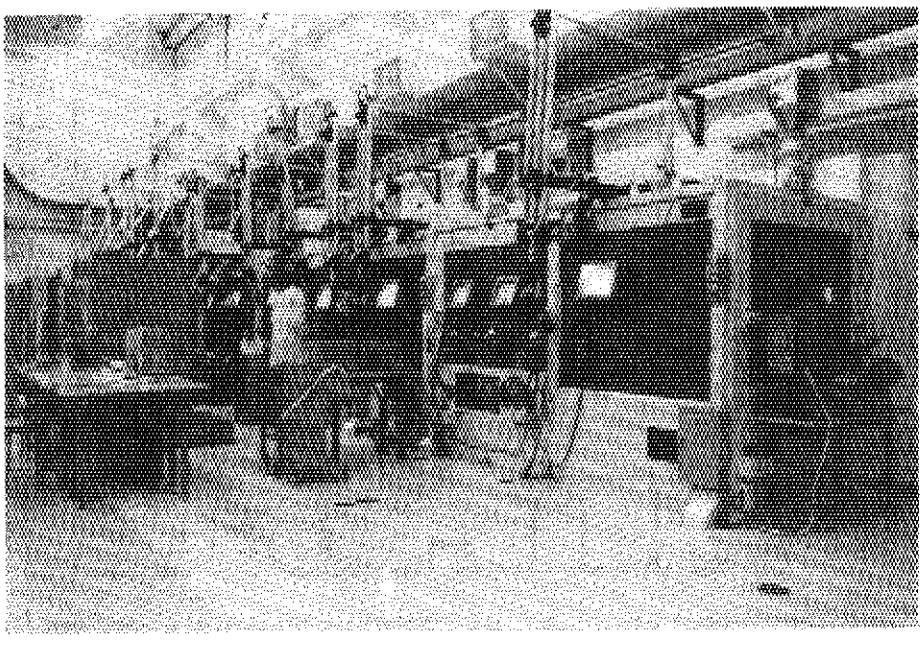

Fig. 2.4.3 Lead Cells

Table 2.4.1 Working Flow Diagram of the Post-Irradiation Examinations

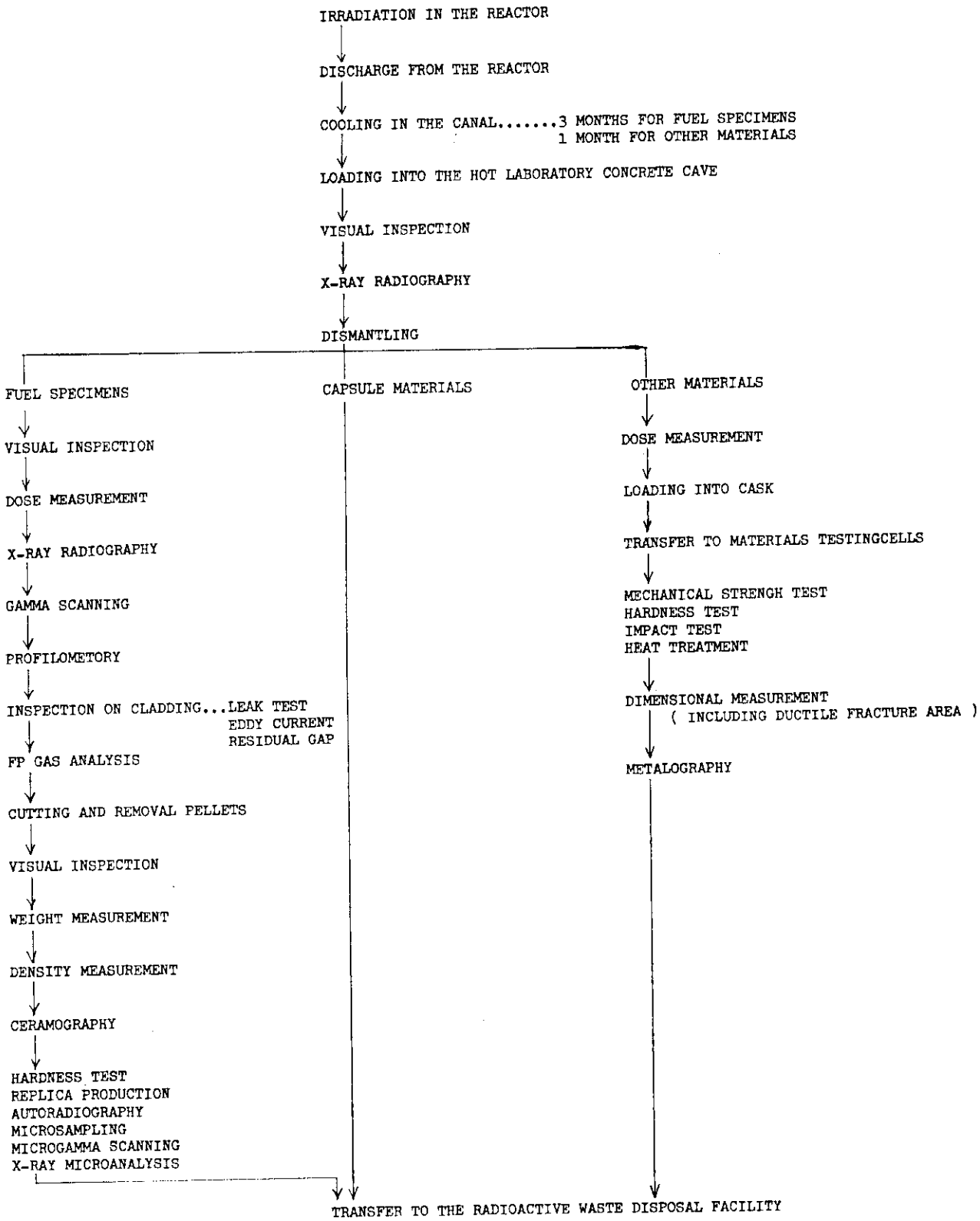

3. Capsules

3.1 Low temperature irradiation test

Some materials, such as a target for a production of neutron sources (ex. Sb-124) and surveillance test specimens, are irradiated at coolant temperature (50°C).

Test pieces/specimens are held in an open-type basket made of aluminum, which is loaded in a core, and cooled directly by reactor coolant. This type is so called "Leaky capsule" which is the simplest capsule in JMTR. All the parts in the capsule, which comes in contact with coolant, should not be corrosive or high potential materials such as Cu, Ag, etc. in order to avoid the injury to the reactor fuels covered by aluminum and the increase of coolant activities.

Characteristics of the low temperature irradiation capsule are shown in the table.

Characteristics

Item	Specification
Outer diameter of capsule	29.2, 35.2, 31.4 and 41 mm
Active diameter for specimens	23.7, 36 mm
Active length for specimens	750, 850 mm
Irradiation temperature	50 – 100°C
Coolant pressure	14 $kg/cm^2 \cdot G$
Neutron flux	max. 3×10^{14} $n/cm^2 \cdot sec$ (<0.625 eV) max. 2×10^{14} $n/cm^2 \cdot sec$ (>1 MeV)

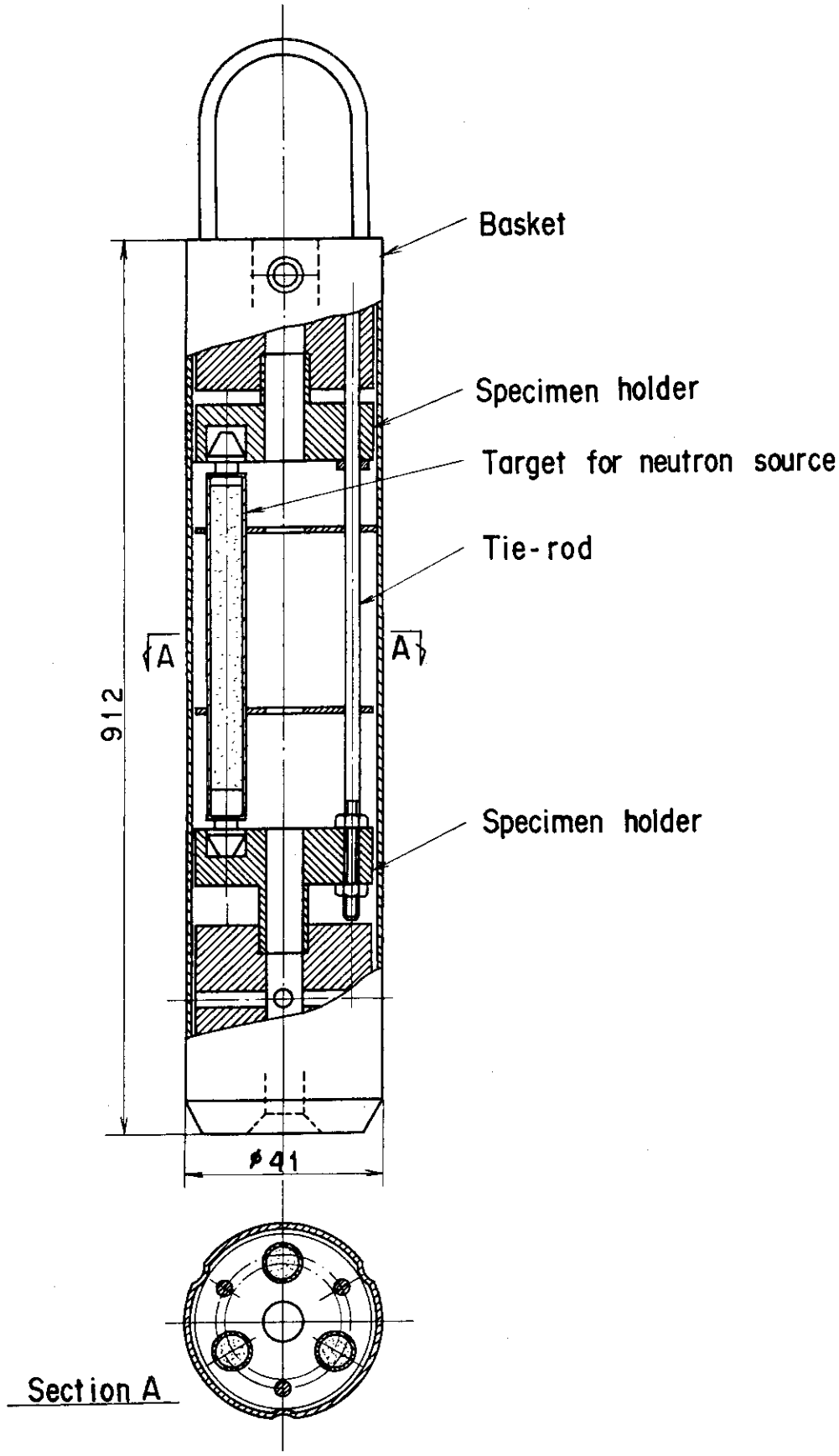

Fig. 3.1.1 Neutron source production capsule

3.2 Radio-isotope production

JMTR is a suitable reactor for production of radio-isotopes due to the high thermal and fast neutron flux. Radio-isotope production occupies about 25% of irradiations in JMTR. The following table shows radio-isotopes produced by using open baskets, aluminum capsules and hydraulic rabbits.

Radio-isotope	Target		Reaction	Half life	
^{32}P	S	30 g	^{32}S (n,p)	14.3 d	For medical use
^{35}S	KCℓ	3 g	$^{35}C\ell$(n,p)	87.9 d	
^{51}Cr	Cr	5 mg	^{50}Cr(n,γ)	27.8 d	
^{60}Co	Co	1.5 g	^{59}Co(n,γ)	5.26 y	
^{198}Au	Au	1.5 g	^{197}Au(n,γ)	2.69 d	
^{14}C	AℓN	175 g	^{14}N (n,p)	5730 y	For industrial use
^{35}S	KCℓ	3 g	$^{35}C\ell$(n,p)	87.9 d	
^{63}Ni	Ni	3 g	^{62}Ni(n,γ)	92 y	
^{115m}Cd	Cd	0.5 g	^{114}Cd(n,γ)	43 d	
^{170}Tm	Tm_2O_3	0.3 g	^{169}Tm(n,γ)	134 d	
^{192}Ir	Ir	36 g	^{191}Ir(n,γ)	74.2 d	
^{45}Ca	$CaCO_3$	10 mg	^{44}Ca(n,γ)	165 d	For other uses
^{58}Co	Ni	1 g	^{58}Ni(n,p)	71.3 d	
^{65}Zn	Zn	20 mg	^{64}Zn(n,γ)	245 d	

a) Open basket

Middle lived radio-isotopes: such as phosphorous 32, chromium 51 and iridium 192, are produced by using the open baskets. Maximum five aluminum capsules carring targets for radio-isotopes loaded in an aluminum basket are irradiated in the reflector and/or fuel regions. The capsules in the open type basket are cooled directly by the primary reactor coolant. Characteristics of the open basket type capsules are as follows.

Characteristics

a) Open basket in fuel regions (Figure 3.2.1)

— producted radio-isotope	phosphorus 32
— target nuclide	sulpher 32
— outer diameter of open basket	29.2 mm
— available length in open basket	750 mm
— outer diameter of aluminum capsules loaded in the open basket	25.7 mm
— length of aluminum capsule	134 mm
— maximum number of capsules loaded in an open basket	5 capsules
— center line temperature of capsules adjusted by regulation of their axial positions in the open basket	max. 444°C (boiling point of sulpher)
— neutron flux	3×10^{14} n/cm^2·sec(>1 MeV)

b) Open basket in reflector region (Figure 3.2.2)

— producted radio-isotopes : iridium 192, chromium 51 and others

— target nuclide : iridium 191, chromium 50 and others

— outer diameter of open basket : 41 mm

— available inner length in open basket : 850 mm

— outer diameter of aluminum capsules loaded in open basket : 34 mm

— length of aluminum capsules : 150 mm

— maximum number of capsules loaded in a open basket : 5 capsules

— neutron flux : 2.5×10^{14} n/cm^2·sec (<0.625 eV)

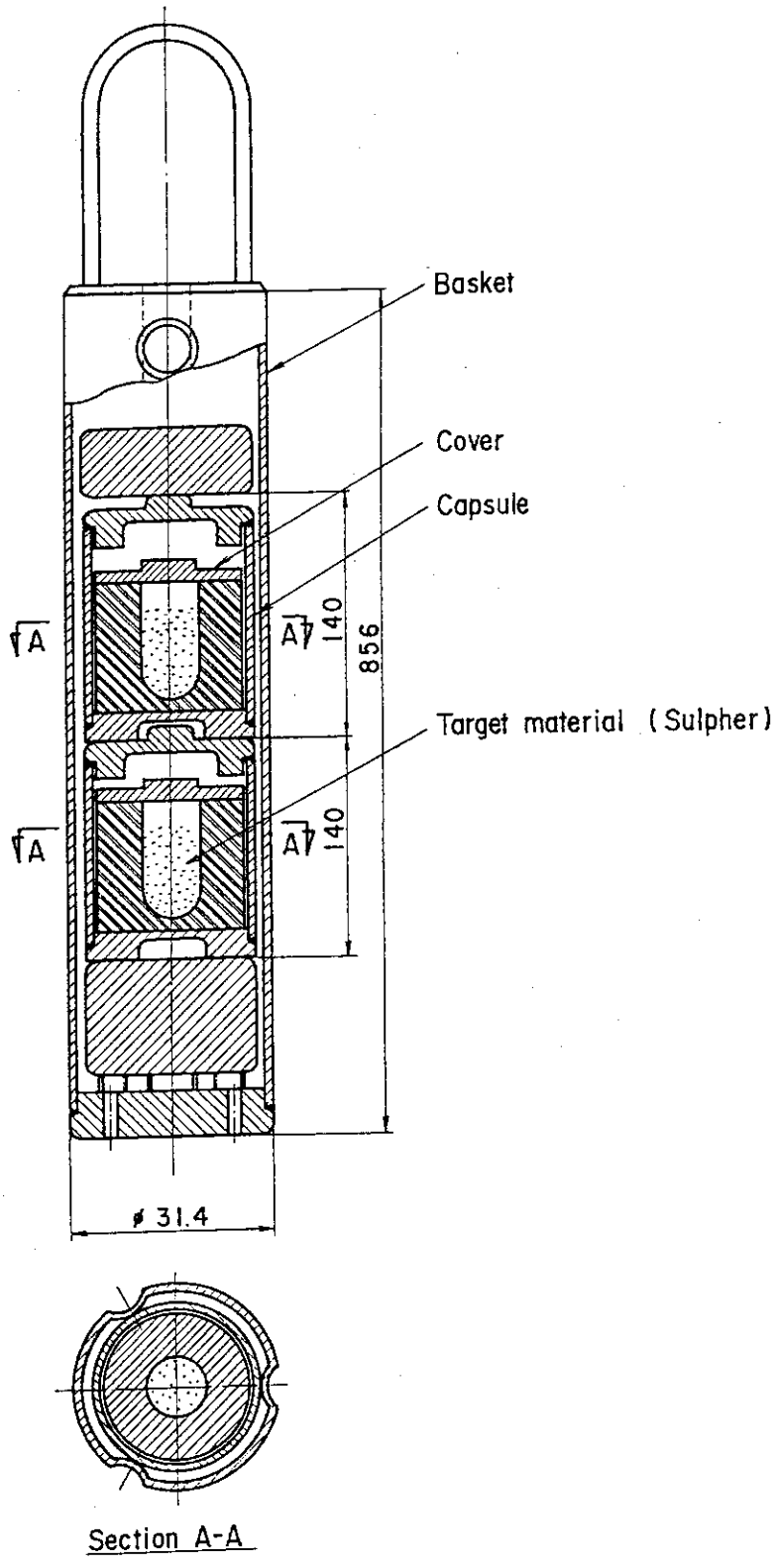

Fig. 3.2.1 Radio-isotope production capsule (open basket type)

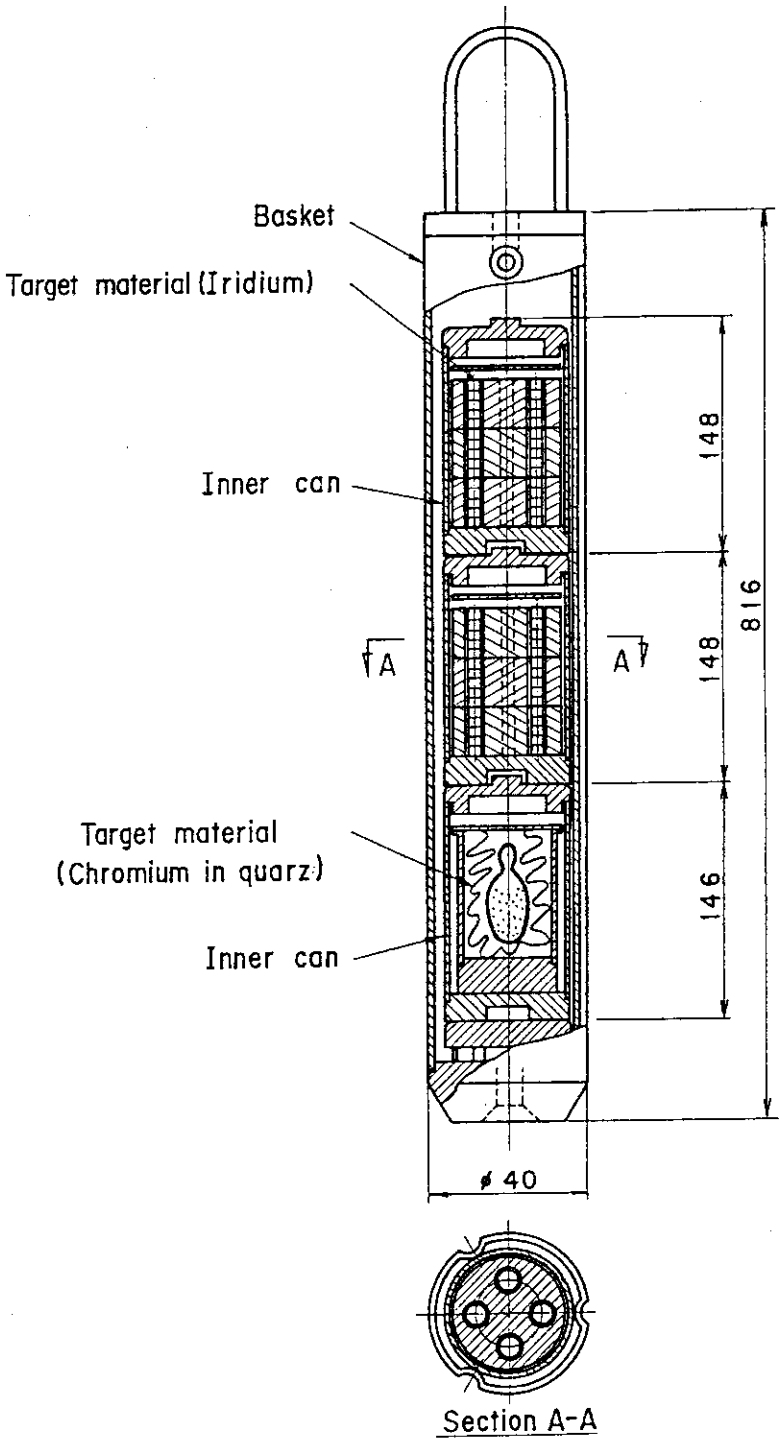

Fig. 3.2.2 Radio-isotope production capsule (open basket type)

b) Capsule type

Five aluminum inner capsules that hold pelleted targets of aluminum nitride (AlN) for production of carbon 14 are enveloped in an aluminum capsule. Capsules are irradiated in the fuel and/or reflector region in the reactor core. The inner capsules are designed to sustain sufficient mechanical strength to endure pressure increase due to gas generation from AlN during irradiation (Fig. 3.2.3). Characteristics are shown in the table.

Characteristics

Item	Specification
Outer diameter of capsule	30 mm (in fuel region) 35 mm (in reflector region)
Outer diameter of inner capsule	23.2 mm (in fuel region) 28.2 mm (in reflector region)
Length of inner capsule	134 mm
Number of inner capsules loaded in the capsule	5
Neutron flux	$0.5 - 2\times10^{14}$ n/cm^2·sec (>1 MeV)

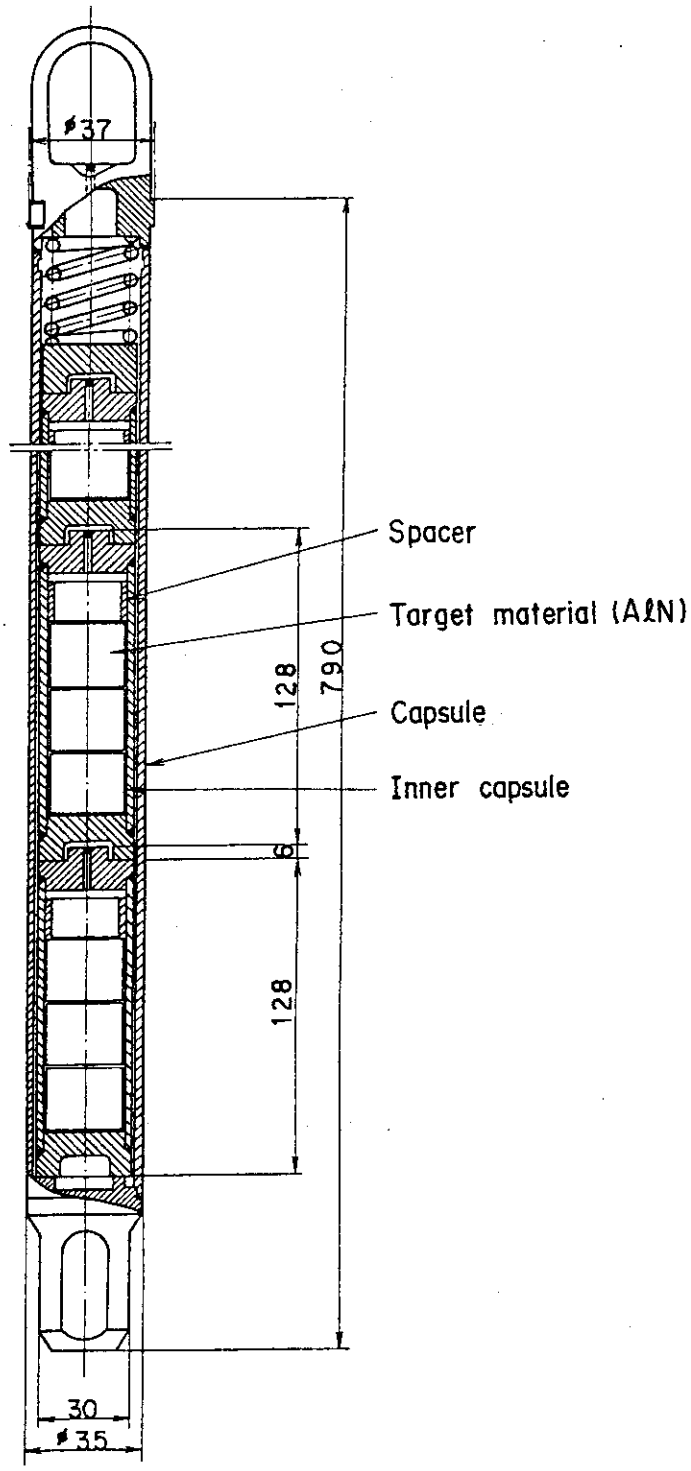

Fig. 3.2.3 Radio-isotope production capsule (capsule type)

3.3 Temperature measurement and control

The temperatures of specimens in the capsules are measured by thermocouples. In the case of measuring temperature of less than about 1100°C, the sheathed thermocouples of Chromel-Alumel (CA) have been used. In the case of measuring temperature above 1100°C, tungsten-rhenium (W/Re) thermocouples are applied, but several problems are encountered, such as durability of thermocouples themselves, their compatibility with measured objectives, drifting in their outputs with the neutron exposure.

The temperature of specimens in the capsules are controlled by vacuum method, mixing gases method and/or heater method.

The temperature control by the vacuum control method is made by means of regulating the heat transfer through the gas gap by varying degree of vacuum in the capsule. The flow diagram of the out-of-pile control equipment is shown in Fig. 3.3.1(a). In some cases, the purified helium gas in a plenum volume in the capsule is directly evacuated from the surroundings of specimens through an evacuation tube connected to the out-of-pile control system. Thermocouples are inserted in the specimens or dummies for measuring and controlling temperature.

The temperature control by mixing gases is carried out similarly to the vacuum control method, by varying the composition of mixed gases of helium and nitrogen to regulate the heat transfer through the gas gap. The flow diagram of the system is shown in Fig. 3.3.1(b). This method is used not only for temperature control, but also for keeping the helium gas pure by constant sweeping of the gas during irradiation, because a capsule has sometimes special specimens, e.g. concrete blocks, which vapor gases.

The temperature control using the electric heaters are made by regulating the electric power of sheathed electric heaters wound on the heat diffuser holding the specimens in the capsule. This controlling method is occasionally used together with the vacuum controlling method in order to regulate the temperature at specimens more finely.

The vacuum temperature controllers and heater temperature controllers are shown in Fig. 3.3.2 and 3.3.3, respectively.

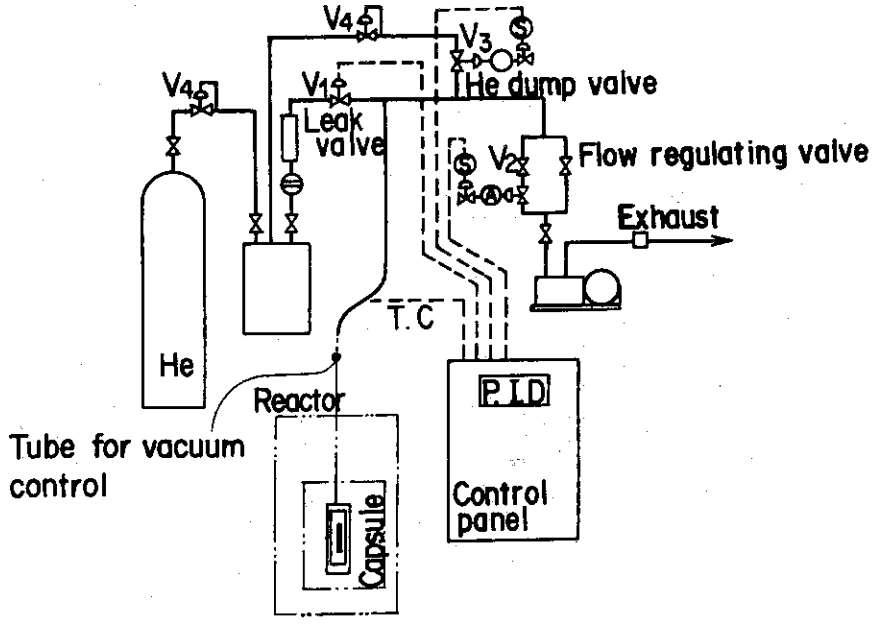

(a) Vacuum controlling method

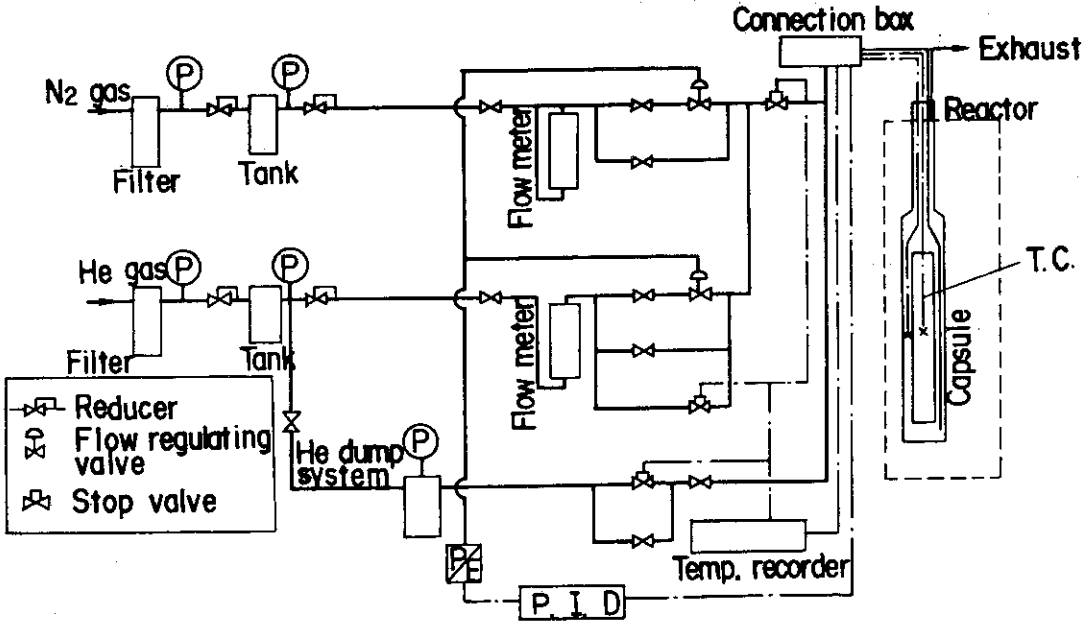

(b) Mixing gas controlling method

Fig. 3.3.1 Flow diagram of vacuum and mixing gas controlling method

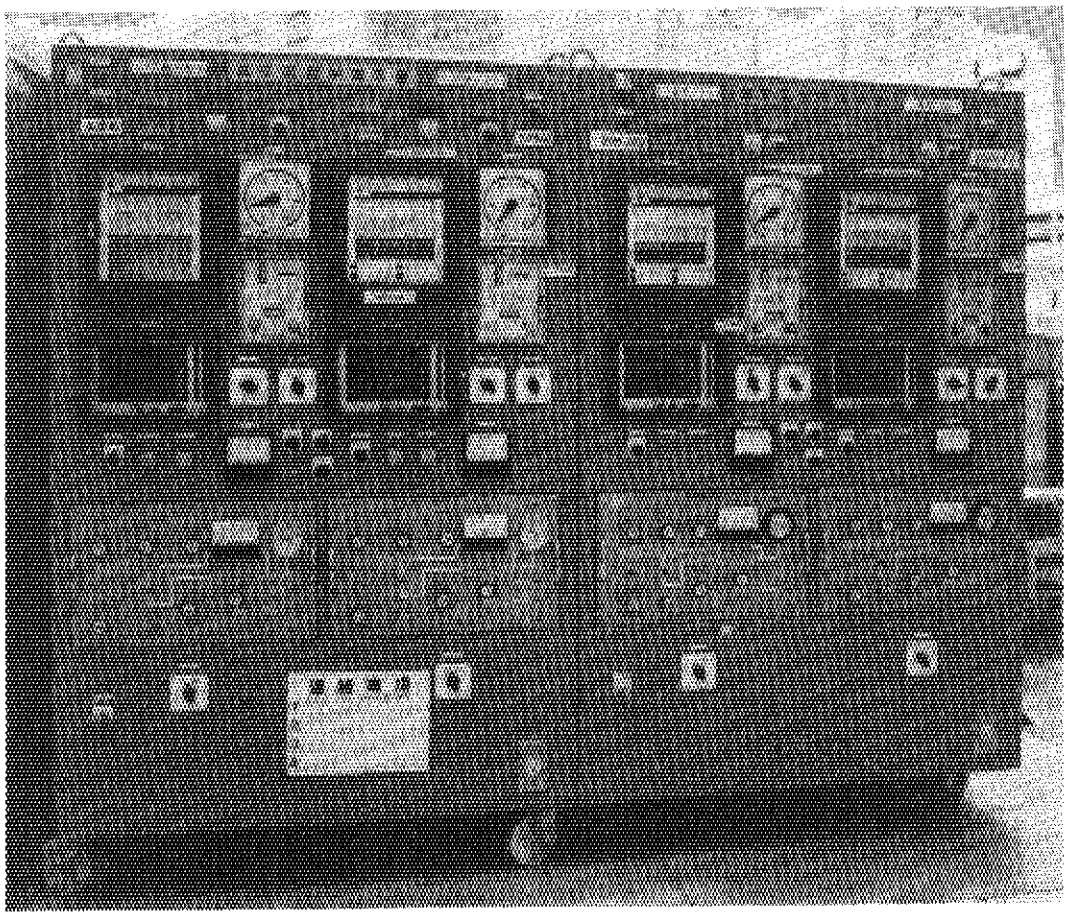

Fig. 3.3.2 Vacuum Temperature Controllers

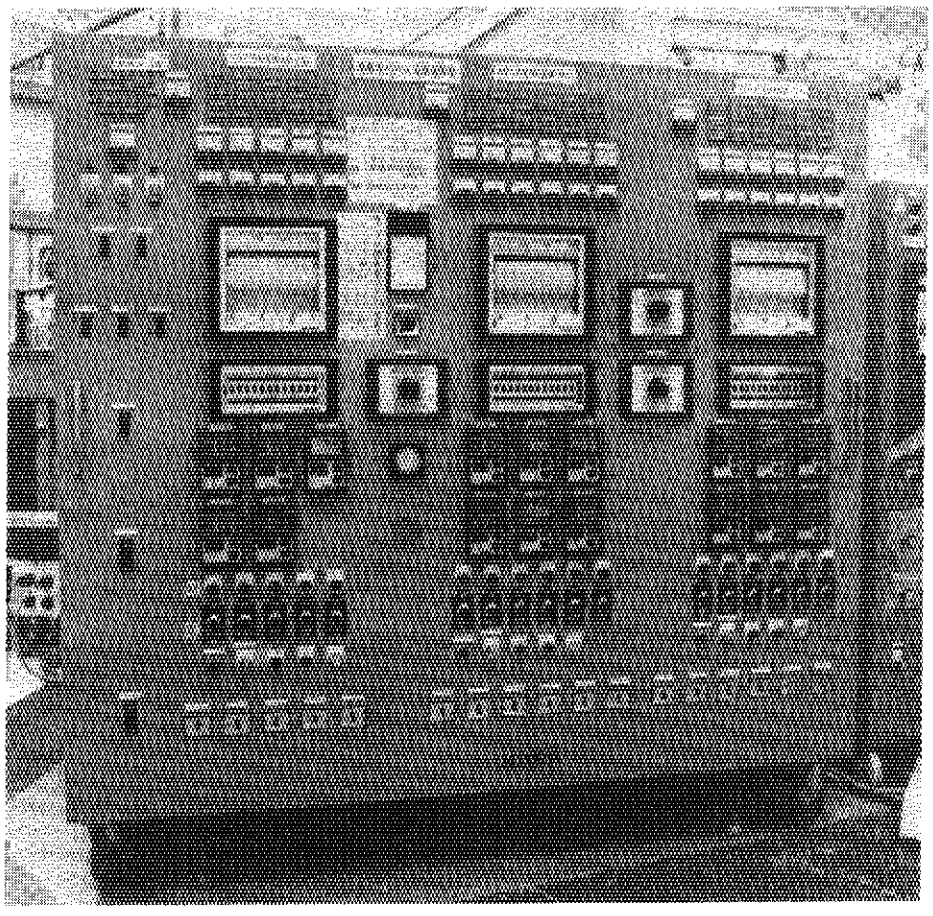

Fig. 3.3.3 Heater Temperature Controllers

3.4 Reactor vessel steel irradiation

Specimens for the Charpy impact test, tensile test, compact tension test and other tests for pressure vessel materials of light water reactors are often required to be irradiated at the temperature of about 290°C with an accuracy of ±10°C. Since the axial distribution of gamma heating rate along the reactor core is not uniform and gamma heating varries during irradiation, several irradiation techniques are applied to maintain the temperature of specimens to be 290°C±10°C. The electric heater controlled capsule is availably used in JMTR to accomplish the requested irradiation condition. A fine temperature control can be obtained to make the axial temperature distribution uniform on specimens, by regulating electric heaters arranged along axial direction of the capsule. The vacuum controlling method is often used together with the electric heaters in order to reduce a load obliged to the heaters. The configuration of the capsule is shown in Fig. 3.4.1. Characteristics are shown in the table.

Characteristics

Item	Specification
Outer diameter of capsule	40 and 60 mm
Length of capsule	600 mm
Irradiation temperature	290°C±25°C (by vacuum control only) 290°C±10°C (by vacuum with heater control)
Neutron flux	$0.05\text{-}1\times10^{14}$ n/cm^2·sec (>1 MeV)

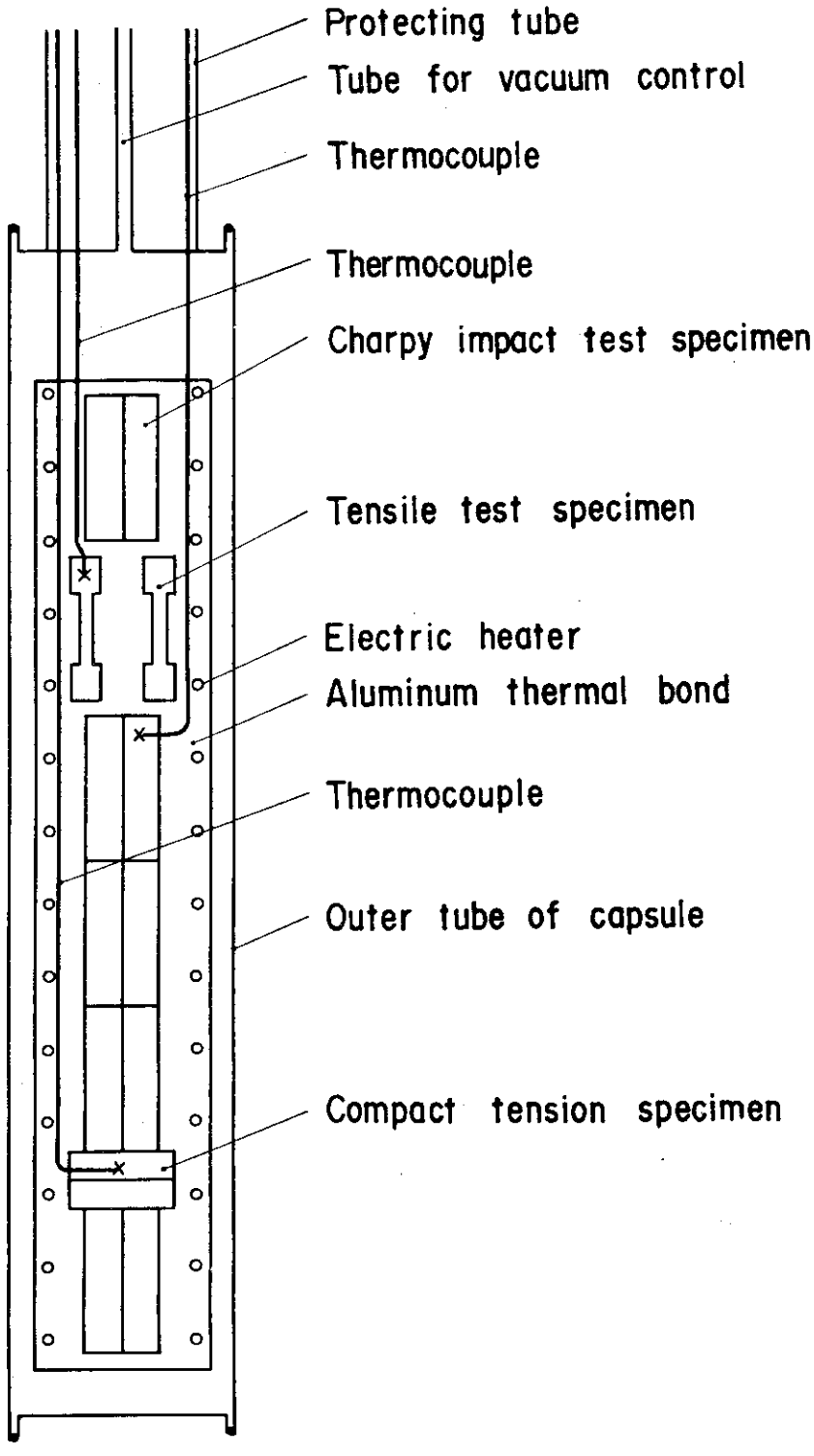

Fig. 3.4.1 Reactor vessel irradiation capsule

3.5 In-pile creep measurement

Mechanical creep rates and rupture times during neutron irradiation at elevated temperature can be measured for some reactor structural materials such as fuel cladding materials for LMFBR (ex. 316ss) and pressure piping materials (ex. Zr-2.5 % Nb) for the advanced thermal reactor (ATR).

Lower end of the specimen for creep testing is fixed to the outer tube of the capsule and the tensile force is loaded on its upper end. The pressurized bellows by helium gas pulls the specimen through the yoke. The temperature of the specimen is maintained uniform by the use of electric heater rounding the specimen. The creep strain can be obtained by the buffer and the needle type of helium micrometers shown in Fig. 3.5.1 or can be measured by a linear valiable differential transformer (LVDT). Characteristics are shown in the table.

Characteristics

Item	Specification
Outer diameter of capsule	40 mm
Tensile load on the specimen	10 - 120 Kg
Temperature at the specimen	750°C max.
Number of specimens in a capsule	3 specimens max. (for creep rupture test)
Temperature at bellows	500°C max.
Creep strain detector	
(a) buffer type helium micrometer	0 - 0.25 mm
(c) needle type helium micrometer	0 - 10 mm
(c) LVDT	0 - 10 mm
Neutron flux	$(0.5\text{-}1.0)\times10^{14}$ n/cm^2·sec(>1MeV)

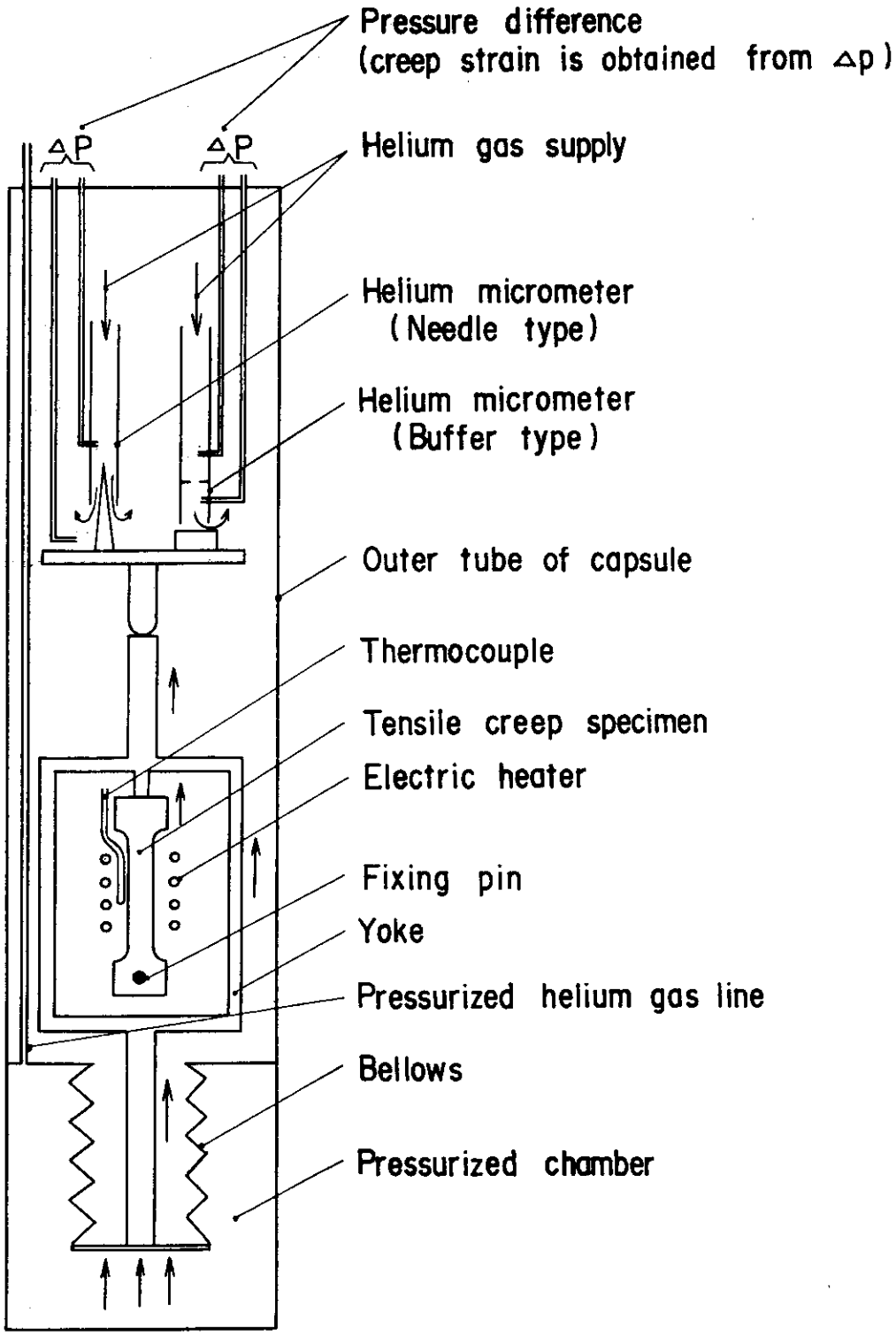

Fig. 3.5.1 In-pile creep capsule

3.6 Graphite irradiation

Graphite specimens for the high temperature gas cooled reactor (HTGR) are irradiated under unstressed or stressed conditions.

a) Graphite specimens irradiation capsule (Figure 3.6.1)

The graphite thermal bonds, surrounded by rings, that hold the graphite specimens for mechanical testings, are enclosed in the inner tube. The outer tube cooled by the reactor coolant envelopes the inner tube with a co-extruded aluminum thermal bond. The rings used as the variable gamma heaters consists of materials with various densities, such as graphite, molybdenum, niobium and tungsten. This is intending that the gamma heat generated within the inner tube along the axial direction in the capsule is about uniform, accordingly the temperature of all specimens in the capsule results in uniform. The temperature of the specimens is additionaly, regulated by adjusting thermal conduction through the gas gap between the outer and the inner tube by means of the vacuum control method. Characteristics are shown in the table.

Characteristics

Item	Specification
Outer diameter of capsule	40 mm
Available diameter for specimens	25 mm
Available length for specimens	670 mm
Irradiation temperature	800 - 1200°C
Neutron flux	$(1.0\text{-}1.5)\times10^{14}$ n/cm^2·sec (>1 MeV)

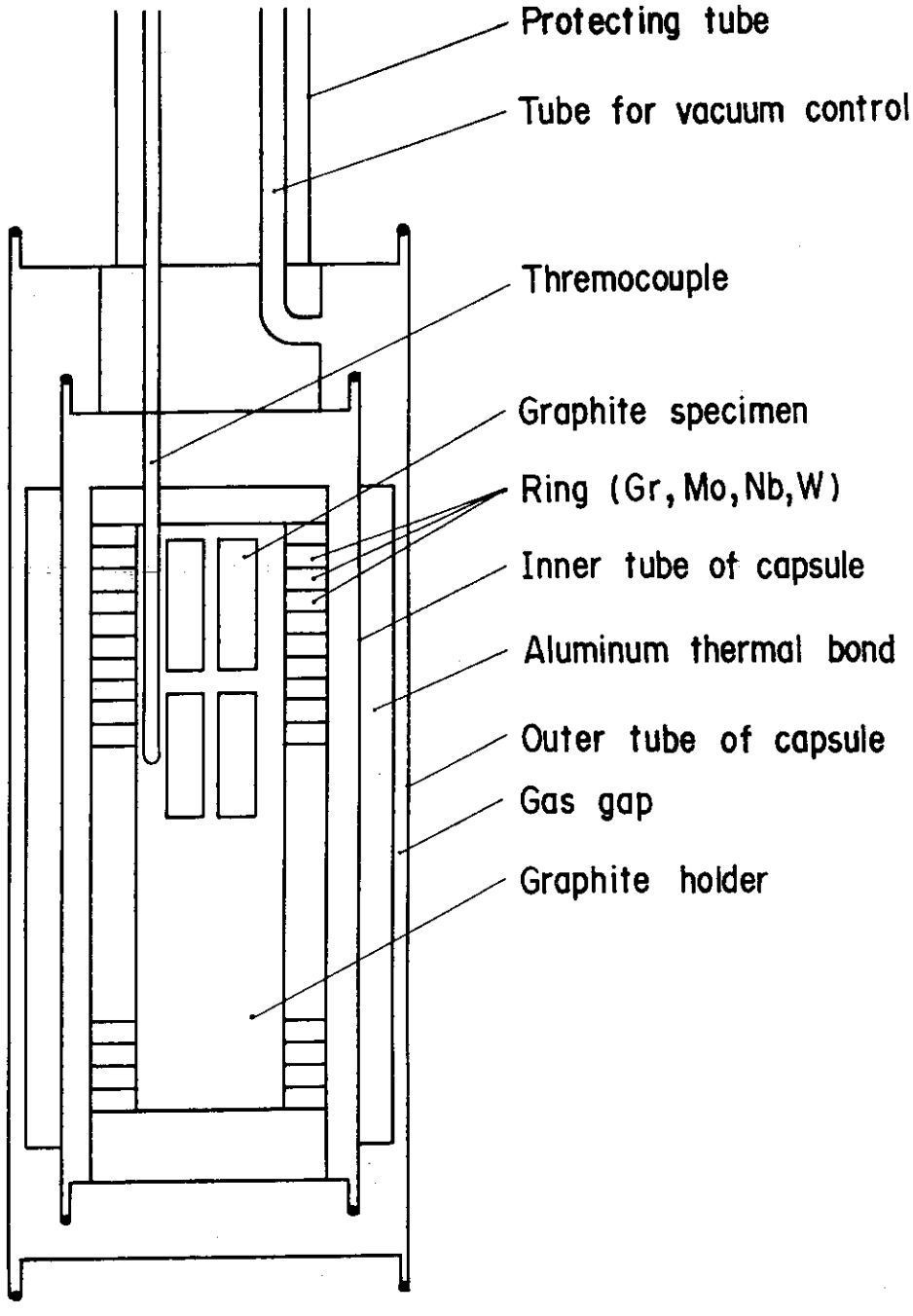

Fig. 3.6.1 Graphite irradiation capsule

b) Graphite in-pile creep capsule (Fig. 3.6.2)

Several graphite specimens pin-jointed axially with each other in a capsule are stressed by the pressurized bellows. The temperature of the specimens is controlled by adjusting the electric output of the heaters turned around the specimens. The creep strain is measured by the helium micrometer or the linear variable differential transformer (LVDT). Characteristics are shown in the table.

Characteristics

Item	Specification
Outer diameter of capsule	40 mm
Tensile load on the specimens	10 - 120 kg
Temperature at the specimens	850 - 950 °C
Number of specimens in a capsule	7 specimens (for creep rupture test)
Creep strain detector	
(a) buffer type helium micrometer	0 - 0.25 mm
(b) needle type helium micrometer	0 - 15 mm
(c) LVDT	0 - 15 mm
Neutron flux	$(1.0\text{-}1.5)\times10^{14}$ n/cm^2·sec (>1 MeV)

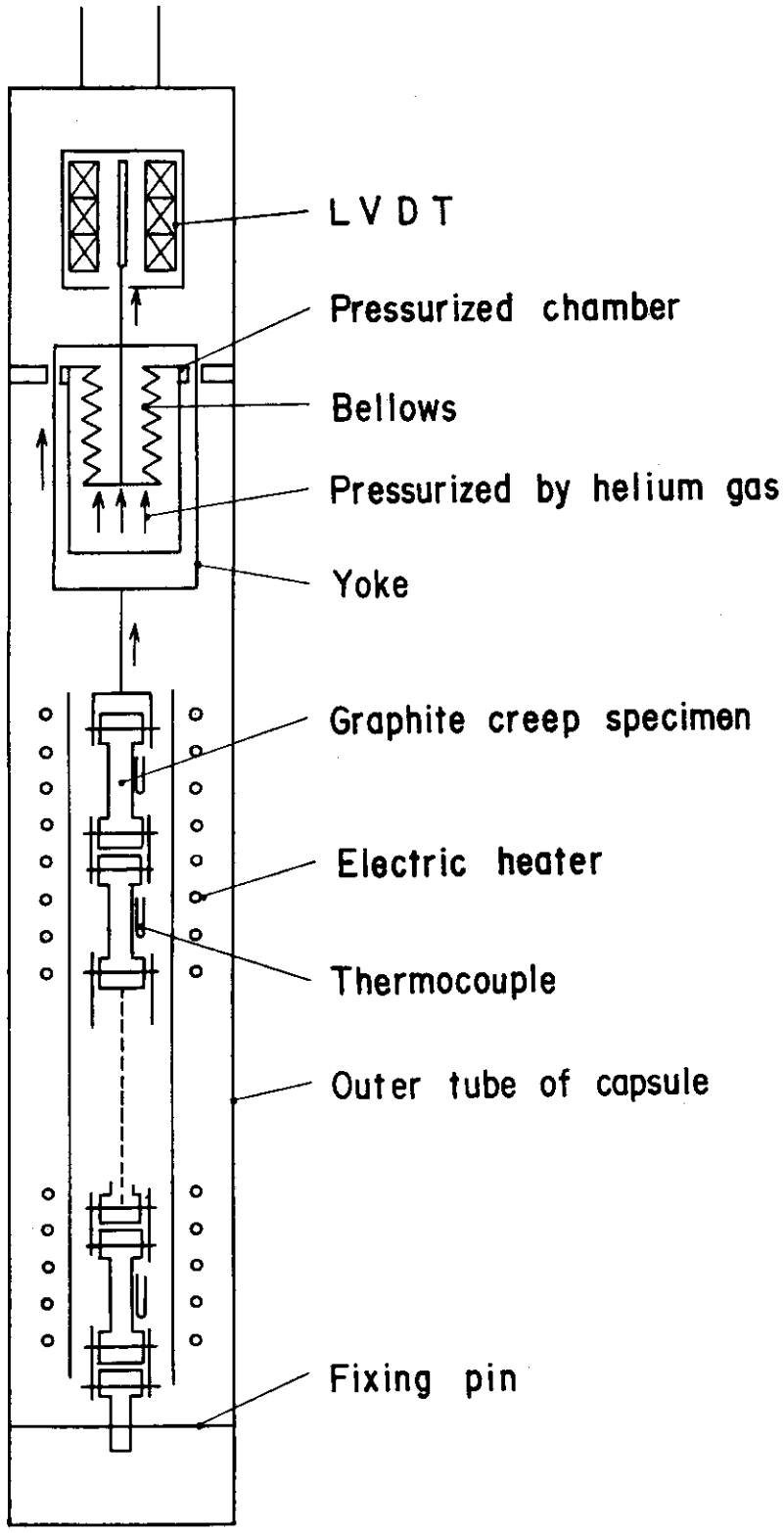

Fig. 3.6.2 Graphite in-pile creep capsule

3.7 Coated particle fuels irradiation

(a) Coated particles fuel irradiation capsule (Figure 3.7.1)

Coated particle fuels for the high temperature gas cooled reactor (HTGR) are irradiated for investigating behaviors of the fuels at high temperature (maximum 1600°C).

The coated particle fuels or compacted coated particle fuels with graphite matrix are enclosed in the inner tube of stainless steel that is contained in the outer tube also of stainless steel. The high temperature is obtained at the specimens by the large temperature gradient across the gas gap between the inner and outer tube by means of the vacuum control method. The tungsten-rhenium thermocouples are used for measuring and controlling the temperature of specimens. Characteristics are shown in the table.

Characteristics

Item	Specification
Outer diameter of capsule	40 and 65 mm
Available length for the specimens	600 mm
Outer diameter of compacted coated particles fuel	12, 24 and 36 mm
Irradiation temperature	1000 - 1600 °C
Neutron flux	max. 2.5×10^{14} n/cm^2·sec (<0.625 eV) max. 1.5×10^{14} n/cm^2·sec (>1 MeV)

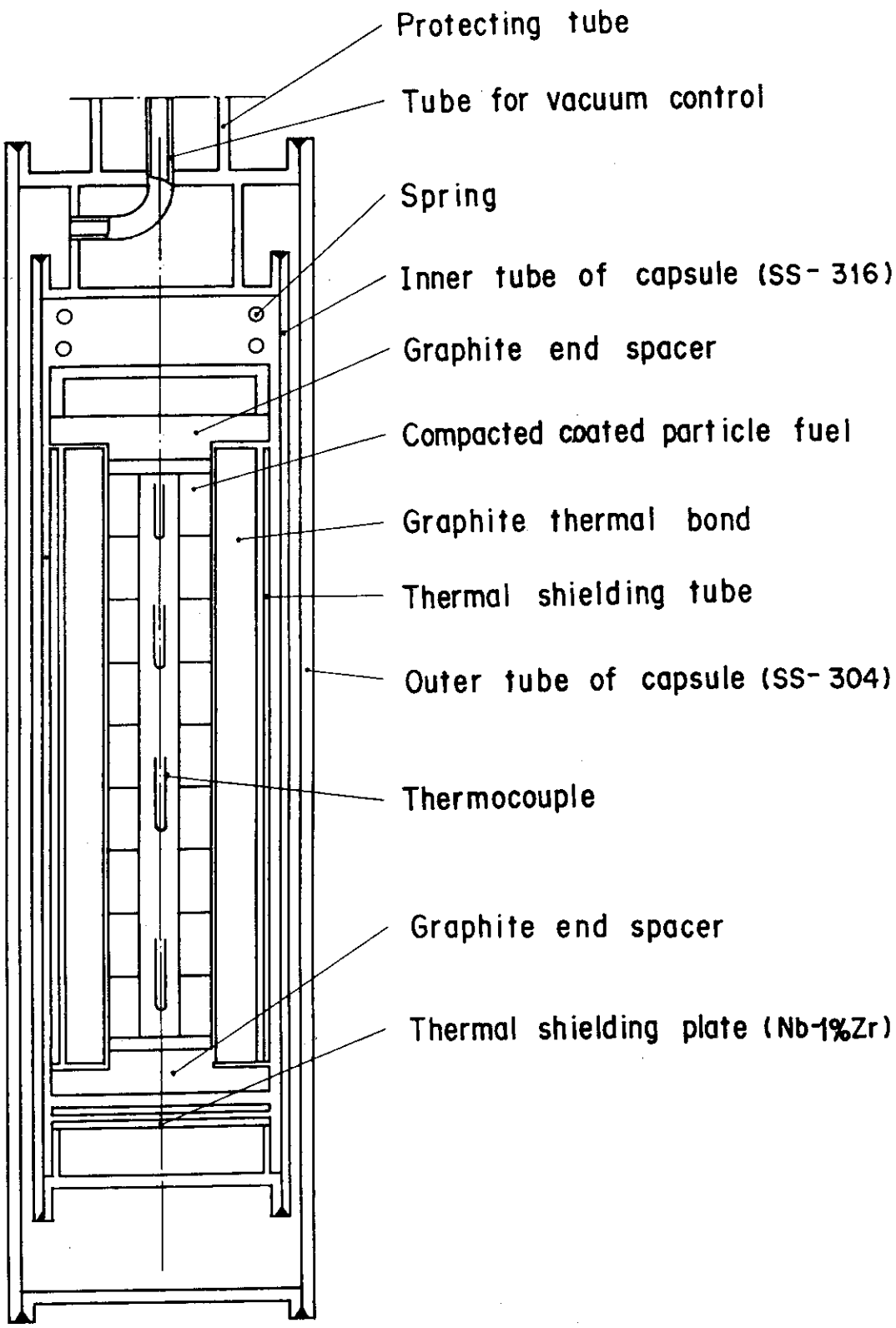

Fig. 3.7.1 Coated particle fuel irradiation capsule

(b) Gas sweep capsule (Figure 3.7.2)

Coated particle fuels for HTGR are irradiated to measure activities of gaseous fission products released from the fuels during irradiation.

The compacted coated particle fuels are placed in the double walled inner capsule of niobium-zirconium alloy (Nb-1 % Zr). The irradiation temperature of maximum 1600 °C is obtained by adjusting the temperature gradient across the gas gap between the double walls of the inner capsule by using the vacuum control method.

The purified helium gas sweeps the fuels and carries fission products released from the fuels to the gas analysing system. The gas sweep capsule holds three inner capsules and the each sweeping gas from each inner capsule is independently carried and analysed. Characteristics are shown in the table.

Characteristics

Item	Specification
Outer diameter of capsule	65 mm
Outer diameter of compacted coated particle fuels	24 mm
Available length for specimens in an inner capsule	80 mm
Irradiation temperature	1000 - 1600 °C
Number of inner capsules in a capsule	max. 3 capsules
Material of inner capsule	(a) Nb-1 % Zr [1)] (b) ss-316 [2)]
Neutron flux	max. 2.5×10^{14} n/cm^2·sec (<0.625 eV) max. 1.5×10^{14} n/cm^2·sec (>1 MeV)

1) Irradiation time is limited to be less than about 2000 hrs, and temperature at each inner capsule is adjustable independently.

2) There are no limitations for irradiation time, and temperature at an inner capsule of three ones can be controlled.

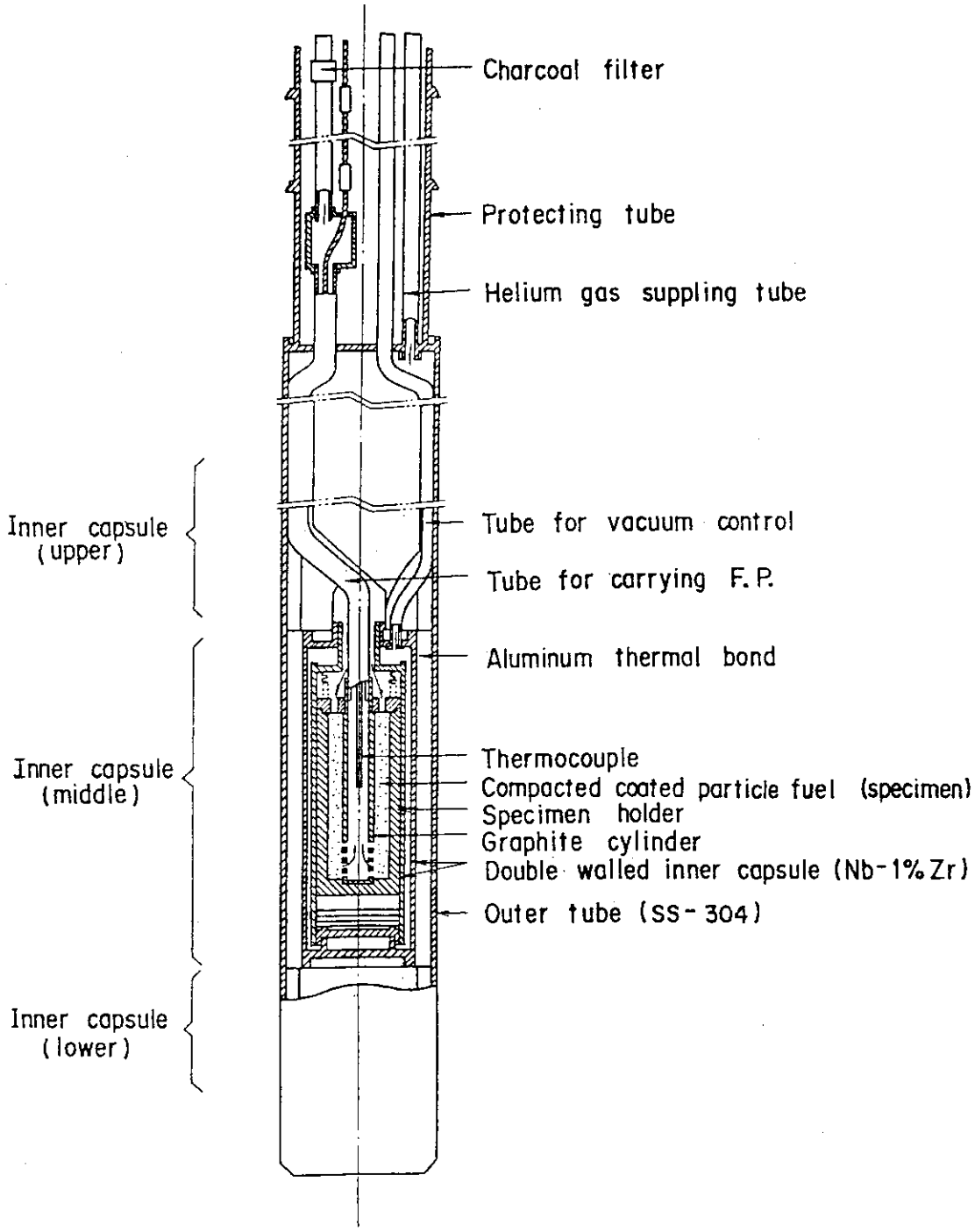

Fig. 3.7.2 Gas sweep capsule for coated particle fuel

(c) Temperature ramping capsule (Figure 3.7.3)

Coated particle fuels for HTGR are irradiated to investigate transient behaviors of the fuels at very high temperature (above 2000°C) by temperature ramping.

The compacted coated particle fuels are held in the graphite holder, which is placed in the inner capsule. The fixation of the graphite holder is made by being hanged on the upper plug of the inner capsule, by three tie-rods, the guide tube and the pressurized chamber. The holder is surrounded by the gaphite thermal bond which has the high thermal conductance during stationary irradiation condition of from 1000 to 1600°C.

The temperature ramping to above 2000°C is performed by changing the gas gap size between the graphite thermal bond and inner tube of capsule. The change of the gap size is made by displacing the thermal bond by means of pressurizing the bellows in the pressurized chamber. The displacement of the thermal bond is detected by means of the output of LVDT and the gas pressure of gas supplying system. The temperature of the specimens is monitored by the thermocouple placed in the center hole of the specimen. The inner capsule is enveloped by the outer capsule cooled by the reactor coolant and temperature regulation is made by adjusting the temperature gradient across the gas gap between the outer and inner capsule. Characteristics are shown in the table.

Characteristics

Item	Specification
Outer diameter of capsule	40 mm
Outer diameter of compacted coated particle fuels	12 mm
Irradiation temperature	1000 - 1600°C (before temperature-ramping) max. 2200°C (after temperature-ramping)
Temperature at bellows	max. 500°C
Neutron flux	max. 2.5×10^{14} n/cm^2·sec (<0.625 eV) max. 1.5×10^{14} n/cm^2·sec (>1 MeV)

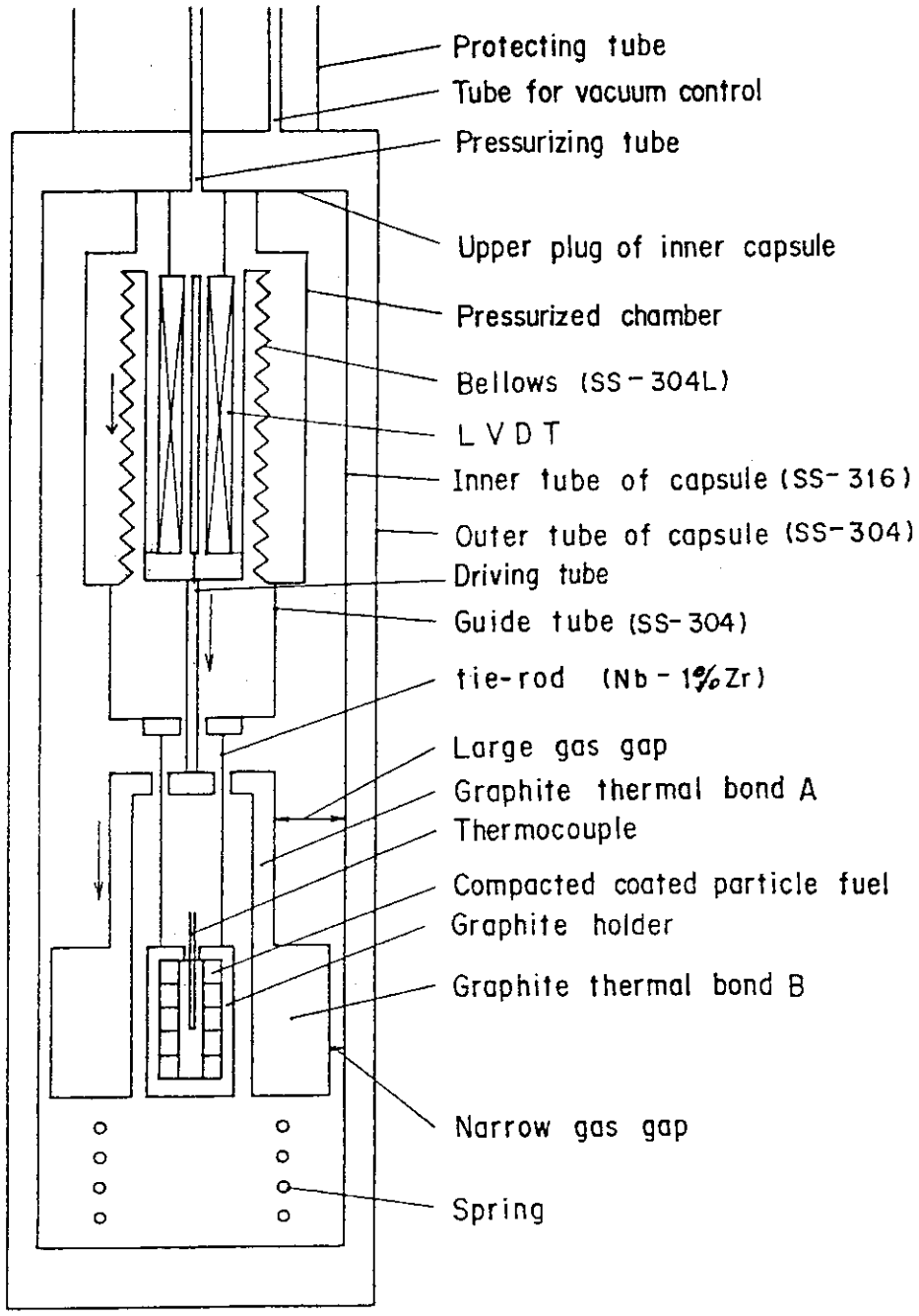

Fig. 3.7.3 Temperature ramping capsule

3.8 NaK bonded capsule

Some materials such as mixed-oxide fuel rods (fuel pellets of PuO_2-UO_2 with 316 stainless steel cladding) and tensile test specimens of 316 stainless steel are irradiated in NaK bonded capsule.

The mixed-oxide fuel rods are enveloped in the inner capsule with NaK which forms the thermal bond between the fuel rods and the inner capsule. The NaK has a good thermal conduction and a high boiling point, consequently the removal of the high heat rate is possible to perform the high power test for LMFBR fuel rod. The outer capsule envelopes the inner tube with co-extruded aluminum thermal bond. The outer capsule prepares the second shell for NaK to the reactor coolant. The temperature of the fuel cladding is regulated by varying the heat transfer through the gas gap between the outer capsule and the aluminum thermal bond with the inner capsule. Characteristics are shown in the table.

Characteristics

Item	Specification
Fuel rods	
Outer diameter of capsule	40 mm
Available fuel rod length	500 mm
Cladding temperature	500 - 750 °C
Power of fuel rod	max. 800 w/cm
Neutron flux	$(0.1\text{-}1)\times10^{14}$ n/cm^2·sec (<0.625 eV)
Non-fissile materials	
Outer diameter of capsule	40 mm
Available diameter for test pices	29 mm
Available length in capsule	600 mm
Nak temperature	max. 800 °C
Neutron flux	1×10^{14} n/cm^2·sec (>1 MeV)

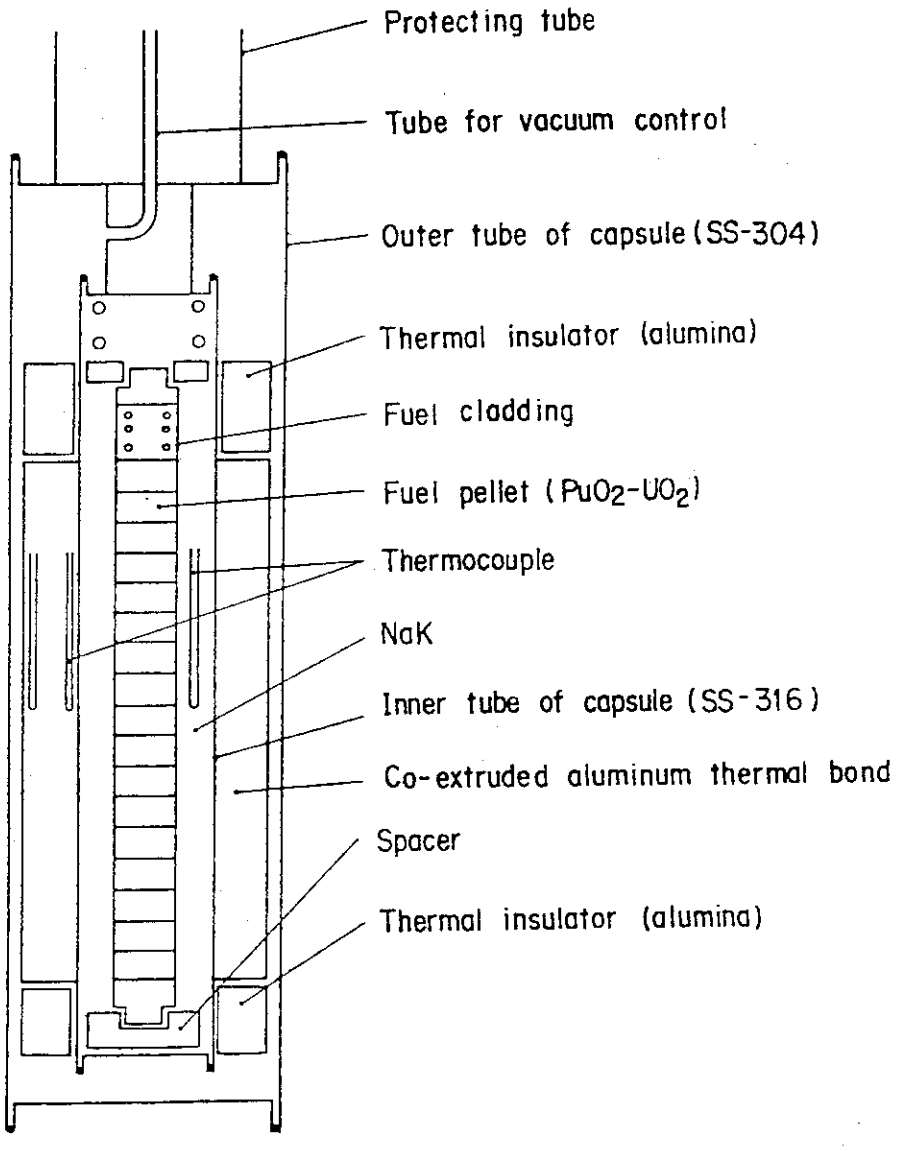

Fig. 3.8.1 Nak bonded capsule

3.9 Boiling water capsule

The BOCA (Boiling water capsule) has been recently developed for a irradiation test of fuels under the conditions of LWR.

A fuel pin to be tested is placed in a capsule filled with water. The water is pressurized by a out-pile pressurizer. The nuclear heat produced in the fuel pin is dissipated through the pressurized water and a capsule pressure tube, and is removed by the JMTR cooling water or the shrould cooling water. The surface temperature of the fuel pin is almost constant over a wide range of linear heat rate because of a subcool boiling at the surface.

The fresh demineralized water is continuously supplied to the capsule at very small flow rate for maintaining the water quality. The draining water from the capsule is monitored for fission products to detect fuel pin failure. Some equipments of the out-pile control circuit for the capsule is shielded with leads and is installed in a glove box for radioactive materials treatment. An automatic reactor power reduction system acts in case of pressure decrease in the capsule.

Some self-powered neutron detectors and/or micro-fission chambers and a LVDT type fuel pin elongation detector are equipped in the capsule for fuel pin power estimation and elongation behavior measurement.

A specially designed boiling water capsule is able to accept a pre-irradiated fuel pin. The fuel pin is loaded into the capsule in the hot laboratory.

The capsule is usually inserted into a gas screen of He-3 power control facility for power ramp and/or power cycling test.
(See section 5.2)

Characteristics of the boiling water capsule

Max. fuel rod power	590 W/cm
Usual fuel rod enrichment	2.8% for BWR size fuel 4.5% for PWR size fuel
Fuel rod diameter	9 to 12.5 mm
Max. active fuel rod length	400 mm
Coolant pressure	73 Kg/cm^2G
Cladding temperature	approximately 295°C
Rinsing rate of capsule water	1 CC/s.

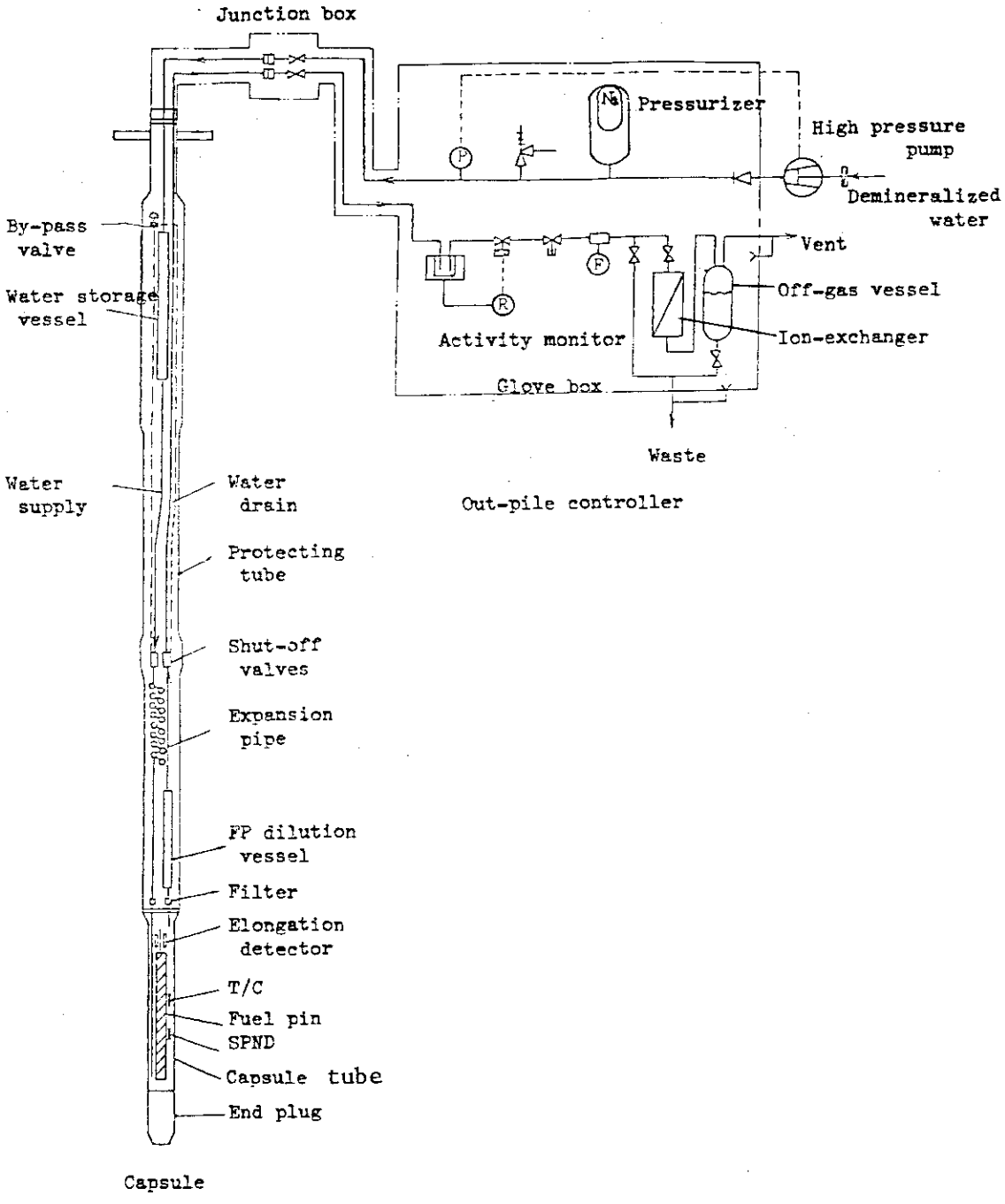

Fig. 3.9.1 Boiling Water Capsule and its Controller

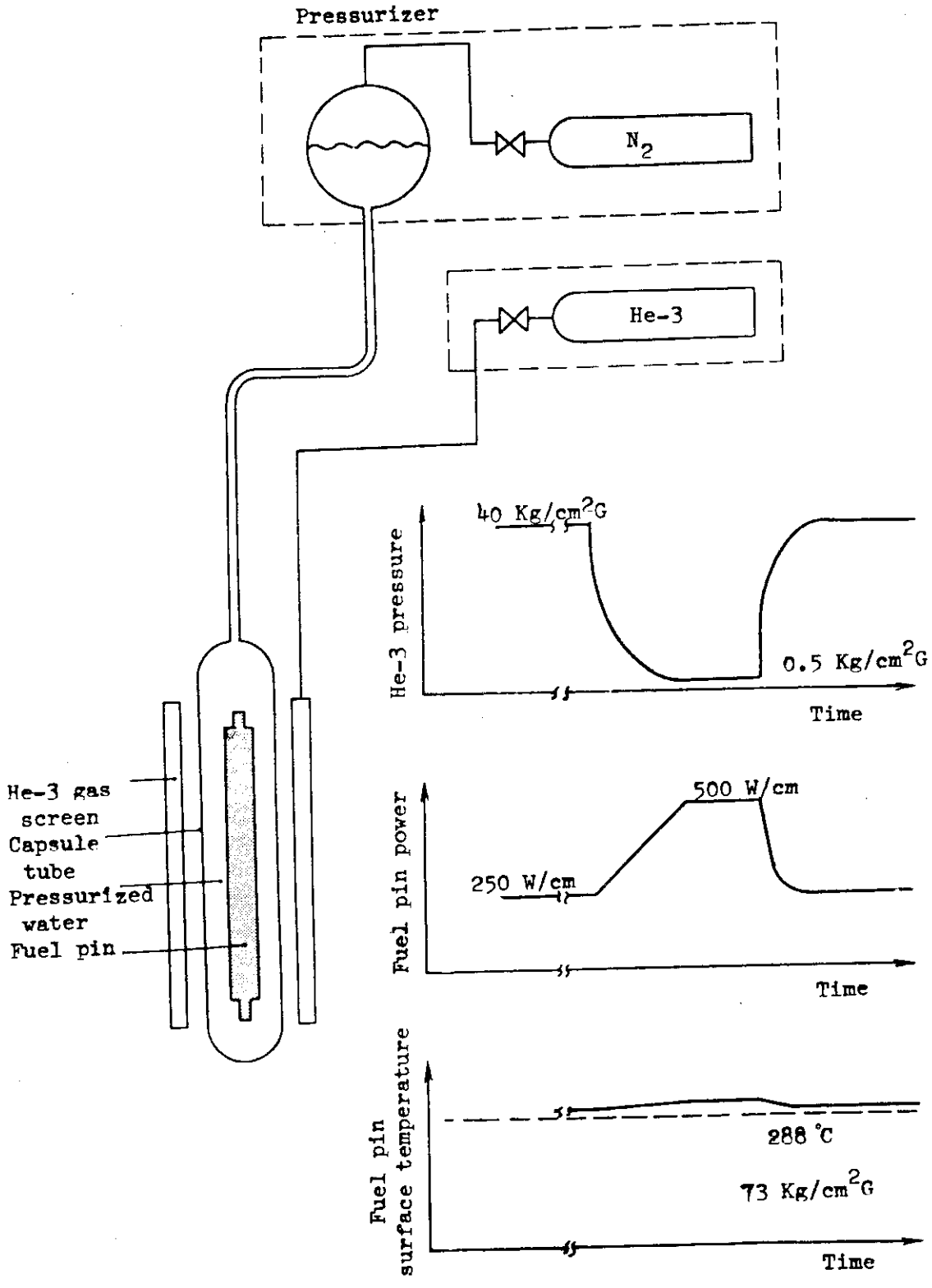

Fig. 3.9.2 Power Ramp Test using Boiling Water Capsule and He-3 Power Control Facility

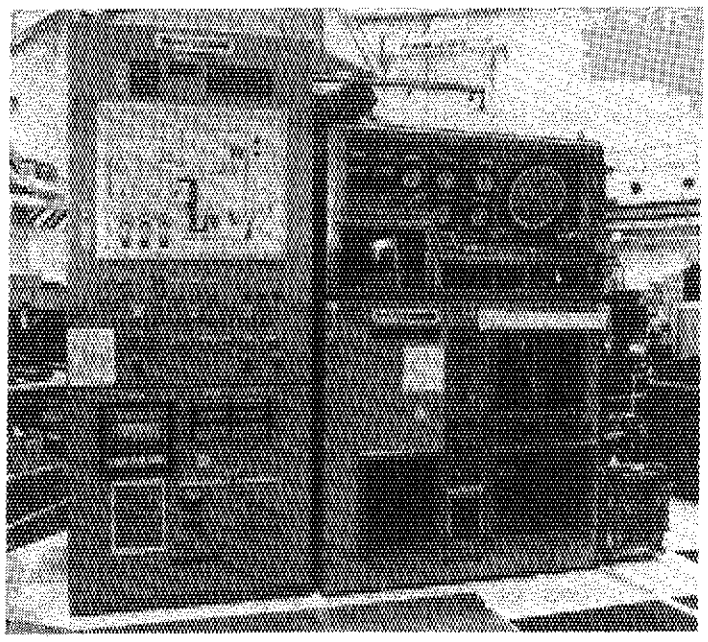

Fig. 3.9.3 Controllers for Boiling Water Capsule

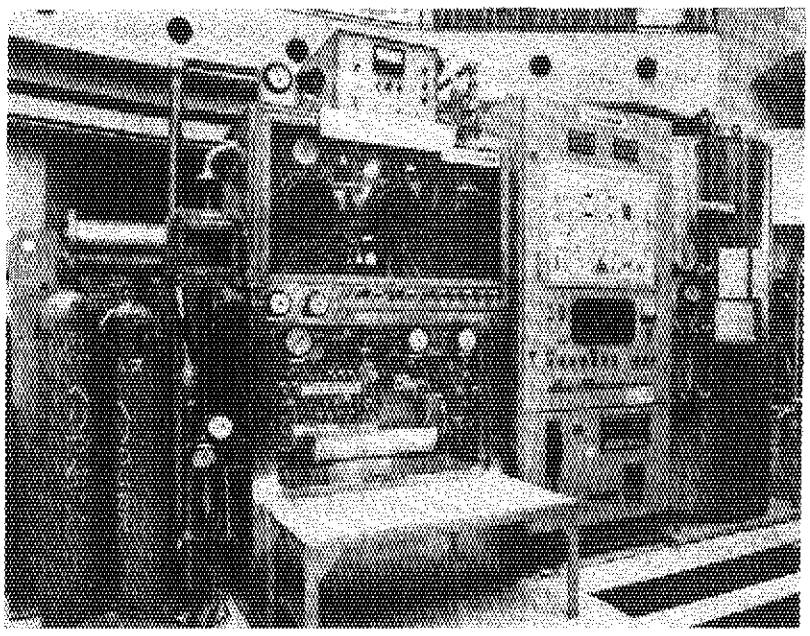

Fig. 3.9.4 He-3 Power Control Facility

4. Hydraulic rabbit facilities

Two hydraulic rabbit facilities have been installed in the JMTR; HR-1 and HR-2.

The facilities are hydraulic transfer devices for small capsule, rabbit. The rabbit containing test specimens is of 32 mm in outer-diameter and 150 mm in length. As the specimens can be easily inserted and remove during reactor operation, it is convenient for the short term irradiation of radioisotope production and basic research.

The in-pile tube of the facility enter into the reactor core through the nozzle provided in the top head of the reactor vessel. Their in-core parts are double concentric and housed with an aluminum block having the same outer shape as the fuel elements. Both in-pile tubes of the facilities are in the reflector region and can be charged with up to 3 rabbits.

The rabbit station is located by the side of the canal. The rabbit is sent to the ractor core and irradiated, then sent back to the canal or put into a transfer cask at the station.

The facility is of closed water circuit. The flow of demineralized water assure simultaneously the cooling of the rabbits and the injection and return (by flow inversion) of the rabbits. Two pipes connect the terminal station with in-pile tube; one for convey the rabbits and the other for circulating the water.

Characteristics of the hydraulic rabbit facilities

	HR-1	HR-2
Core position	D-5	M-11
Thermal neutron flux	$1.1*10^{14}$n/cm^2·s	$1.3*10^{14}$n/cm^2·s
Fast neutron flux	$8.8*10^{12}$n/cm^2·s	$2.1*10^{13}$n/cm^2·s
Gamma heating	1.1 W/g	2.2 W/g
Coolant flow rate	11 m^3/h	8.4 m^3/h
Coolant temperature	40°C	40°C
Max. heat generation per rabbit	20 KW	9 KW

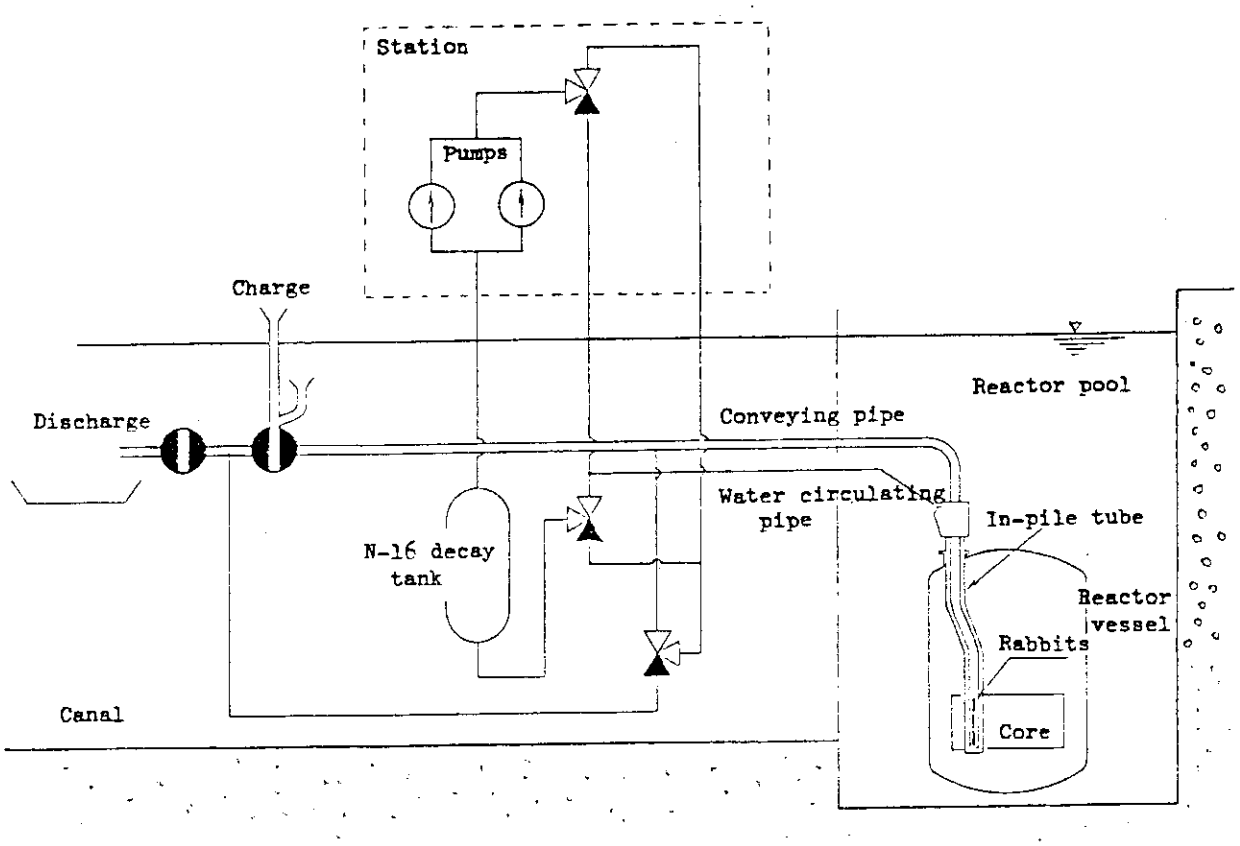

Fig. 4.1 Simplified Flow Sheet of the HR-2

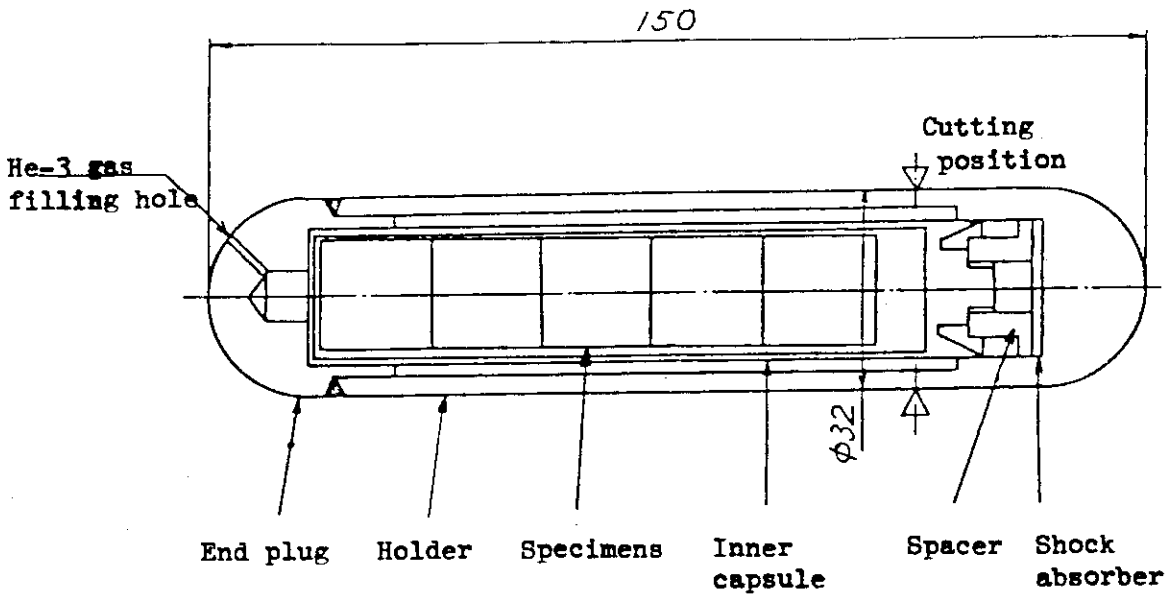

Fig. 4.2 Longitudinal Cross Section of a Rabbit

5. Special facilities

5.1 Neutron control facility (NCF)

The facility has a capability of moving a instrumented capsule in the in-pile tube in order to adjust nuclear heating or temperature of the specimens in the capsule.

The position of the capsule is changed by the driving mechanism installed on the top of the in-pile tube. The in-pile tube enters into the reactor core through the nozzle provided in the top head of the reactor vessel.

The max. length of the capsule is limited to 270 mm for 32 mm in diameter for smooth traveling in the curved tube. The capsule is connected to the driving mechanism with a flexible tube, which also serves as a protecting tube for instrument leads.

The capsule is cooled by a individual closed circulating water and is charged into or discharged from the in-pile tube during reactor shut down.

The position of the capsule is adjusted manually or automatically to control nuclear heating or temperature in the specimen. Control parameter such as position or temperature is changable sequentially using computer.

Characteristics of the neutron control facility

Core position	M-7
Thermal neutron flux	$0.3 - 2.4*10^{14} n/cm^2 \cdot s \cdot$ (variable)
Fast neutron flux	$0.1 - 7.7*10^{13} n/cm^2 \cdot s \cdot$ (variable)
Gamma heating	3.5 W/g (max.)
Coolant flow rate	4 m^3/h
Coolant temperature	40°C
Capsule dimension	32 mm O.D.×270 mm L
Driving speed	1 cm/s - 0.5 cm/h
Driving stroke	500 mm (max.)

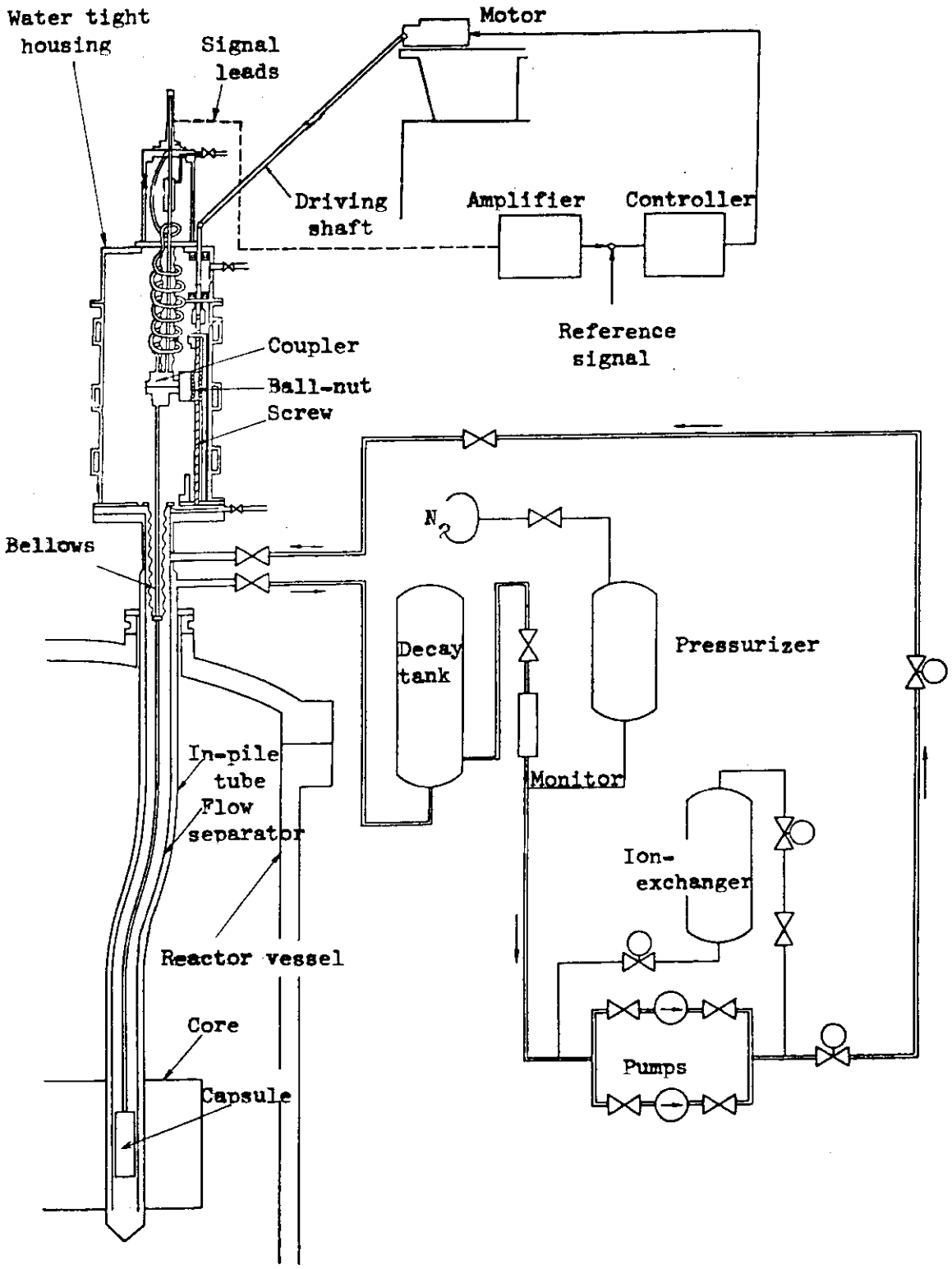

Fig. 5.1.1 Scheme of the Neutron Control Facility

5.2 He-3 power control facility

The He-3 power control facility, recently developed for power ramp test of LWR fuels, consists of a in-pile gas screen and a out-pile pressure controller. The He-3 gas screen has an annular gap between two concentric tubes filled with He-3 gas which possesses an important absorption cross section for thermal neutrons. By varying the He-3 gas pressure, the neutron flux in the capsule loaded into the central hole of the screen can be changed. A small gas flow is maintained through the annular gap for purifying the He-3 gas from Tritium produced by neutron capture.

The gas pressure is varied by means of a pressurizer equipped with a super flexible metal bellows. The He-3 gas screen is connected to the one-side of the bellows, and Nitrogen pressurizing gas is supplied to the other side. The He-3 gas pressure in the screen can be varied by charging or discharging Nitrogen gas into/from the pressurizer. The small thermal-expansion type gas pump is used for a circulation of He-3 gas through the gas screen and the Tritium trap. The Tritium trap is a column of Titanium grain heated to a operating temperature of 400°C. Max. Tritium production rate in the gas screen is estimated to be 60 Ci a day.

Characteristics of the He-3 power control facility

Range of He-3 pressure variation ..... 0.5-40 Kg/cm^2G
Range of neutron flux depression factor 2.4
Required time for pressure variation;
40 to 0.5 Kg/cm^2G ..... 1 min.-100 h.
0.5 to 40 Kg/cm^2G ..... 10 min.-1 h.
Rate of power ramp ..... 1 % of max. power/s. (max)
1 % of max. power/h. (min)
Flow rate of He-3 gas ..... 1 cc/s.

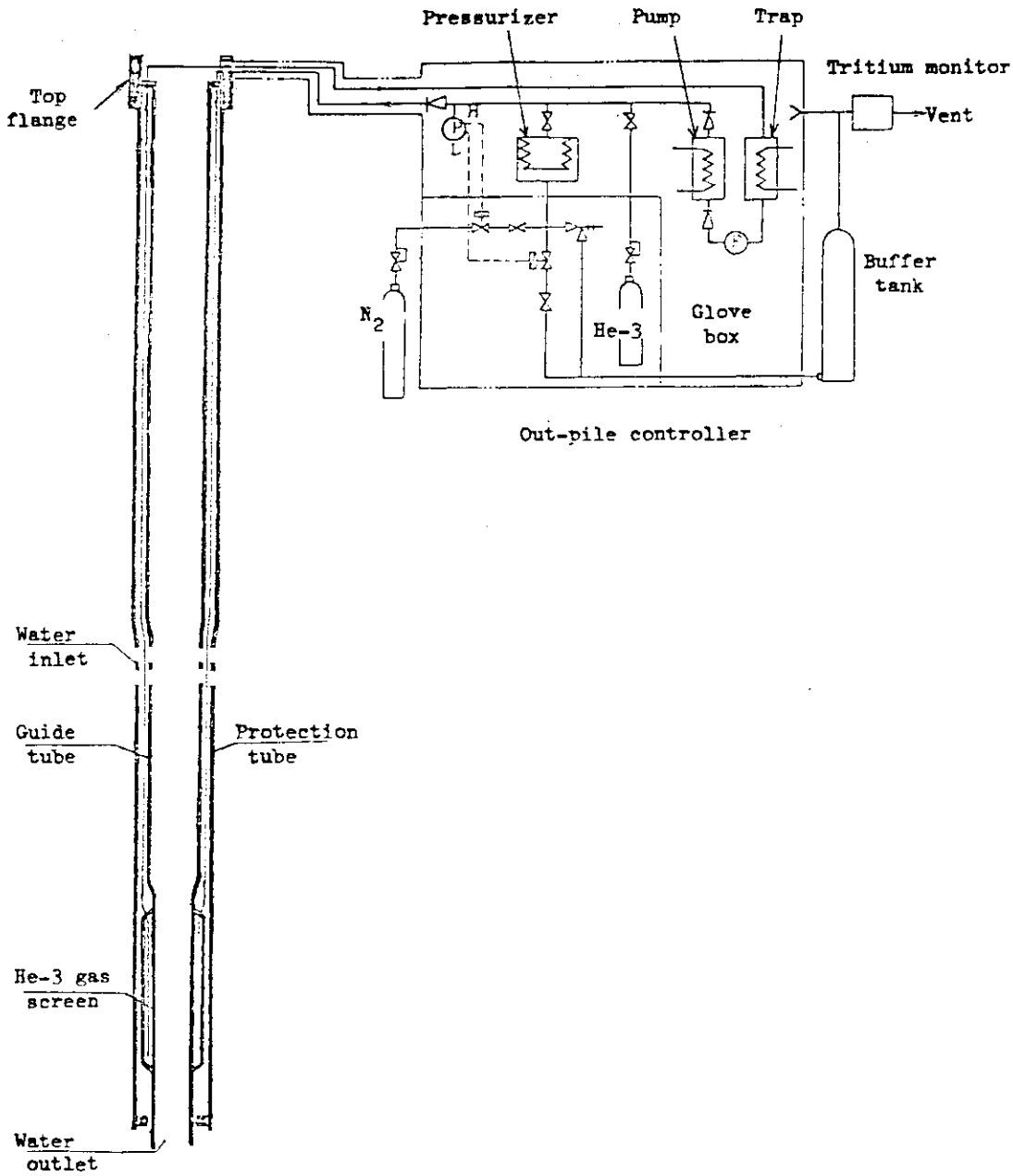

Fig. 5.2.1 He-3 Power Control Facility

5.3 Shrould facility (OSF-1)

The facility has a straight in-pile tube open to the reactor pool and a individual cooling water system. A heavily instrumented or complicated capsule such as a boiling water capsule can be charged into or discharged from the in-pile tube even during reactor operation. Charging or discharging is carried out with remotely operated capsule exchanger.

Flow separator of the in-pile tube has a He-3 gas screen on its core region. Power ramp tests are to be carried out for fuel pins contained in boiling water capsules combining with a pressure controller of the He-3 power control facility.

The facility will be completed in 1983.

Characteristics of the shrould facility

Core position	D-9
Thermal neutron flux	$2.6*10^{14}$ $n/cm^2 \cdot s$ (max.)
Fast neutron flux	$2.2*10^{13}$ $n/cm^2 \cdot s$.
Gamma heating	2.2 W/g
Coolant flow rate	2 m^3/h
Coolant temperature	40°C
Max. heat generation in a capsule	30 KW
He-3 gas screen dimension	34 mm I.D.×540 mm L

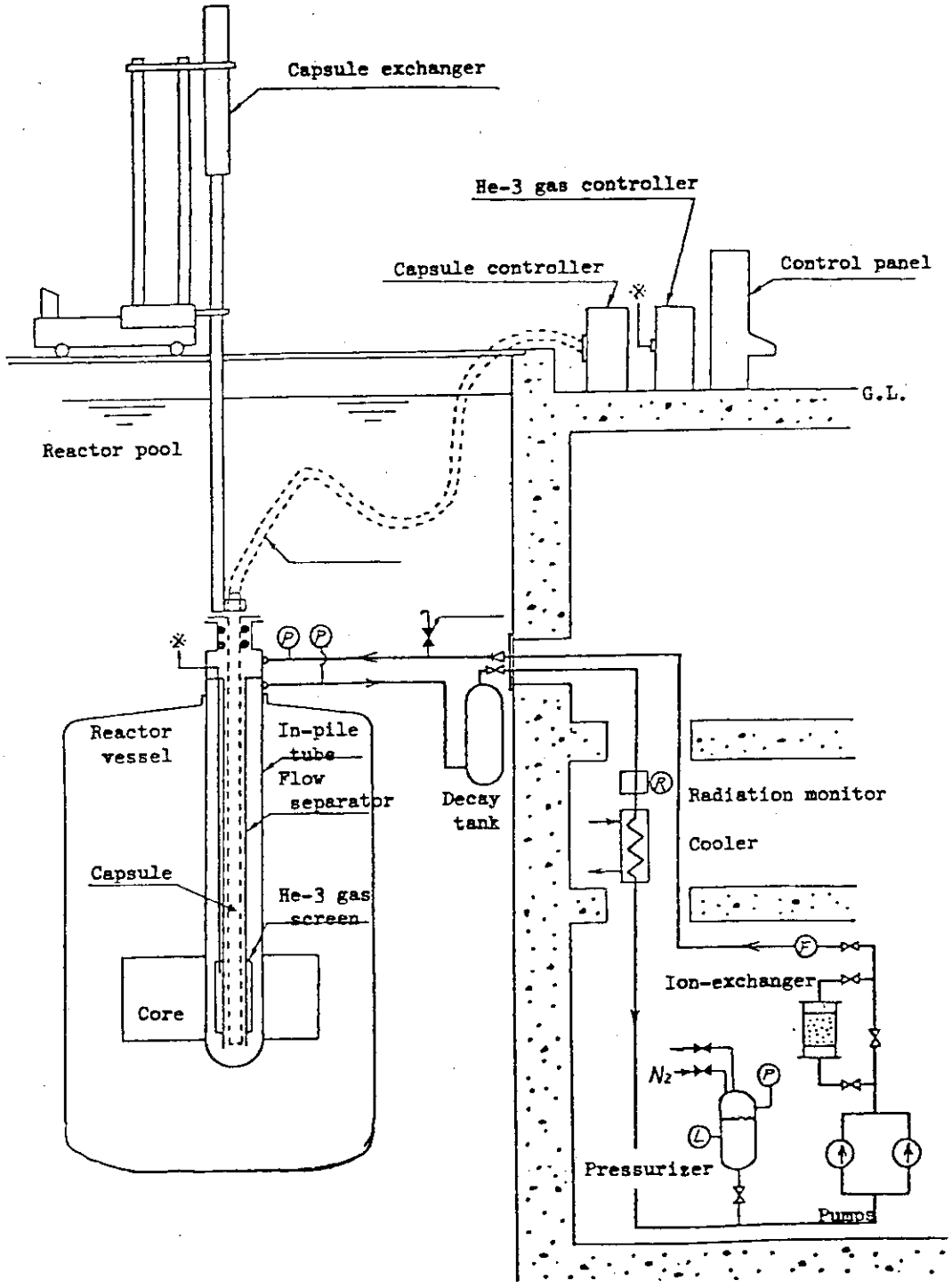

Fig. 5.3.1 Scheme of the Shrould Facility

6. Loops

6.1 OWL-1

OWL-1 (Oarai Water Loop No.1) was installed as experimental facility for following items in JMTR on 1970.

(1) Irradiation experiment for several kind fuel elements and materials used in BWR, PWR and ATR,

(2) Compatibility of materials and compatibility of fuel element, corrosion test in coolant,

(3) Thermal and hydraulic performance test for fuel assembly,

(4) Several kinds of experiments for failed fuel.

OWL-1 is consisted with primary cooling system, secondary cooling system, auxiliary system, safety system and control system. An outline flow sheet of OWL-1 is shown on Fig. 6.1.1.

The in-pile tube is constructed of coaxial straight tube, the tube has been mounted on the top of reactor pressure vessel of JMTR, and has been inserted in core position D-7 as shown on Fig.6.1.3. Coolant flow is formed in re-entrant type. Experimental irradiation specimen is inserted from the top closure to the in-core test section.

The in-pile tube was renewed because of radiation damage on August, 1973.

According to the experiment purpose, an inside atmosphere of test section as like as PWR or BWR condition is performed. High temperature and high pressure operation of the loop is usually continued for approximately one month with matching to reactor operation period.

Out-pile equipments of the facility has been installed in the loop cubicle (room) that was consisted with thick biological shielding concrete.

OWL-1 has three out-pile test sections in the primary cooling system. The No.1 test section has been installed in the inlet of the in-pile tube, the No.2 test section has been installed in the outlet of the in-pile tube, and the No.3 test section has been installed in the steam line. These test sections are located in the loop cubicle, and are usually used for a corrosion test.

Table 6.1.1 summarizes the pertinent OWL-1 design and operating parameters.

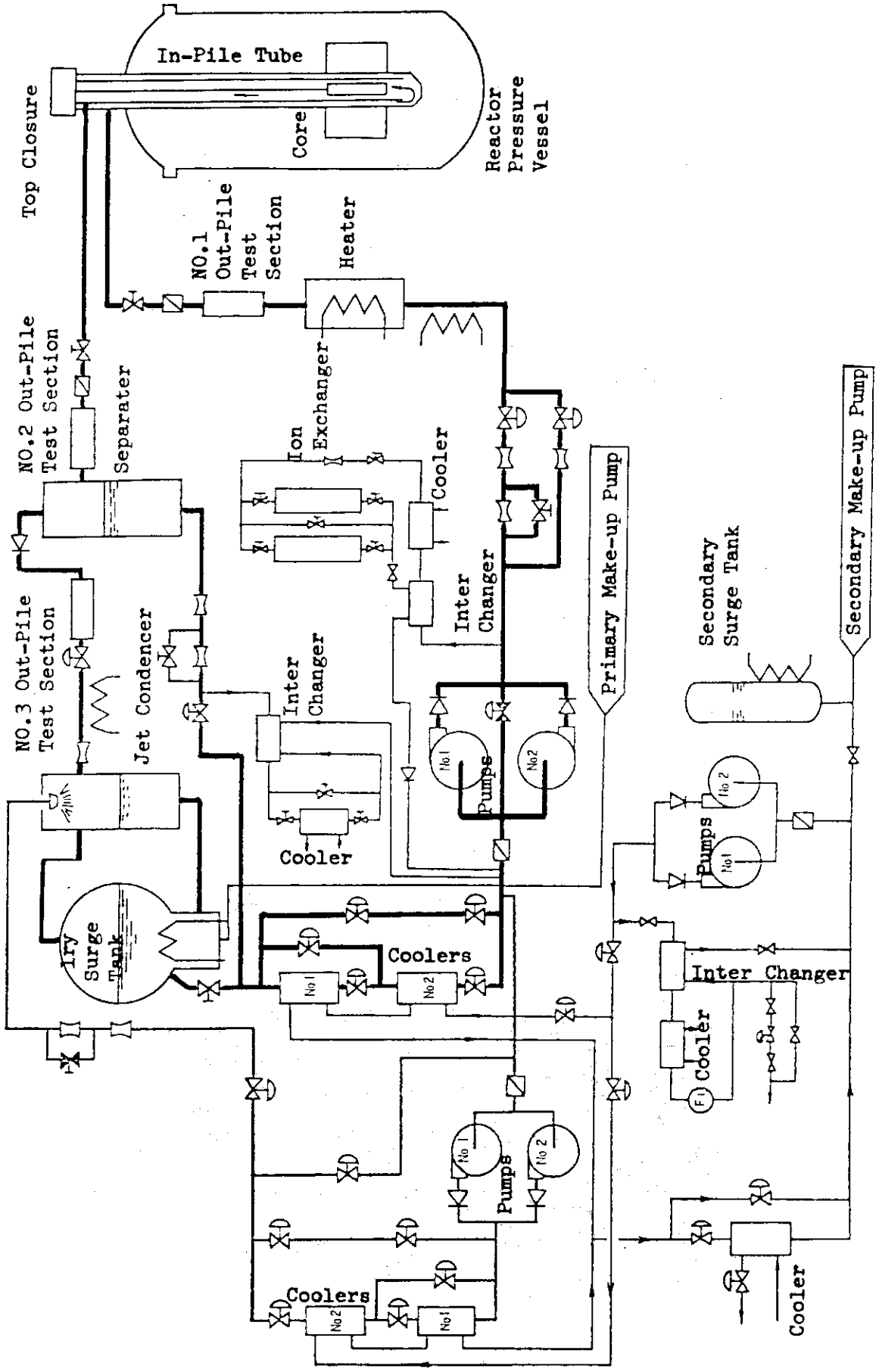

Fig. 6.1.1 Flow Diagram of OWL-1

Table 6.1.1

OWL-1 LOOP

Loop Type	Pressurized water
	Re-entrant Type
Core position	D-7
Thermal Flux	1.4×10^{14} n.cm^{-2}.s^{-1} (max.)
Fast Flux	2.9×10^{13} n.cm^{-2}.s^{-1} (max.)
Heat Generation of Specimen	200 KW (max)
Test Section (in-pile tube)	
Material	Stainless Steel
Effective Length	750 mm
Diameter	39.7 mm
Coolant	Water
Operating Condition	
Pressure	150 Kg/cm^2.G in P-mode Operation
	115 Kg/cm^2.G in B-mode Operation
Flow	250 Kg/min.
Temperature	320°C
Steam Quality in B-mode Operation	20 % (max)

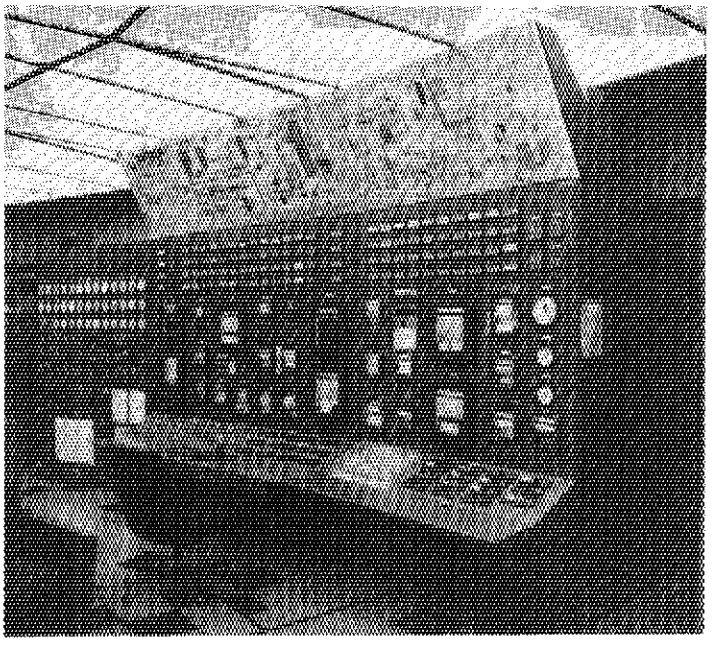

Fig. 6.1.2 Control Desk for OWL-1

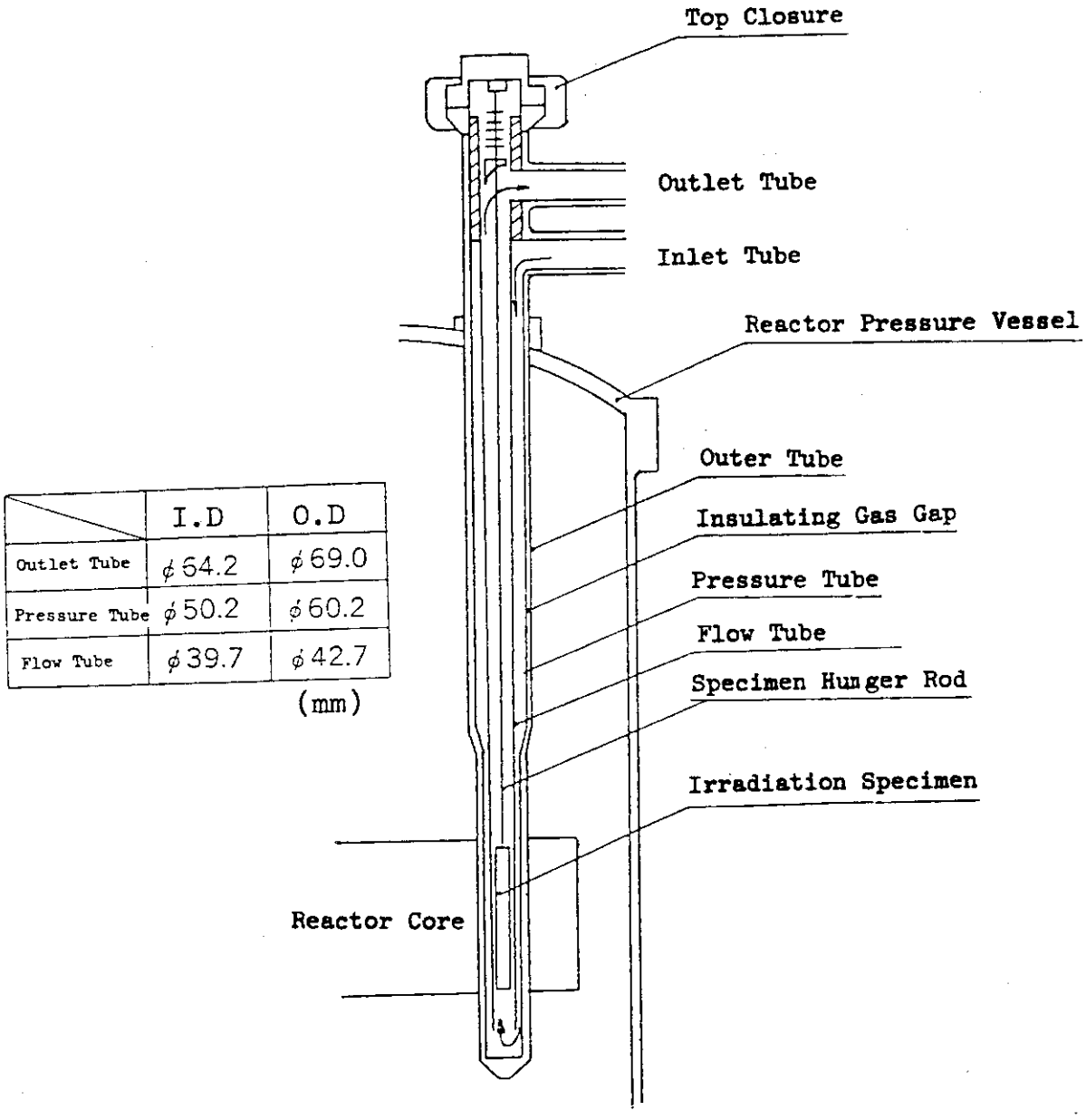

	I.D	O.D
Outlet Tube	ϕ54.2	ϕ69.0
Pressure Tube	ϕ50.2	ϕ60.2
Flow Tube	ϕ39.7	ϕ42.7

(mm)

Fig. 6.1.3 OWL-1 In-Pile Tube

6.2 OWL-2

OWL-2 (Oarai Water Loop No.2) was installed in JMTR on 1971, this facility is mainly used for the irradiation experiments of fuel element and component materials for a light water cooled reactor.

OWL-2 is consisted with primary cooling system, secondary cooling system, safety and control system. Both primary and secondary cooling system are closed-circulating system, and heat exchanger for heat transfer is placed between the primary cooling system and secondary cooling system. Secondary coolant is cooled by the water of utility cooling line (UCL) through the heat exchanger.

In-pile test section (tube) is the straight tube passing through the reactor core from the top of reactor pressure vessel to the bottom as shown in Fig. 6.2.3. The stream of primary coolant is up-flow type, and the irradiation test specimen is inserted from the top closure to the core position. An outline flow sheet of OWL-2 is shown on Fig. 6.2.1.

According to the experimental purpose, an inside atmosphere of test section is formed by out-pile equipments (electric heater and high pressure injection pump, etc.). High temperature and high pressure operation of this loop is also same as the OWL-1.

Out-pile equipments of this facility has been installed in the loop cubicle (room) that was consisted with thick biological shielding concrete.

OWL-2 has three out-pile test sections in the primary cooling system. The No.1 test section hss been installed in the inlet of the in-pile tube the No.2 test section has been installed in the outlet of in-pile tube, and the No.3 test section has been installed in the steam line. These test sections are located in the loop cubicle, and are usually used for a corrosion test.

Table 6.2.1 summarizes the pertinent OWL-2 design and operating parameters.

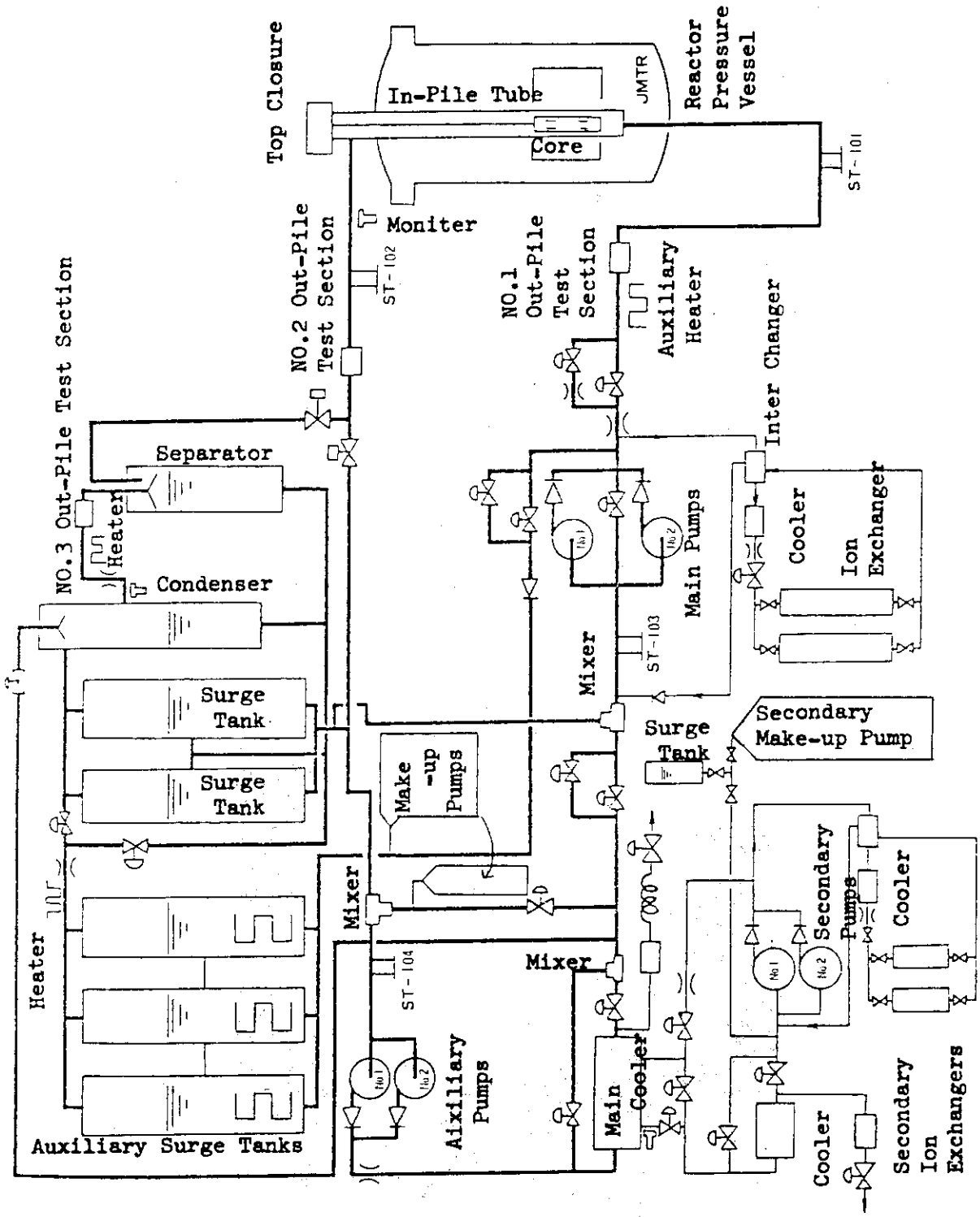

Fig. 6.2.1 Flow Diagram of OWL-2

Table 6.2.1

OWL-2 LOOP

Loop Type	Pressurized Water Through Type
Core position	K,L-3,4
Thermal Flux	5.4×10^{13} $n.cm^{-2}.s^{-1}$ (max)
Fast Flux	5.5×10^{13} $n.cm^{-2}.s^{-1}$ (max)
Heat Generation of Specimen	850 KW (max)
Test Section (in-pile tube)	
Material	Stainless Steel
Effective Length	750 mm
Diameter	117.8 mm
Coolant	Water
Operating Condition	
Pressure	73 $Kg/cm^2.G$
Flow	1,100 Kg/min.
Temperature	270°C in P-mode Operation 285°C in B-mode Operation
Steam Quality in B-mode Operation	20 % (max)

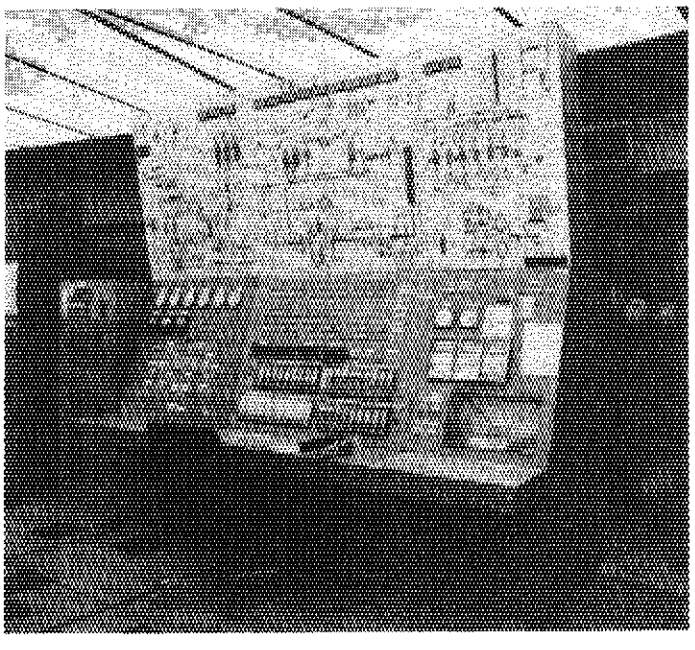

Fig. 6.2.2 Control Desk for OWL-2

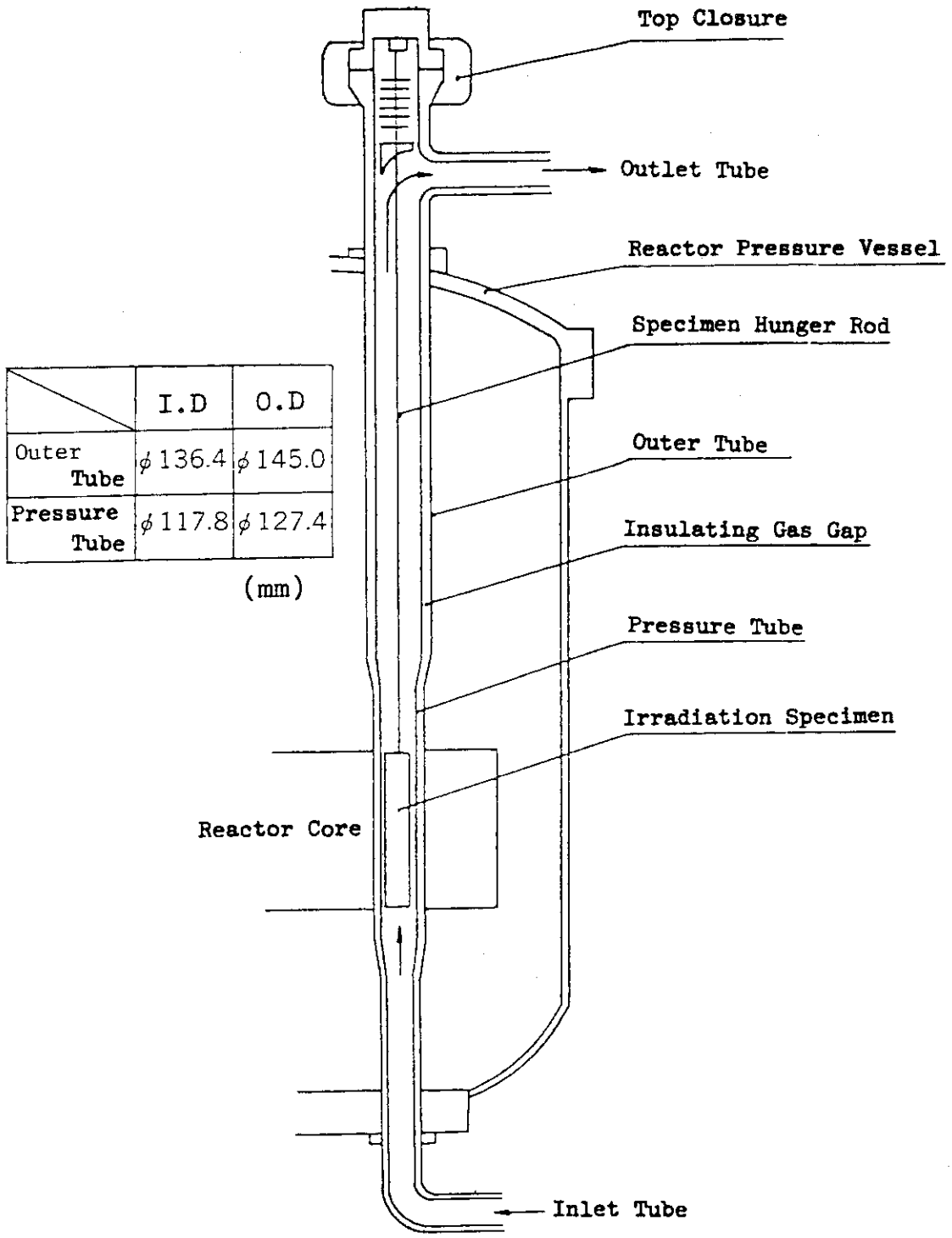

	I.D	O.D
Outer Tube	ϕ136.4	ϕ145.0
Pressure Tube	ϕ117.8	ϕ127.4

(mm)

Fig. 6.2.3 OWL-2 In-Pile Tube

6.3 OGL-1

OGL-1 (Oarai Gas Loop No.1) is a high temperature in-pile gas loop which was developed as a testing facility for the multipurpose high temperature gas cooled reactor (VHTR), especially designed to make irradiation test of coated particle fuel and graphite under the helium flow condition of 1,000°C. This loop is not only an irradiation facility but also a pilot plant of VHTR, and was installed in JMTR on 1977.

The OGL-1 facility consists of an in-pile tube, primary circulating system, secondary circulating system, purification system and auxiliary system. Fig. 6.3.3 shows the OGL-1 in-pile tube. The in-pile tube is of the re-entrant type, and consists of four coaxial tubes to keep He gas temperature sufficiently high.

Direct resistance heating of the primary piping is used for the heater. The helium purification system consists of a precharcoal trap, molecular sieve trap to remove moisture and carbon dioxide, a cold charcoal trap to remove the fission-produced noble gases, and a hydrogen removal section including titanium sponge as the getter. Secondary coolant is the air. An outline flow sheet of this loop is shown on Fig. 6.3.1.

An irradiation test specimen is inserted from the top closure to core position.

Out-pile equipments of this facility has been installed in the loop cubicle (room) that was consisted with thick biological shielding concrete.

Table 6.3.1 summarizes the pertinent OGL-1 design and operating parameters.

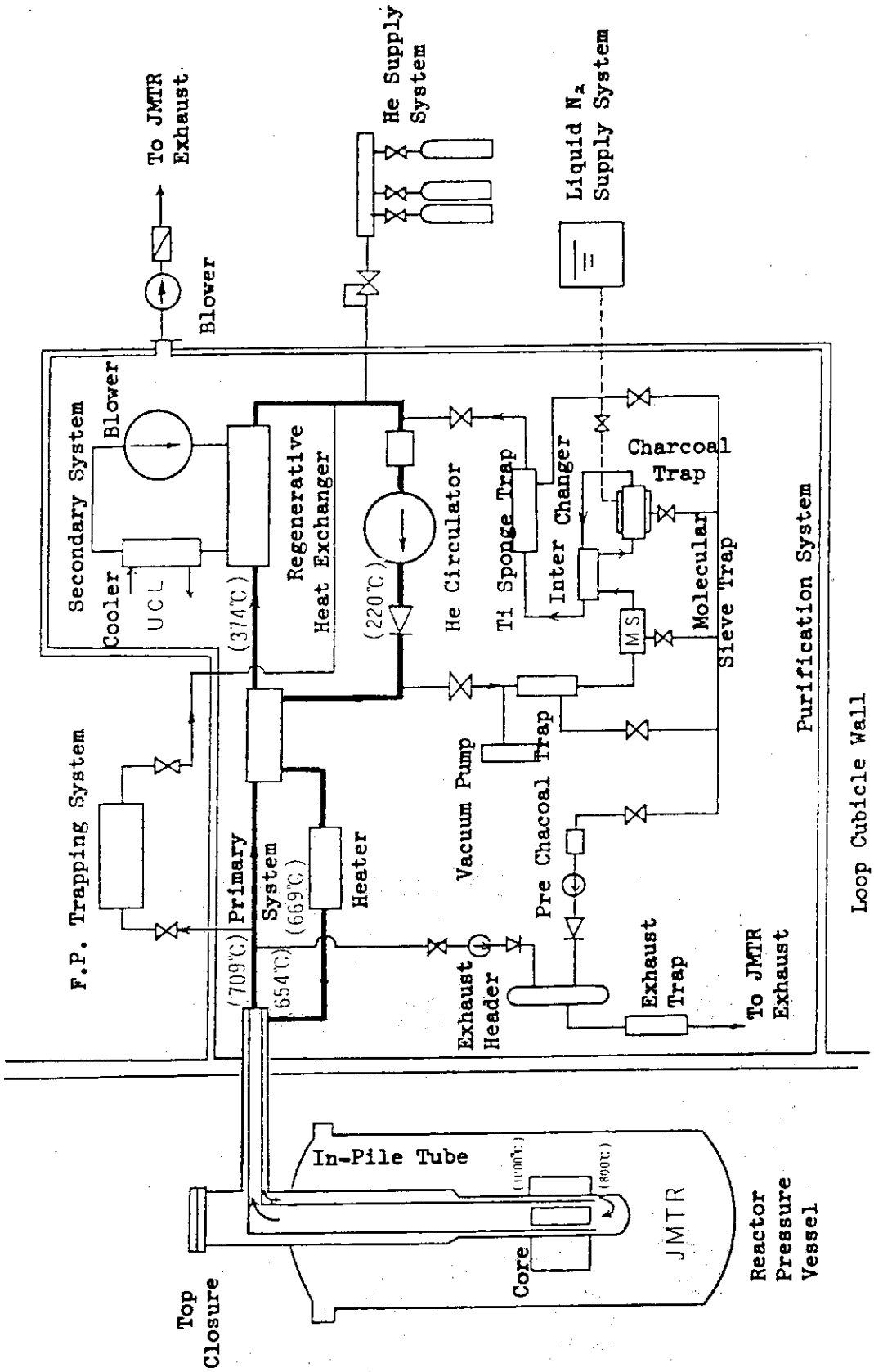

Fig. 6.3.1 Flow Diagram of OGL-1

Table 6.3.1

OGL-1 LOOP

Loop Type	Pressurized Gas Re-entrant Type
Core position	G,H-3,4
Thermal Flux	5.9×10^{13} $n\cdot cm^{-2}\cdot s^{-1}$ (max)
Fast Flux	1.3×10^{13} $n\cdot cm^{-2}\cdot s^{-1}$ (max)
Heat Generation of Specimen	135 KW (max)
Test Section (in-pile tube)	
Material	Hastelloy-X (Flow Tube and Inner Barrier Tube surrounded by high temperature Helium Gas)
Effective Length	750 mm
Diameter	82 mm
Coolant	Helium Gas
Operating Condition	
Pressure	30 $Kg/cm^2\cdot G$
Flow	6 Kg/min.
Temperature	1,000°C (at Test Section)
Impurity	less than 10 vpm
Out-pile Test Section	None

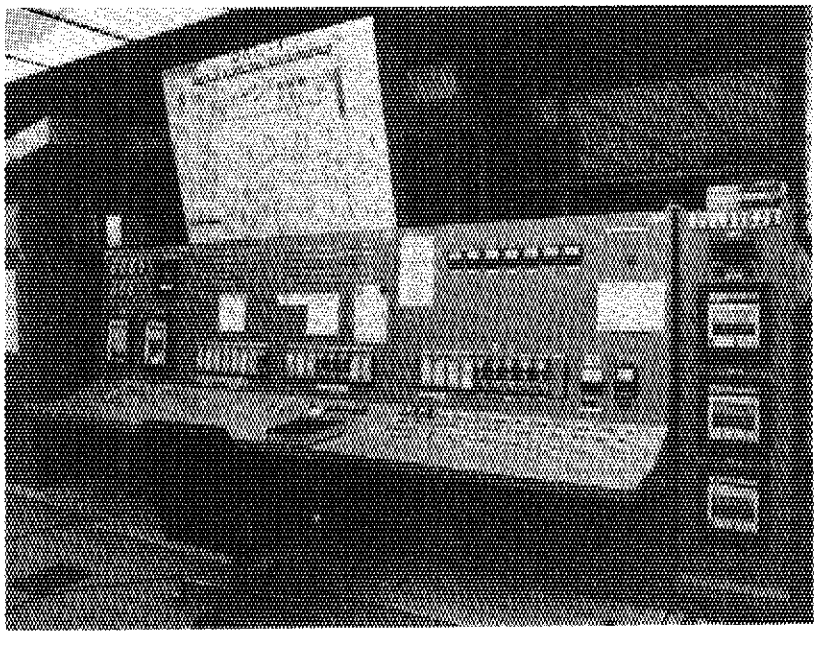

Fig. 6.3.2 Control Desk for OGL-1

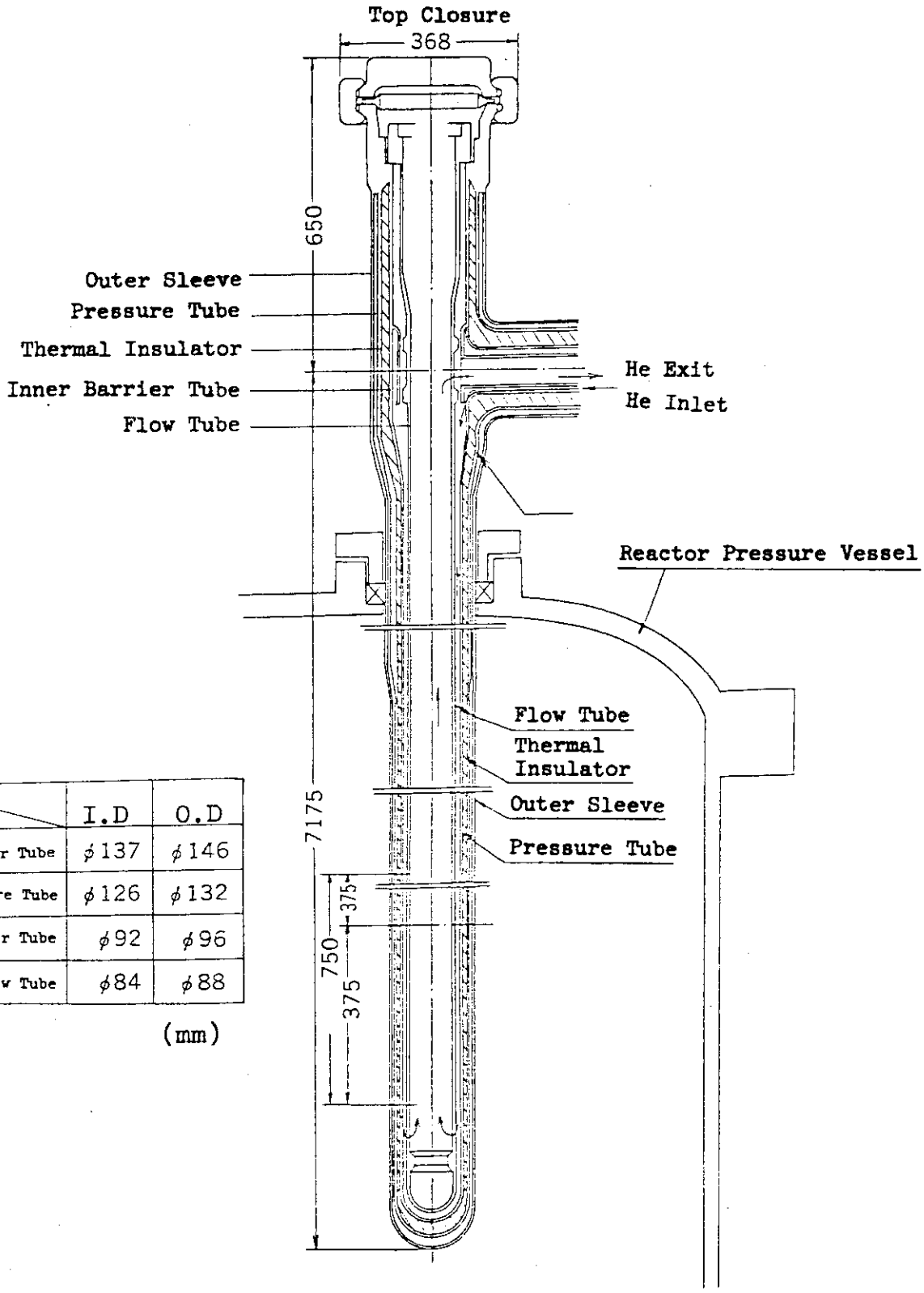

	I.D	O.D
Outer Tube	ϕ137	ϕ146
Pressure Tube	ϕ126	ϕ132
Inner Tube	ϕ92	ϕ96
Flow Tube	ϕ84	ϕ88

(mm)

Fig. 6.3.3 OGL-1 In-Pile Tube

7. In-core instruments and devices

7.1 Thermocouple

The Chromel-Alumel (CA) thermocouples are available to measure temperature of specimens in a capsule up to about 1100°C and tungsten-rhenium thermocouples are used for measuring temperature from about 1100 to about 2100°C, occasionally 2300°C. The Nb-1 % Zr sheathed high temperature thermocouples are mostly applied to measure the temperature of coated particle fuels specimens for HTGR up to about 1600°C, occasionally 1800°C. The molybdenum sheathed thermocouples are utilized for measuring center line temperature of fuel rods for LWR. High temperature thermocouples with hafnia insulation and sheath of W-augmented rhenium are being developed for measuring temperature above 2100°C. All thermocouples used in JMTR are un-grounded type (Figure 7.1.1). Specifications are shown in the table.

Specifications

Specification of thermocouples	Temperature range
Chromel-Alumel (CA) thermocouples, MgO insulation, ss-316 sheath, 0.5, 1.0 and 1.6mm O.D.	up to 1100°C
W-5 % Re/W-26 % Re thermocouples, BeO insulation, Nb-1 % Zr or Mo sheath, 1.6 or 1.8mm O.D.	from 1100 to 1800 °C
W-5 % Re/W-26 % Re thermocouples, BeO insulation with Ta barrier tube, W-22 % Re sheath, 2.0mm O.D.	from 1100 to 2100°C

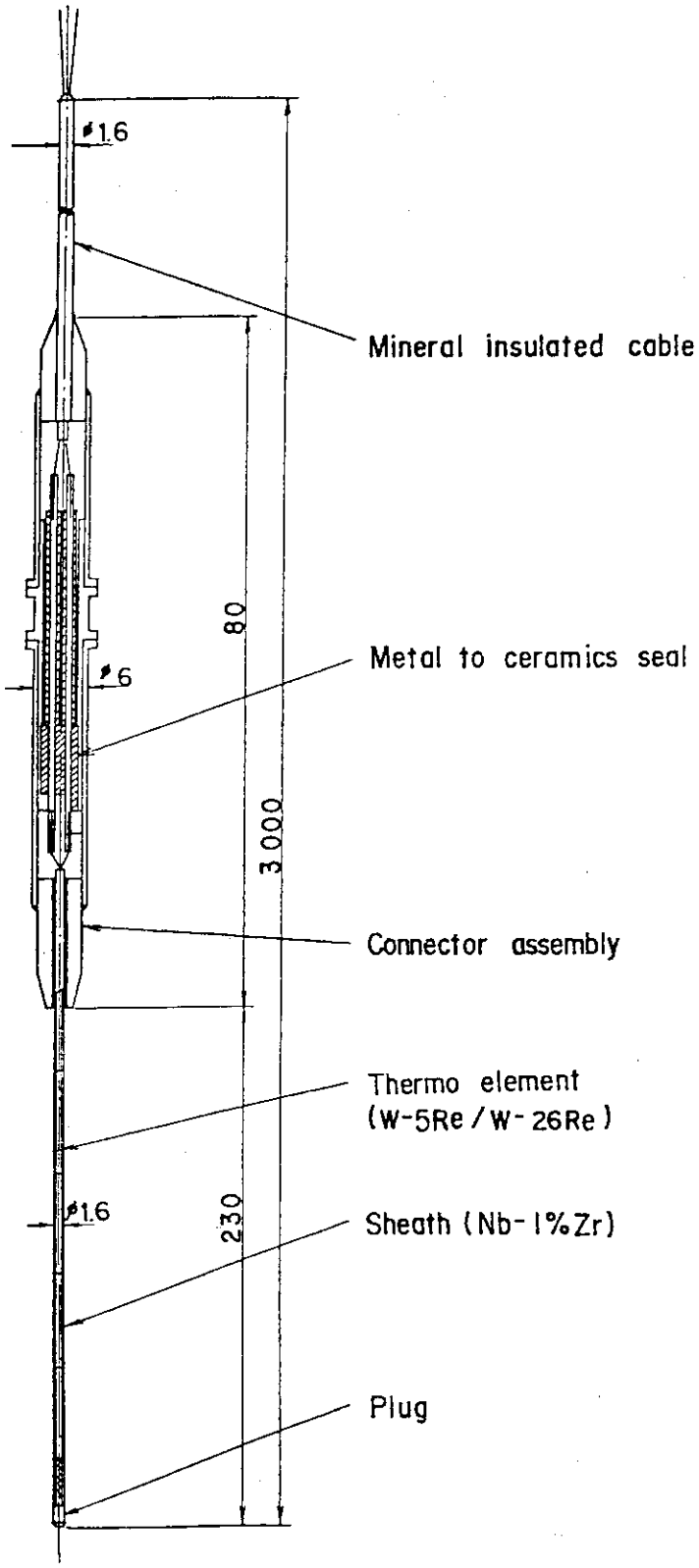

Fig. 7.1.1 High temperature thermocouple

7.2 Linear variable differential transformer (LVDT)

The linear variable differential transformer (LVDT) is available as an in-pile detector of displacement in the capsule. The combined elongation and failure detector with the LVDT shown in Fig. 7.2.1 is loaded in the boiling water capsule (BOCA) to measure elongation of fuel pin and also to detect failure of the pin when occured.

The LVDT is applied as an extensometer for various purposes in the capsule, for example, to measure the creep strain of the stressed specimen in the in-pile creep capsule. Another application of the LVDT is a detector for displacement of the actuating bellows for moving the thermal-bond in the temperature ramping capsule. Specifications are shown in the table.

Specifications

Item	Specification
a) Combined elongation and failure detector	
Linear range	± 3 mm
Sensitivity	0.01 mm
Service temperature	350°C for continuous usage, 460°C for short term usage
Minimum operating pressure of bellows	0.2 kg/cm^2
Exciting current	50 mA
Exciting frequency	400 Hz
b) Extensometer for temperature ramping capsule	
Measuring range	0 - 80 mm
Accuracy	± 3 mm for stroke of 80 mm
Service temperature	350°C
Exciting current	30 mA
Exciting frequency	500 Hz
c) Extensometer for in-pile creep capsule	
Measuring range	0 - 10 mm
Sensitivity	0.01 mm
Service temperature	350°C
Exciting current	50 mA
Exciting frequency	400 Hz

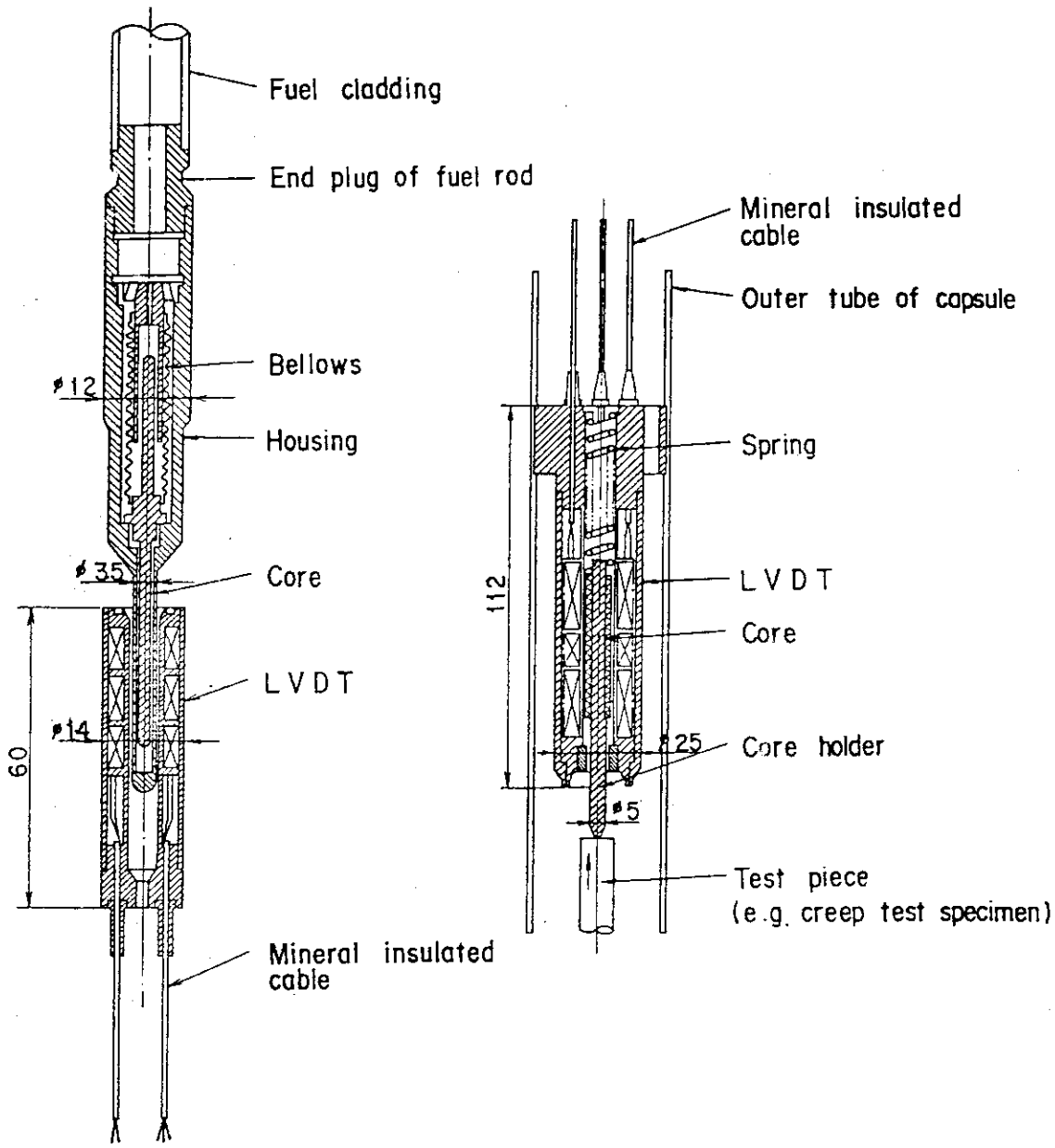

(a) Combined elongation and failure detector

(b) Extensometer for in-pile creep capsule

Fig. 7.2.1 Linear variable differential transformer (LVDT)

7.3 Pressure transducer

Two types of pressure transducer used for measuring fission gas pressure inside fuel pins and other gas pressure are available in JMTR.

(1) Null-balanced ON-OFF type (Fig. 7.3.1 (A))

A bellows of stainless-steel that withstands the pressure of 70 kg/cm^2 is placed in the center of the transducer as the element for detecting gas pressure. A moving electrical contact-point is fixed at the top of the bellows. An another electrical contact-point is fixed to the housing of transducer. The fixed contact-point is insulated with the transducer by alumina washer. Gas pressure is obtained as a balancing pressure between the inside and outside of bellows by measuring the back pressure from out-of-pile system. Specifications are shown in the table.

Specifications

Item	Specifications
Measuring range	0 - 70 kg/cm^2
Accuracy	± 1.5 % of full range
Operating temperature	450°C max.
Dimension of transducer	ϕ22 × 39 mm
Dimension of bellows	ϕ8 × ϕ5 × 0.1 mmt

(2) Differential transformer type (Fig. 7.3.1(B))

The ferritic core of 403 stainless-steel located in the center of the variable differential transformer (LVDT) is connected to the bellows of Inconel 718 for detecting the pressure that withstands the pressure of 50 kg/cm^2. The voltage induced in the secondary coil of the LVDT due to displacement of the core resulted from deformation of the bellows is calibrated with helium pressure.

Specifications

Item	Specifications
Measuring range	0 - 50 kg/cm^2
Accuracy	± 1.5 % of full range
Operating temperature	350°C max.
Dimension of transducer	ϕ18 × 80 mm
Dimension of bellows	ϕ4 × ϕ5 × 0.1 mmt

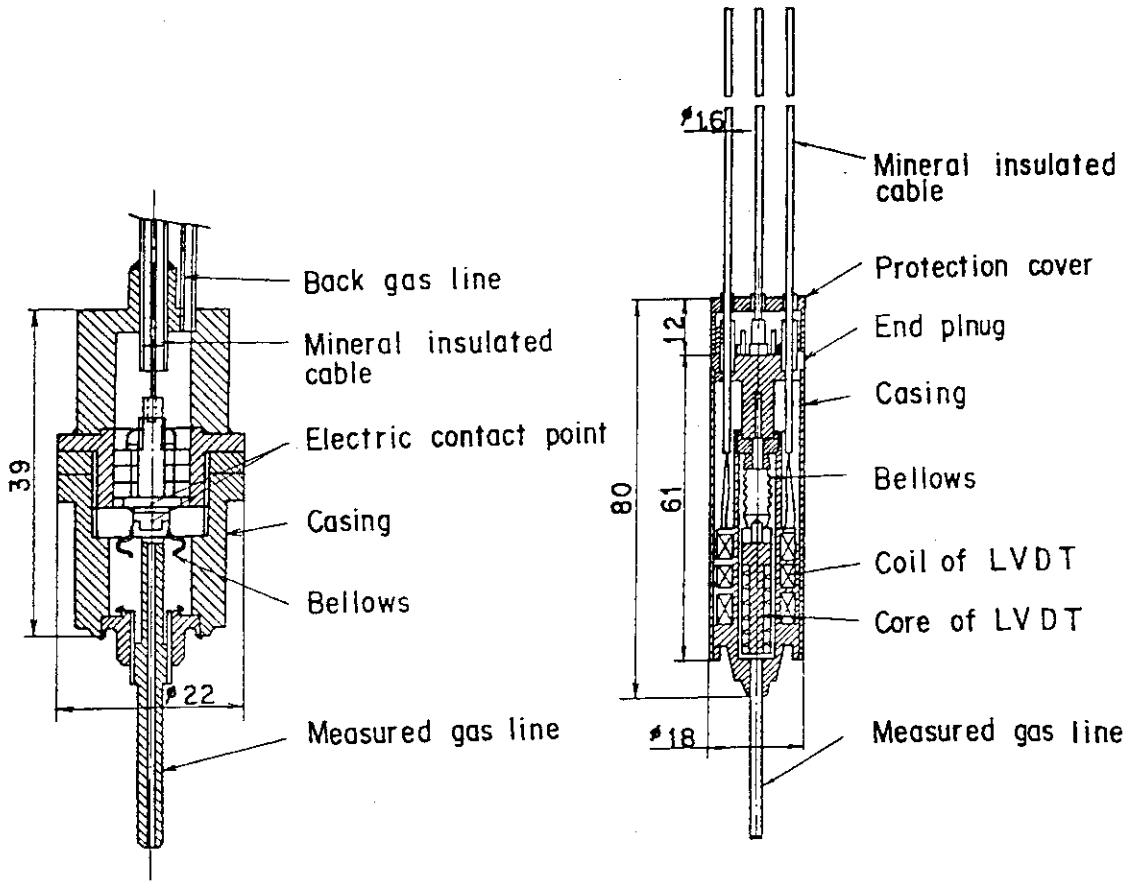

(A) Null-balanced ON-OFF type pressure transducer

(B) Linear variable differential transformer (LVDT) type pressure transducer

Fig. 7.3.1 Pressure transducer

7.4 Bellows

Bellows are used in the capsule for the purpose of stressing the specimens in the in-pile creep measuring capsule, moving components in the temperature ramping capsule. and so on. The bellows are also utilized as a sensing element for gas pressure in the fission gas pressure transducer. Specifications of the bellows used in the capsules and transducers are described in the following. The molded or welded bellows is used properly depending on each objective for application.

(1) Molded bellows

A) for sensing element in pressure transducer

— material	Inconel 718
— dimension	$\phi 6 \times \phi 4 \times 0.1$ mmt
— number of plys	8
— operating pressure	70 kg/cm^2
— operating temperature	400°C

B) for stressing specimen in in-pile creep capsule

— material	Inconel 718
— dimension	$\phi 34 \times \phi 21.5 \times (0.15 + 0.15)$ mmt, double wall
— number of plys	54
— operating pressure	30 kg/cm^2
— operating temperature	400°C

(2) Welded bellows

A) for stressing specimen in in-pile creep capsule

— material	ss-304 L
— dimension	$\phi 35 \times \phi 22 \times (0.15 + 0.15)$ mmt, double wall
— number of plys	135
— operating pressure	28 kg/cm^2
— operating temperature	400°C

B) for displacing a thermal-bond in temperature ramping capsule

— material	ss 304 L
— dimension	$\phi 24 \times \phi 12 \times 0.15$ mmt
— number of plys	312
— operating pressure	10 kg/cm^2
— operating temperature	400°C

7.5 Fluence monitor

Fluence monitors for measuring the neutron dose exposed on the irradiated specimens are loaded with the specimens in the capsule and/or loop assembly. The monitor of ^{54}Fe sheathed in the tube of pure alumina or aluminum are applicable to measure the fast neutron flux dose of above 1 MeV. The neutron dose is obtained by detecting the gamma ray from ^{54}Mn produced by the reaction of $^{54}Fe(n,p)^{54}Mn$ using Ge-detector. The wire of 0.17 w/o Co-Al sheathed in the tube of pure alumina or aluminum are applied to measure the thermal flux dose, and the flux dose is also obtained by detecting the gamma ray from the reaction of $^{60}Co(n,\gamma)^{60}Co$. Positions of the fluence monitors loaded in the capsule are arranged, in order to obtain both radial and axial distributions of flux dose.

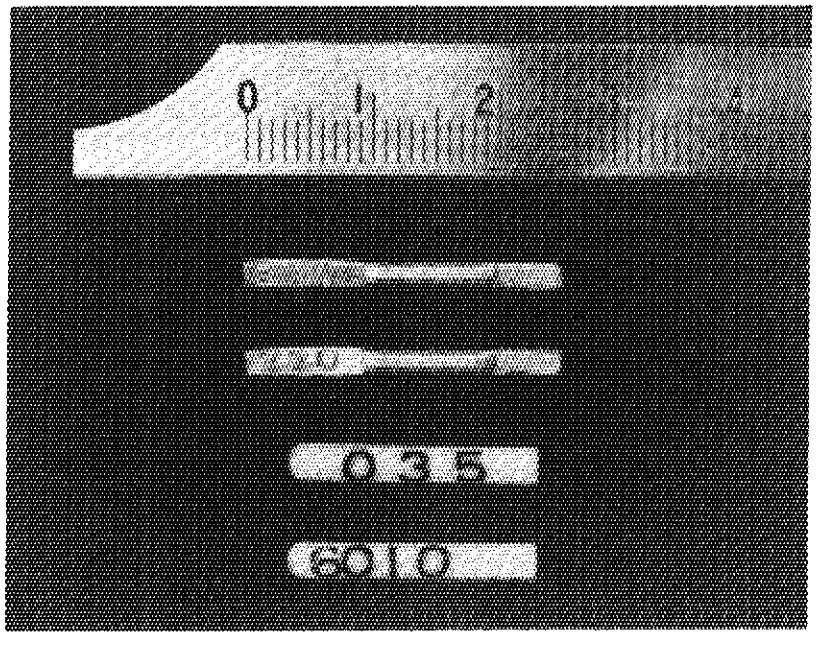

Fig. 7.5.1 Fluence Monitors

7.6 Self powered neutron detector

Self powered neutron detectors (SPND) are used in order to obtain the power of the fuel pin irradiated in the capsule and/or loop by continuous measurement of the thermal neutron flux during irradiation. The SPND with gamma compensation used in JMTR is shown in Fig. 7.6.1. Specifications are shown in the table.

Specifications

Item	Specification
Emitter	ϕ0.5, ^{51}V, ^{103}Rh and ^{59}Co
Insulator	Al_2O_3
Sheath (Collector)	ϕ1.6 and ϕ2.0, ss-316
Sensitivity	7.7×10^{-23} A/nv·cm (^{51}V) 1.2×10^{-21} A/nv.cm (^{103}Rh) 1.7×10^{-23} A/nv·cm (^{59}Co)
Response time	5.4 min (^{51}V) 68 sec (^{103}Rh) <1 sec (^{59}Co)
Operating temperature	400°C max.

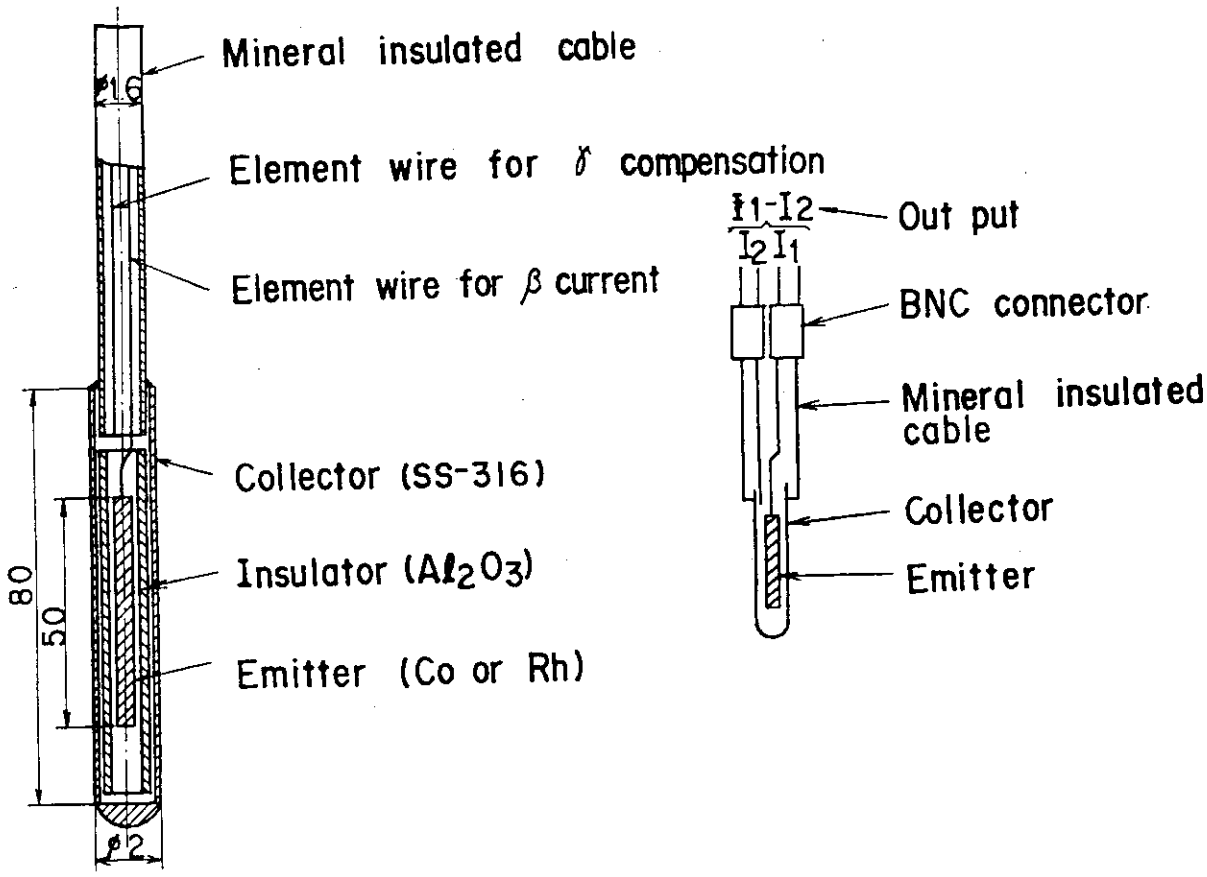

Fig. 7.6.1 Gamma compensated self powered neutron detector

7.7 Turbine flow meter

The turbine flow meter is applied to measure the mass flow rate of water which gives the power of fuel pins loaded in the water loop together with temperature rise of the coolant. The mass flow rate is obtained by measuring electric pulse induced in the pick-up coils with the permanent magnets by rotation of the rotor with blades made of 17-4 PH. The hard metal is used for the bearing on the shaft. The configuration of the flow meter is shown in Fig. 7.7.1.

Specifications

Item	Specification
Dimension of flow meter	ϕ40 × 116 mm
Outside diameter of rotor	25 mm
Number of blades	4
Number of pick-up coils	2
Measurable flow range	100 - 200 l/min
Accuracy	± 1 % F.S.

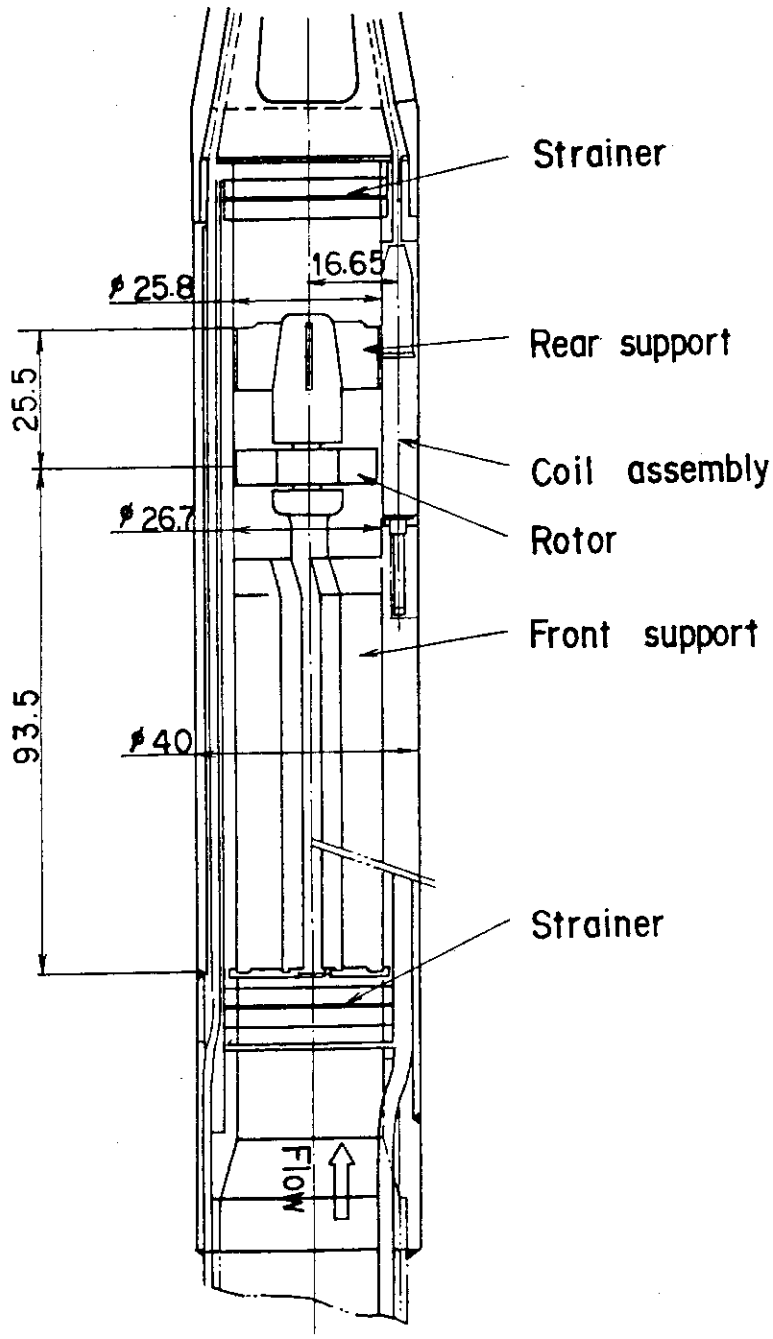

Fig. 7.7.1 Turbine flow meter

8. Data acquisition system

8.1 Hardware

The system is able to handle 529 irradiation data from 24 capsules (including He-3 power control facility), 2 hydraulic rabbit facilities, neutron control facility and 3 loops. 467 of them are analog-type and 62 of them are digital. A high speed 16 bit central computing unit (C.P.U.) processes these data. Main out put devices are a printer, a x-y plotter and two CTRs. Disk memory unit has a sufficient capacity for data storage during 40-day-operation. Data stored in disk are transfered into magnetic tape after operation for permanent storage. An operator can access to the system through an operator console.

8.2 Data collection and monitoring

All signals are sampled at 10 sec interval, filtered, corrected, scaled and stored into designated memory locations in data files. Each data is to be compared with preset values every sampling. Alarm is given to operators if data exceeds limit value. Two standard data files are provided, one is a 24-hour file, in which all data are stored every 1 minute for 24 hours, and other is a reporting file, in which data are stored every 30 minutes with calculated heat generation of loop specimens for 40-day-operation. Another special file, such as a reactor scram transient file for all data and a transient file for specified data, are also provided. All transient files have capacities for 2 hour-storage at 10 sec interval.

During a reactor power up, all data are stored in the start-up file at every power level.

8.3 Display and printing

Irradiation data processed in the system can be displayed in two colour CRTs, one for character and one for graphic. The data also can be printed out in table form and plotted in graphical form for reporting. 08:30, 16:30 and 23:00 hour data of several important operating parameters are to be printed out every next morning for operation records. Desired interval data of selected parameters during the operation can be printed out after the operation for reporting. The whole data of selected parameters during the operation also can be plotted. If required, 1 minute interval data of selected parameters for past 2 hours, 6 hours or 24 hours can be displayed or plotted. Data in transient files also can be displayed or plotted. Power-up-data are displayed with predicted value at 50 MW in course of power up.

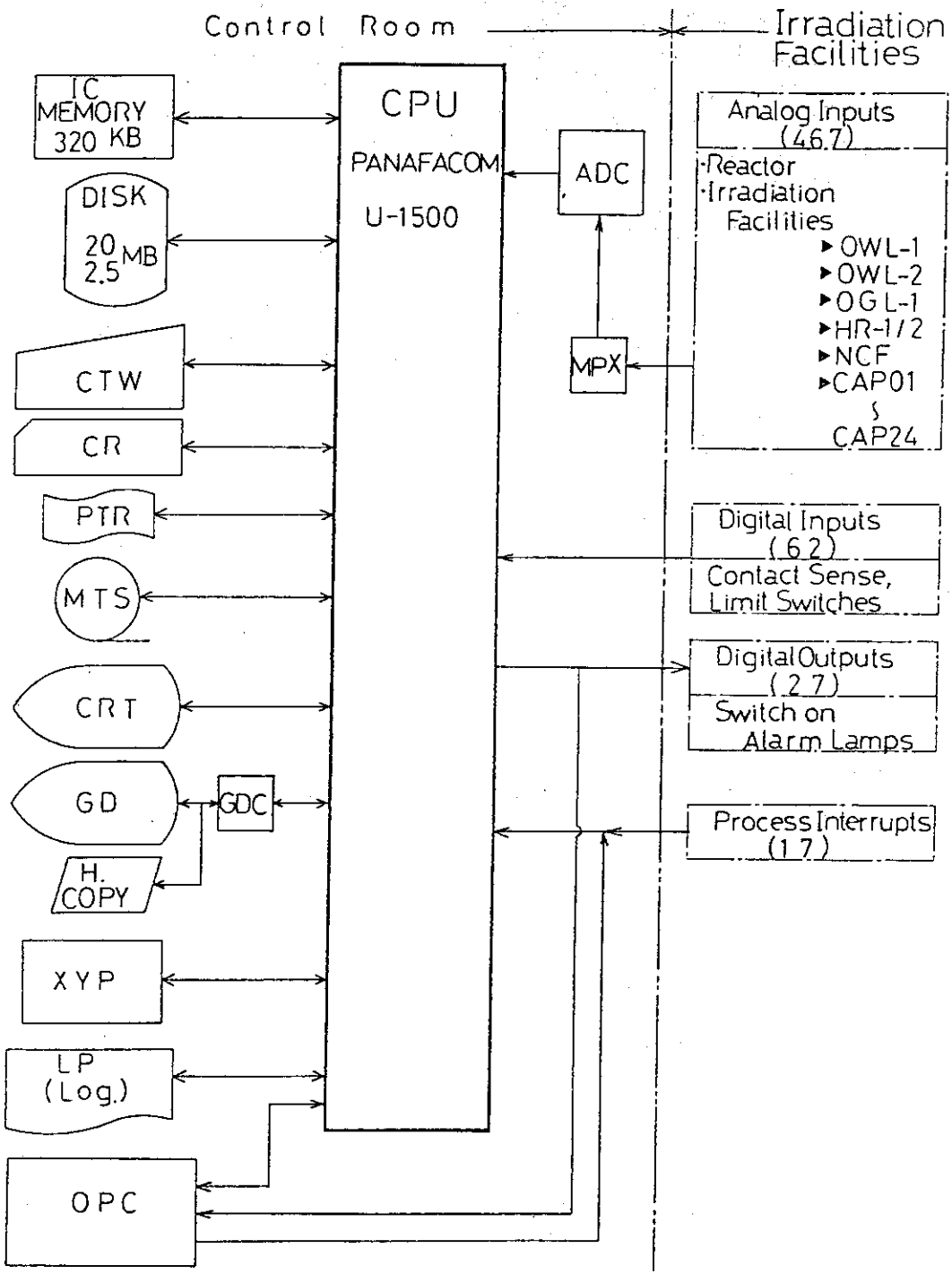

Fig. 8.1 Lay Out of JMTR Irradiation Data Acquisition System

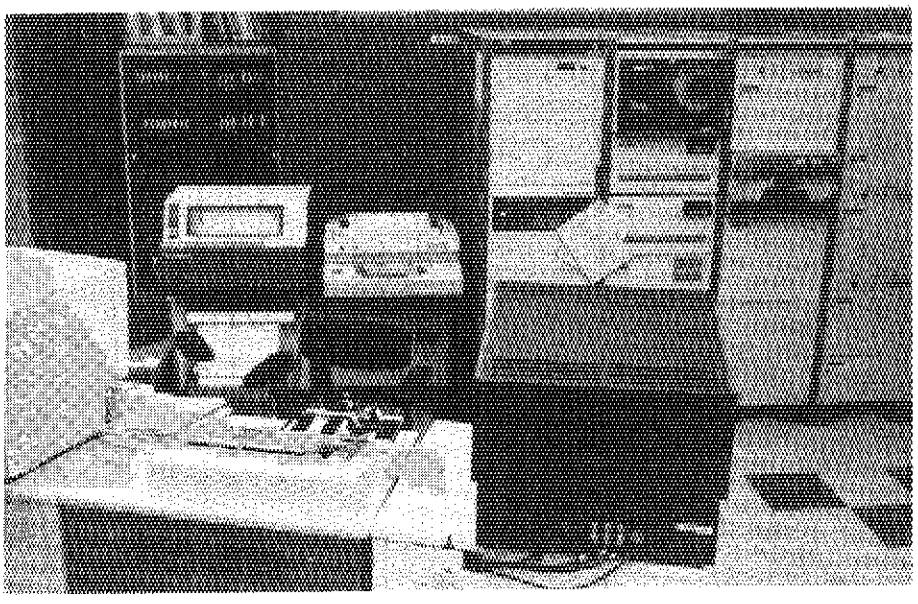

Fig. 8.2 Irradiation Data Acquisition System

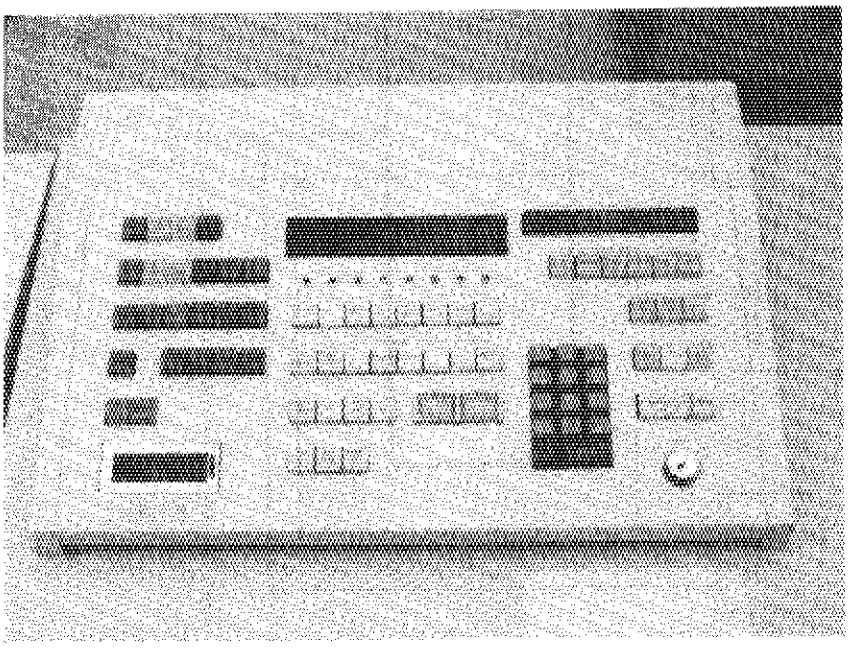

Fig. 8.3 Operator Console

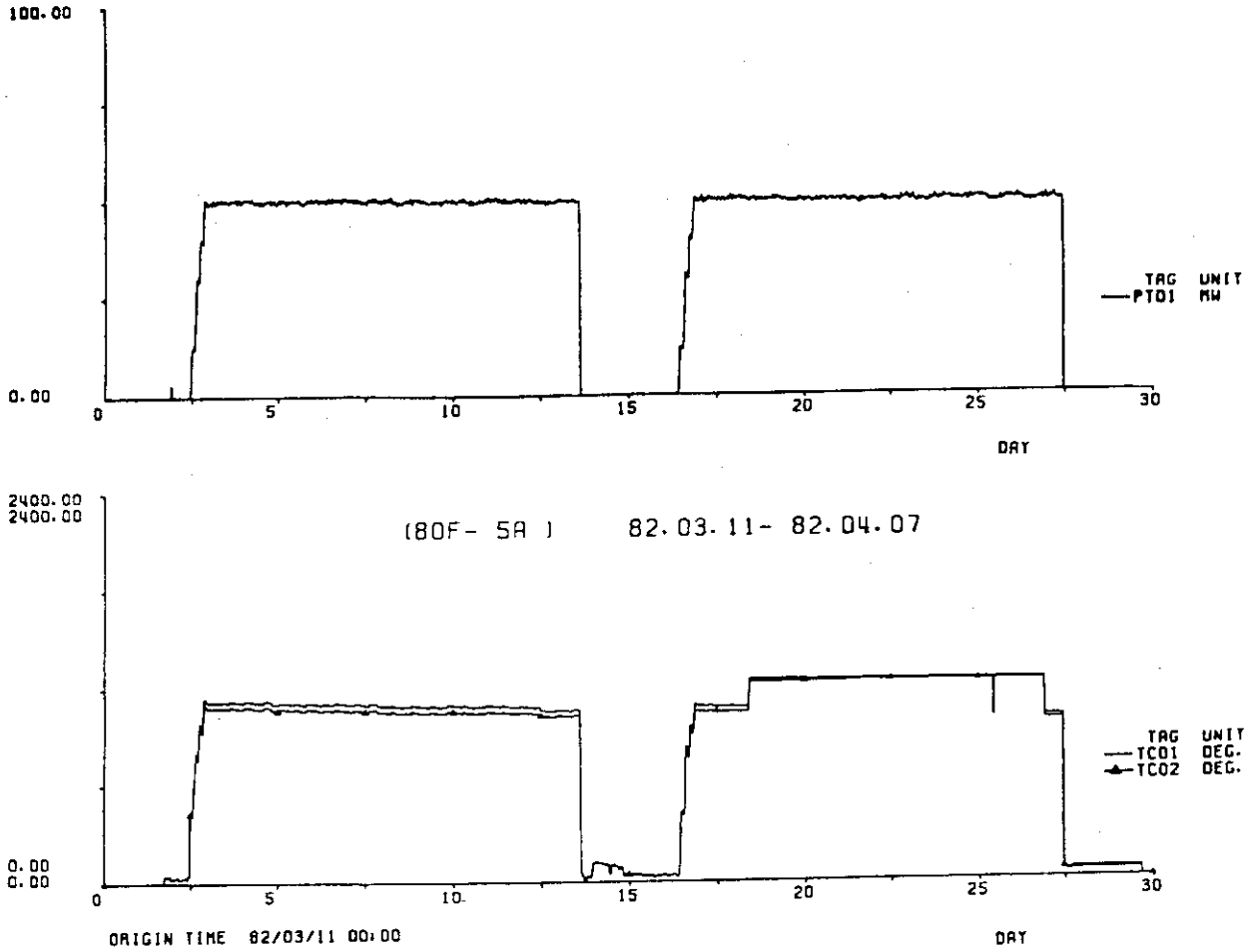

Fig.8.4 JMTR-58CYCLE CAPO2 HISTORY TREND

Table 8.1 **Printed Out-Put Data**

JMTR 58 ｻｲｸﾙ ******* ﾏﾙｼﾝ･ﾏﾙｹｲ･ﾏﾙｺﾝ ｷｬﾌﾟｾﾙ ｳﾝﾃﾝ ｷﾛｸ ******* 58-11

1982 03/20 ﾀﾝﾄｳ 倉橋

		TAG.NO	UNIT	1 8:30	2 16:30	3 23:00
ｹﾞﾝｼﾛ ﾈﾂｼｮｳﾘｮｸ		PT01	MW	49.2	48.5	49.4
80F- 5A	ﾏﾙｼﾝ.80-3	TC01	°C	1094 MAN	1082 MAN	1097 MAN
80M-21J	ﾏﾙｼﾝ.80-4	TC04	°C	878 MAN	873 MAN	883 MAN
77F- 5A	ﾏﾙｼﾝ.77-2	TC03	°C	962 MAN	955 MAN	965 MAN
80M-30U	ﾏﾙｹｲ. 4-1	TC08	°C	607	602	611
80M-18A	ﾏﾙｼﾝ.80-2	TC02	°C	1144 AUT	1163 AUT	1143 AUT
80M-31U	ﾏﾙｼﾝ.80-1	TC07	°C	1020 AUT	1006 AUT	1015 AUT
80F- 3A	ﾏﾙｼﾝ.79-3	TC03	°C	1179 MAN	1174 MAN	1182 MAN
78M- 6U	ﾏﾙｼﾝ.79-2	TC05	°C	648 AUT	648 AUT	649 AUT
79M- 3A	ﾏﾙｼﾝ.79-4	TC06	°C	891 MAN	882 MAN	895 MAN
78M- 9A	ﾏﾙｼﾝ. 7-1	TC03	°C	1065 AUT	1066 AUT	1066 AUT
80M-16A	ﾏﾙｼﾝ. 7-2	TC07	°C	881 MAN	875 MAN	885 MAN
ｷｬﾌﾟｾﾙ ﾊｲｷｶﾞｽ ﾓﾆﾀ		M001	CPM	0.15E 04	0.14E 04	0.14E 04
ｼﾝｸｳﾍﾝﾀﾞｰ ｼﾝｸｳﾄﾞ		V001	TORR	0.11E 01	0.11E 01	0.12E 01

9. Conclusions

General description are given on the various kinds of irradiation facilities in the JMTR. Experimenter is able to choose a suitable facility for his irradiation experiments.

The JMTR wishes to play an important role on not only development of power reactors but also other field of peaceful uses of atomic energy through a wide variety of irradiation experiments.

Acknowledgements

The authors wish to express their appreciation to people for their support to this publication.

References

Publications by JMTRs people on the JMTR in English.

A. JAERI or JAERI-M Reports

1) "Conceptual Design of the Japan Materials Testing Reactor", JAERI 1056, March 1964
2) H. Nakata, "Absolute Power Measurement by Reactor Noise Analysis in JMTR", JAERI-M 5178, Feb. 1973
3) Y. Furukawa, "Irradiation Damage of Beryllium Reflector in JMTR", JAERI-M 6511, April 1976
4) F. Sakurai, "Thermal-Hydraulic Analysis of the JMTR and the JRR-2 with LEU Fuels", JAERI-M 9449, April 1981

B. Journals

1) T. Hayashi, et al., "A Method of In-Pile Calorimetry, Gas Dumping Method", J. of Nucl. Sci. and Technol., 7(1), p51, Jan. (1970)
2) T. Hayashi, et al., "Measurement of Gamma-Heat in the JMTR", J. of Nucl. Sci. and Technol., 9(3), p1, March (1972)
3) I. Tanaka, et al., "Development of Fission Gas Pressure Measurement Technique in JMTR", J. of Nucl. Sci. and Technol., 10(5), p309, April (1973)
4) I. Tanaka, et al., "Irradiation Test of Reluctance Type Pressure Sensor for Measuring Fission Gas Pressure", J. of Nucl. Sci. and Technol., 11(3), p104, March (1974)

9. Conclusions

General description are given on the various kinds of irradiation facilities in the JMTR. Experimenter is able to choose a suitable facility for his irradiation experiments.

The JMTR wishes to play an important role on not only development of power reactors but also other field of peaceful uses of atomic energy through a wide variety of irradiation experiments.

Acknowledgements

The authors wish to express their appreciation to people for their support to this publication.

References

Publications by JMTRs people on the JMTR in English.

A. JAERI or JAERI-M Reports

1) "Conceptual Design of the Japan Materials Testing Reactor", JAERI 1056, March 1964
2) H. Nakata, "Absolute Power Measurement by Reactor Noise Analysis in JMTR", JAERI-M 5178, Feb. 1973
3) Y. Furukawa, "Irradiation Damage of Beryllium Reflector in JMTR", JAERI-M 6511, April 1976
4) F. Sakurai, "Thermal-Hydraulic Analysis of the JMTR and the JRR-2 with LEU Fuels", JAERI-M 9449, April 1981

B. Journals

1) T. Hayashi, et al., "A Method of In-Pile Calorimetry, Gas Dumping Method", J. of Nucl. Sci. and Technol., 7(1), p51, Jan. (1970)
2) T. Hayashi, et al., "Measurement of Gamma-Heat in the JMTR", J. of Nucl. Sci. and Technol., 9(3), p1, March (1972)
3) I. Tanaka, et al., "Development of Fission Gas Pressure Measurement Technique in JMTR", J. of Nucl. Sci. and Technol., 10(5), p309, April (1973)
4) I. Tanaka, et al., "Irradiation Test of Reluctance Type Pressure Sensor for Measuring Fission Gas Pressure", J. of Nucl. Sci. and Technol., 11(3), p104, March (1974)

9. Conclusions

General description are given on the various kinds of irradiation facilities in the JMTR. Experimenter is able to choose a suitable facility for his irradiation experiments.

The JMTR wishes to play an important role on not only development of power reactors but also other field of peaceful uses of atomic energy through a wide variety of irradiation experiments.

Acknowledgements

The authors wish to express their appreciation to people for their support to this publication.

References

Publications by JMTRs people on the JMTR in English.

A. JAERI or JAERI-M Reports

1) "Conceptual Design of the Japan Materials Testing Reactor", JAERI 1056, March 1964
2) H. Nakata, "Absolute Power Measurement by Reactor Noise Analysis in JMTR", JAERI-M 5178, Feb. 1973
3) Y. Furukawa, "Irradiation Damage of Beryllium Reflector in JMTR", JAERI-M 6511, April 1976
4) F. Sakurai, "Thermal-Hydraulic Analysis of the JMTR and the JRR-2 with LEU Fuels", JAERI-M 9449, April 1981

B. Journals

1) T. Hayashi, et al., "A Method of In-Pile Calorimetry, Gas Dumping Method", J. of Nucl. Sci. and Technol., 7(1), p51, Jan. (1970)
2) T. Hayashi, et al., "Measurement of Gamma-Heat in the JMTR", J. of Nucl. Sci. and Technol., 9(3), p1, March (1972)
3) I. Tanaka, et al., "Development of Fission Gas Pressure Measurement Technique in JMTR", J. of Nucl. Sci. and Technol., 10(5), p309, April (1973)
4) I. Tanaka, et al., "Irradiation Test of Reluctance Type Pressure Sensor for Measuring Fission Gas Pressure", J. of Nucl. Sci. and Technol., 11(3), p104, March (1974)

5) I. Kondo, et al., "Experimental Evaluation of Reactor Neutron Spectrum in Irradiation Field", J. of Nucl. Sci. and Technol., 18(6), p461, June (1981)

C. Conferences

1) S. Ouchi, et al., "Research and Development for the VHTR by High-Temperature Helium Gas Loops", IAEA-SM-200/15, 1976

2) M. Mizuho, et al., "Specimen Fission Rate Estimation in the JMTR", Proceedings of the Second ASTM-Euratom Symp. on Reactor Dosimetry, EUR-5667, 498 (1977)

3) T. Tanaka, et al., "Design and Performance Test of OGL-1 Purification System", Proceedings of the U.S.-Japan Seminar on HTGR Safety Technology, Nov. 24 to 25, 1978, Fuji Japan

4) K. Sakurai, "Fast Neutron Spectrum Measurement in the JMTR", Proceedings of the Third ASTM-Euratom Symp. on Reactor Dosimetry, EUR-6813, 599 (1980)

5) O. Baba, "F.P. Plate-out Study using In-pile Loop OGL-1", Paper presented in the IAEA Specialists Meeting on Coolant Chemistry, Plate-out and Decontamination in Gas-cooled Reactors, Dec. 2 to 4, 1980, Julich W.G.

6) R. Oyamada, et al., "An Analytical Study of Reactivity Transient Responses to JMTRC HEU and MEU Fuel Cores", IAEA-SR-77/35, 1981