JAERI-M
86-079

IMPLEMENTATION OF REACTOR SAFETY ANALYSIS CODE CATHARE AND ITS USE ON FACOM M-380

May 1986

Misako ISHIGURO, Naohisa SHINOZAWA*
Mineyoshi TOMIYAMA and Masahide FUJISAKI*

日本原子力研究所
Japan Atomic Energy Research Institute

JAERI-Mレポートは，日本原子力研究所が不定期に公刊している研究報告書です。
入手の問合わせは，日本原子力研究所技術情報部情報資料課（〒319-11茨城県那珂郡東海村）あて，お申しこしください。なお，このほかに財団法人原子力弘済会資料センター（〒319-11茨城県那珂郡東海村日本原子力研究所内）で複写による実費頒布をおこなっております。

JAERI-M reports are issued irregularly.
Inquiries about availability of the reports should be addressed to Information Division Department of Technical Information, Japan Atomic Energy Research Institute, Tokai-mura, Naka-gun, Ibaraki-ken 319-11, Japan.

編集兼発行　日本原子力研究所
印　　刷　いばらき印刷㈱

Implementation of Reactor Safety Analysis Code CATHARE and Its Use on FACOM M-380

Misako ISHIGURO, Naohisa SHINOZAWA*,
Mineyoshi TOMIYAMA and Masahide FUJISAKI*

Computing Center, Tokai Research Establishment
Japan Atomic Energy Research Institute
Tokai-mura, Naka-gun, Ibaraki-ken

(Received May 2, 1986)

CATHARE is an advanced safety analysis code developed at the Nuclear Research Center of Grenoble in France. The code simulates thermohydraulic phenomena involved in loss of coolant accidents in pressurized water reactors. The code has been introduced into JAERI as a part of the technical exchange between the JAERI ROSA-IV Program and the French BETHSY-CATHARE Program. The code was delivered in the form of 23 files containing 115,000 statements in total. A large part of CATHARE code has been written in an extended Fortran language 'Esope' which is mainly used for managing dynamic memory allocation. The JAERI version is created from the IBM version which has been used on Amdhal computer at ISPRA. Some modifications are required in order to implement the CATHARE code at JAERI because of difference in softwares. In this report, the overview of the code structure, the JAERI usage, the implementation method, the error correction method, the problems special to install the code in JAERI, and the distribution of computing time are described.
code in JAER

Keywords : CATHARE, LOCA, ROSA-IV, Computer Codes, Safety Analysis, Reactor Transient, Reactor Safety, FACOM M-380

---

* On leave from FUJITSU

原子炉安全性解析コードCATHAREのFACOM M－380への導入とコードの使用方法

日本原子力研究所東海研究所計算センター
石黒美佐子・篠沢　尚久*・富山　峯秀・藤崎　正英*

（1986年5月2日受理）

CATHAREはフランスのグルノーブル原子力研究センターで開発された安全性評価コードである。コードは，加圧水型原子炉の冷却材喪失事故時の熱流動現象を模擬する。本コードは，原研のROSA－Ⅳ計画とフランスのBETHSY－CATHARE計画間の技術交流の一部として原研に導入された。コードは総計23ファイル，115,000ステートメントから成る大規模なもので，その大半は，Esopeと呼ばれる独自のFortran拡張言語で書かれている。導入された版は，ISPRAのAmdhal計算機用に作られたIBM版に基づいているが，ソフトウェアの差違などにより，いくつかの修正が必要となった。

本報告書では，CATHAREコードとその図形処理システムについてプログラム構造の概要，原研での使用方法，導入方法，エラー修正方法，原研での導入に際して生じた問題点，計算時間分布などが述べられる。

東海研究所：〒319－11　茨城県那珂郡東海村白方字白根2－4
＊ 外来研究員（富士通）

Contents

目　　次

1. Introduction

CATHARE is an advanced safety code which was developed at the Nuclear Research Center in Grenoble of the French Commissariant a l'Energie Atomique (CEA) by a joint team formed by CEA, EDF, with the participation of FRAMATOME. The code simulates thermohydraulic phenomena involved in loss of coolant accidents in pressurized water reactors. CATHARE code represents water-steam two-phase flow by a one-dimensional two phase, six equation model using the staggered mesh method. For transient calculation, a fully implicit finite deference scheme is adopted.

The code was introduced into JAERI as a part of the technical exchange between the JAERI ROSE-IV Program and the French BETHSY-CATHARE Program. The code was delivered in the form of 23 files in total, 12 files containing about 80000 statements of the CATHARE code, and 11 files about 35000 statements of graphic software. A large part of CATHARE code was written in a special language 'Esope'. The Esope is an extended Fortran language which is mainly used for managing dynamic memory allocation.

The JAERI version is created from an IBM version which was used on Amdhal computer at ISPRA. The guide for installing the CATHARE code at JAERI[(2)] was provided by the CATHARE team of CEA Grenoble. The implementation method at JAERI basically depends on the guide. The hardware of the Amdahl computer is 100% compatible with FACOM M-series computer used at JAERI, but ISPRA uses IBM Fortran and IBM MVS operating system. Therefore, a small difference is found in software. Modifications were also required for the graphic software depending on the graphic terminals in use.

As for the graphics we newly added a means to draw the graphs on a laser printer, like those available for the RELAP5 and TRAC codes.

In Chapter 2, the program structure overview is described. In Chapters 3 and 4, how to use the CATHARE code and the graphic systems are described, respectively, from user's point of view. In Chapters 5 and 6, the implementation methods used for the CATHARE code and its graphics on JAERI computers are described, respectively. In Chapter 7, the problems special to the implementation on FACOM M-380 in JAERI is given. And in Chapter 8, the modification method of CATHARE code is given in preparation for updatting in the future and in Chapter 9 the computing time distribution over the CATHARE subroutines are shown.

The user can know how to use the CATHARE code by reading from Chapters 1 through 4. The rest describes on the implementation of CATHARE at JAERI.

*** Most of the documents of CATHARE code are presently written in French. Inframe of the ROSA-IV/BETHSY-CATHARE agreement, a French research staff is resident at JAERI Tokai and can provide help to go through the difficulties of the French language. In fact, he helped us in the translation from French to English in needs, and what is more, he helped us in the validation of the computed results.

2. Program Structure of CATHARE Code and Its Graphic Software

2.1 CATHARE Code and the Programs Associated to It

The CATHARE code is written so that it can be run on different computers, presently CRAY, IBM, SEL, VAX, and CDC. Therefore, some of the program statements are selective to the computer in use.

The CATHARE code is a code system which consists of several parts. The overview of the system flow is shown in Fig. 2.1. The file names and the contents are shown in Table 2.1. The use of some file is optional to implement at JAERI.

The CATHARE code is constructed from the following four parts which are used in a form of library type load module :

- GEMAT library mainly for managing memory,
- SYSTEM library for connecting the calculational modules and for controlling the over all calculation,
- MODULE library for calculating the system components,
- GRILLE library for treating the physical model,

and from the following mathematical libraries :

- GEMAT library written in the IBM assembler language to manage the use of memory,
- mathematical functions (corresponding to FACOM SSL and JSSL at JAERI) and some system functions,
- IMSL library commercially sold of which only LEQT1B is used,
- LINPACK library developed in ANL of which only SGEFA and SGESL are used.

Among the programs above, Esope precompiler itself, GEMAT and SYSTEM are written in Esope. The programs written in Esope must be translated into Fortran by using the Esope precompiler.

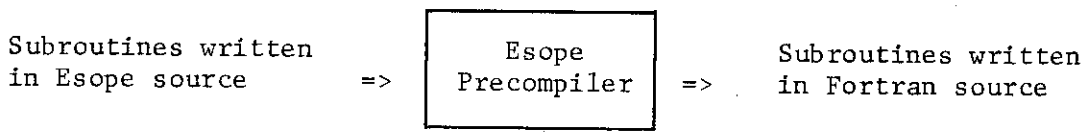

The input data file JAPTEST·DATA has a special feature. Each of CATHARE data in the file consists of 2 blocks. One is the input data itself and another is the main program of CATHARE code. The main program is to control the calculational flow of CATHARE, - steady

state, stabilizing transient, transient and so on. The main program happens to be written in Esope. The input data list of a sample problem CANONGB is shown in Fig. 2.2, where the lines from beginning to GO·IBM are input data and the rest are main routine. The CANONGB simulates the experiment of horizontal pipe with a large break.

In order to run the CATHARE code, the following software tools (load modules) are necessary (see Fig. 2.1) :

- ESOP　precompiler for translating the subroutines written in Esope into Fortran,
- SUITE　postprocessor for the Esope precompiler, which is used for dividing a long Fortran statement into more than two statements. Because the translated subroutine from Esope happens to have the statement with more than 20 continuation lines,
- CREE　separator used for separating the data module into 2 blocks ; input data file and main program file written in Esope or Fortran,
- CATHARE　load module for CATHARE code.

2.2 Graphic Software

Two kinds of graphic softwares were provided by CEA. One is so called as classical graphics for line plotting, which is available on TEK411X and TEK4014 (Tektronix), and IBM 3279. Another is a colour graphics so called as DESSIN. The DESSIN is designed for TEK4118 and in a smaller extent for TEK411X and IBM 3279. The DESSIN is used in conversational mode.

The classical graphics has been implemented at JAERI, presently on TEK4014 and TEK4115 (Fig. 2.1). There are two steps for drawing the graphs in classical graphics. The first step is named TRACE to generate the intermediate graphical language (LGI) from the results of CATHARE code. The second one is to plot the graphs on a graphic terminal. Graphic output on a laser printer in batch mode is newly developed at JAERI, where the graphs can be obtained in one step without LGI generation.

We tested the colour graphics on TEK4114 for the calculational results of a sample problem CANONGB. We tried a simple drawing. It is very difficult for us to test the full facilities of DESSIN because we have not sufficient knowledge of thermohydraulic calculations. The

advanced colour graphics on TEK4118 also was not tested because we have no such terminal. There are also two steps in colour graphics. The first step is EXTRACT which extracts a reduced graphic data TOPO from the results of CATHARE code. The second step is DESSIN which draws graphs in conversational mode.

Table 2.1 Files delivered from CEA Grenoble to JAERI
(Based on Amdahl Version of ISPRA)

No.	Original File name	Number of statements	Contents
1.	JAERITRA.ESOPE	10548	Precpmpiler written in Esope language
2.	JAERITRA.FORT77	12373	Precompiler written in Fortran, translated from JAERITRA.ESOPE
3.	JAERIGEM.ESOPE	7806	GEMAT in Esope language + Some subroutines in IBM assembler, used for managing the memory
4.	JAERIGEM.FORT77	5500	GEMAT written in Fortran, translated from JAERIGEM.ESOPE
5.	JAERISYS.ESOPE	23744	SYSTEM written in Esope
6.	JAERISYS.FORT77	37831	SYSTEM written in Fortran, translated from JAERISYS.ESOPE
7.	JAERIMOD.FORT77	25038	Calculational MODULE written in Fortran
8.	JAERIGRI.FORT77	6912	GRILLE written in Fortran for physical models
9.	JAERILOG.FORT77	19113	Routines in Fortran for free format input, separator, etc,
10.	JAPTEST.DATA77	4777	Data (input data and main program) 7 kinds od data are stored
11.	JAERIINC.FORT77	691	Library of segments (INCLUDE file)
12.	JAERIPRO.CLIST	352	Procedures and JCL
13.	CATB.CNTL	59	JCL for generation of TATB, IFINC, etc. MVSTKB is used for IFINC.
14.	CATB.CLIST	1080	TSS command procedures for generation of DESSIN and in order to use them
15.	CATB.FORT77	185	IFINC to treat with %IF and %INC,and NCAL (not used)
16.	CATTEKT.ASM	1023	Subroutines written in IBM assembler for TEKTRONIX I/O (ADEIN, ADEOUT), dynamic allocation, etc.
17.	CATB.DATA	68	Sample data for the classical graphics
18.	DESSIN.FORT77	10347	Colour graphics _ It must be treated by by IFINC before compilation
19.	CATEDIT.ESOPE	6922	Programs allowing plots on a terminal from the LGI generated by TATB
20.	CATTEKT.FORT77	1735	Subroutines used by DESSIN in order to make command to T4115
21.	CATTRACE.FORT77	7756	Classical graphics; for generating LGI from CATHARE results
22.	CATTATB.FORT77	6175	Graphic library developed in CISI Co.

Some modifications are made on above files due to JAERI implementation and version-up. The directory lists of the files are in Appendix B.

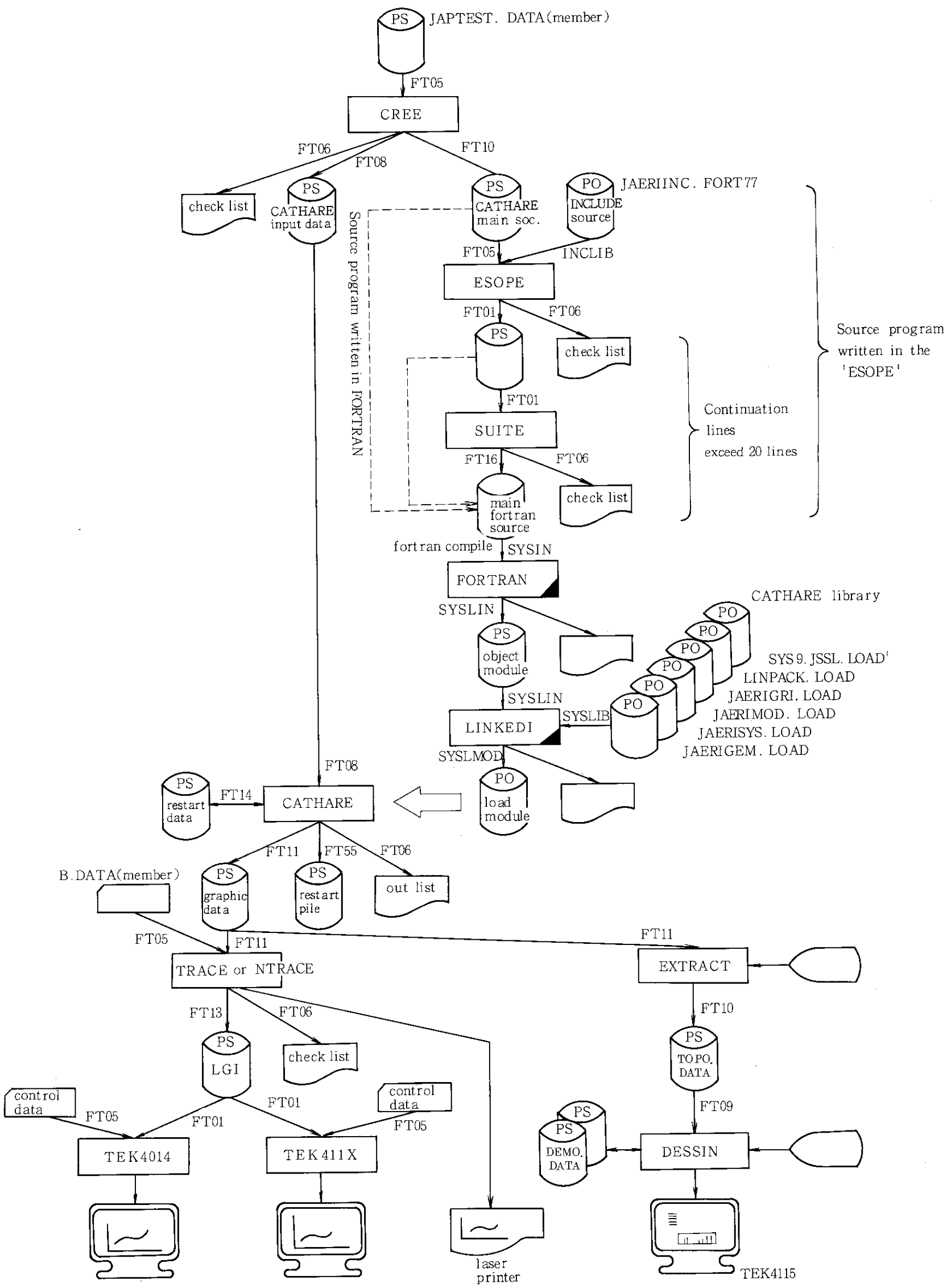

Fig. 2.1 CATHARE system flow

```
**** TSO FOREGROUND HARDCOPY ****
DSNAME=ZCYa.JAPTEST.DATA                                  (CANONGB )
C                                                                          0000
C JEU DE DONNEES COMPLET POUR TOS                                          0000
C                                                                          0000
C DATE DE CREATION     : 14/12/84                                          0000
C DATE DE MISE A JOUR : 12/04/85                                           0000
C SITE    : GRE                                                            0000
C AUTEUR :                                                                 0000
C                                                                          0000
C*****************************************                                 0000
C EXPERIENCE CANON HORIZONTAL GROSSE BRECHE *                              0000
C*****************************************                                 0000
C                                                                          0000
C DEPRESSURISATION ADIABIATIQUE D'UNE CAPACITE CYLINDRIQUE HORIZONTALE     0000
C ACCIDENT DE TYPE GROSSE BRECHE                                           0000
C                                                                          0000
C          DIAMETRE DE BRECHE = 0.1023 M                                   0000
C                                                                          0000
C*************************************************************************0000
C ESSAI REFERENCE              *     L     *     D     *           *      *0000
C*************************************************************************0000
C PRESSION INITIALE            *  3.2E6    *   3.2E6   *           *      *0000
C TEMP LIQUIDE INITIALE        *  230.0    *   200.0   *           *      *0000
C DUREE EXPERIENCE   S         *   0.7     *    0.8    *           *      *0000
C*************************************************************************0000
C                                                                          0002
C OVARLI STANDARD                                                          0002
C ***************                                                          0002
C                                                                          0002
C INTRODUIRE P ET TLIQ INITIALE EN QUATRIEME PARTIE                        0002
C INTRODUIRE TMAX DANS LE CALCUL DU TRANSITOIRE                            0002
C VERIFIER LES FREQUENCES D'IMPRESSION                                     0002
C                                                                          0002
C                                                                          0002
C VERSION CATHARE UTILISEE : CATHARE 1, VERSION 1 OU 1.1, REV 2 OU REV 30002
C                                                                          0002
C                                                                          0002
C POINTS DE REPRISE POSSIBLES (NUMERO LOGIQUE 55) :                        0002
C ________________________________________________                         0002
C                                                                          0002
C PERMANENT                                                                0002
C TRANSITOIRE STABILISE                                                    0002
C FIN DU TRANSITOIRE                                                       0002
C                                                                          0002
C                                                                          0002
C*************************************************************************0002
C                                                                          0002
C  PREMIERE PARTIE  :  DEFINITION DE LA TOPOLOGIE DU CIRCUIT               0002
C                                                                          0002
C*************************************************************************0002
C                                                                          0002
 TOPOS=3                                                                   0002
      ENTRE  BORGNE          1 A AVAL          OUVERT                     0002
      CANAL  TUYAU    HYDRO  2 A AMONT B AVAL  HEXI                       0002
      BRECHE CL4             1 B AMONT         OUVERT                     0002
C                                                                          0002
C*************************************************************************0002
```

Fig. 2.2 Input data list of a sample problem CANONGB (1)

```
C
C
C  DEUXIEME PARTIE  :  DEFINITION DE LA GEOMETRIE DU CIRCUIT
C
C*****************************************************************
C
C GEOM=
C   CANAL      2
C                D.        8.219419E-3  3.213849E-1  1.023E-1
C                4.389     8.219419E-3  3.213849E-1  1.023E-1
C
C*****************************************************************
C
C
C  TROISIEME PARTIE  :  DEFINITION DU MAILLAGE DES ELEMENTS
C
C*****************************************************************
C
C
C  MAILLAGE ADAPTE A LA COMPARAISON MESURES-CALCUL
C
C
C  LES COTES DES POINTS DE MESURES DE PRESSION ET DE TAUX DE VIDE
C  CORRESPONDENT A CELLES DE NOEUDS SCALAIRES(NS)
C
C  COTES DE MESURES :
C
C  PRESSION          : P1          P2          P3          P4          P5
C      M             : 0.5(NS) 1.356(NS) 1.646(NS) 2.692(NS) 3.885(NS)
C  TAUX DE VIDE      : ALFA
C      M             : 1.502(NS)
C
C
C
C
C   MAIL=
C   CANAL 37
C   EQUIDI 0.600        0.          FROT 0.         3
C   EQUIDI 0.350        0.          FROT 0.         2
C   EQUIDI 0.170        0.          FROT 0.         1
C   EQUIDI 0.153        0.          FROT 0.         1
C   EQUIDI 0.292        0.          FROT 0.         2
C   EQUIDI 0.142        0.          FROT 0.         1
C   EQUIDI 1.040        0.          FROT 0.         8
C   EQUIDI 0.789        0.          FROT 0.         6
C   EQUIDI 0.120        0.          FROT 0.         1
C   EQUIDI 0.100        0.          FROT 0.         1
C   EQUIDI 0.084        0.          FROT 0.         1
C   EQUIDI 0.070        0.          FROT 0.         1
C   EQUIDI 0.07651      0.          FROT 0.         1
C   EQUIDI 0.06625      0.          FROT 0.         1
C   EQUIDI 0.05521      0.          FROT 0.         1
C   EQUIDI 0.04601      0.          FROT 0.         1
C   EQUIDI 0.03834      0.          FROT 0.         1
C   EQUIDI 0.03195      0.          FROT 0.         1
C   EQUIDI 0.02662      0.          FROT 0.         1
C   EQUIDI 0.02219      0.          FROT 0.         1
C   EQUIDI 0.01849      0.          FROT 0.         1
C   EQUIDI 0.01541      0.          FROT 0.         1
C   EQUIDI 0.01284      0.          FROT 0.         1
C   EQUIDI 0.01070      0.          FROT 0.         1
C   EQUIDI 0.00892      0.          FROT 0.         1
C   EQUIDI 0.00741      0.          FROT 0.         1
C   EQUIDI 0.00619      0.          FROT 0.         1
C   EQUIDI 0.00516      0.          FROT 0.         1
C
C
C
C   EQUIDI 0.00430      0.          FROT 0.         1
C   EQUIDI 0.00358      0.          FROT 0.         1
C   EQUIDI 0.00299      0.          FROT 0.         1
C   EQUIDI 0.00249      0.          FROT 0.         1
C   EQUIDI 0.00207      0.          FROT 0.         1
C   EQUIDI 0.00173      0.          FROT 0.         1
C   EQUIDI 0.00144      0.          FROT 0.         1
C   EQUIDI 0.00120      0.          FROT 0.         1
C   EQUIDI 0.00100      0.          FROT 0.         1
C
C*****************************************************************
C
C
C  QUATRIEME PARTIE  :  DEFINITION DU REGIME PERMANENT
C
C*****************************************************************
C
C
C   ORDRE = 0 PARAM
C         1 A  3.2E+6 TL10 230.0  HVSAT 1.E-5 1.E-5 1.E-5
C         ENTRE  CANAL BRECHE
C
C*****************************************************************
C
C
C  CINQUIEME PARTIE  :  DEFINITION DES SORTIES( GRAPHIQUE , LISTING )
C
C*****************************************************************
C
C
C   IMPR1 =3
C                PERIODE TOUS       2
C                PERIODE XJONCTX    1
C                                        TRACE TOUS     1
C                IMPRIME           -11
C
C   IMPR2 =3
C                PERIODE TOUS      -0.04
C                PERIODE XJONCTX    1
C                                        TRACE TOUS     1
C                IMPRIME           -11
C
C*****************************************************************
C
C
GO.IBM
C
C*****************************************************************
C
C  SIXIEME PARTIE  :  DEROULEMENT DU CALCUL
C
C*****************************************************************
C
C  VARIABLE LOGIQUE DE CONTROLE DES IMPRESSIONS
C
      LOGICAL NLMOD
C
            NLMOD = .TRUE.
C
C*****************************************************************
C  I.) ACQUISITIONS DIVERSES
C*****************************************************************
C
      CALL REDINI(8,1)
C
```

Input data

Main program

Fig. 2.2 Input data list of a sample problem CANONGB (2)

```
C ACQUISITION DE LA TOPOLOGIE( ET IMPRESSION )
C
      CALL TOPOLU(TOPOS)
      CALL TOPODI
C
C ACQUISITION DE LA GEOMETRIE( ET IMPRESSION )
C
      CALL GEOMLU(GEOM)
      CALL GEOMDI
C
C ACQUISITION DU MAILLAGE     ( ET IMPRESSION )
C
      CALL MAILLU(MAIL)
      CALL MAILDI
C
C ACQUISITION DES DONNEES DU REGIME PERMANENT
C
      CALL CIRCLU(ORDRE)
C
C INITIALISATION MEMOIRES
C
      CALL GOSEG
C
C ACQUISITION DES FREQUENCES DE SORTIE
C
      CALL MODIF(IMPR1)
C
C LABEL DE STOCKAGE
C
            NLAB = 0
C
C*********************************************************************
C  2.) CALCUL DU REGIME PERMANENT
C*********************************************************************
C
      CALL GOPERM
C
C STOCKAGE DU PERMANENT
C
            TEMPS = 0.
            DT    = 0.
C
            NLAB  = NLAB + 1
      CALL GOSAUV(TEMPS,DT,55,NLAB)
C
C
C*********************************************************************
C  3.) CALCUL DU REGIME TRANSITOIRE DIT STABILISE
C      ( PAS DE TEMPS DE 100 SECONDES , LE TEMPS DE TRANSITOIRE REEL
C      SIMULE RESTANT A ZERO )
C*********************************************************************
C
            TEMPS=0.
            DT=100.
C
      CALL GOTRAN(TEMPS,DT)
C
C STOCKAGE DU TRANSITOIRE STABILISE
C
            NLAB = NLAB + 1
```

```
      CALL GOSAUV(TEMPS,DT,55,NLAB)
C
C
C*********************************************************************
C  4.) CALCUL DU REGIME TRANSITOIRE
C*********************************************************************
C
C CHOIX DU PAS DE TEMPS INITIAL
C
            DT    =5.E-4
C
C CHOIX DU TEMPS ET DU PAS DE TEMPS MAXIMUM
C
            TMAX = 0.7
            DTMX = 0.5
C
C CHOIX DU NOMBRE DE PAS DE TEMPS MAXIMUM
C
            NPAS = 500
C
C BOUCLE SUR LES PAS DE TEMPS
C
      DO 1000 I=1,NPAS
C
C INCREMENTATION DU TEMPS
C
            TEMPS=TEMPS+DT
C
C TEST D ARRET SUR TMAX
C
         IF (TEMPS.GT.TMAX) GO TO 1001
C
C TEST POUR LA FREQUENCE D'IMPRESSION
C
      IF ((TEMPS.GE.0.10).AND.NLMOD) THEN
      CALL MODIF(IMPR2)
            NLMOD =.FALSE.
         ENDIF
C
C CALCUL DU PAS DE TEMPS
C
      CALL GOTRAN(TEMPS,DT)
C
C LIMITE SUPERIEURE SUR PAS DE TEMPS
C
         IF (DT.GT.DTMX) DT=DTMX
C
 1000 CONTINUE
C
C
C FIN DE LA BOUCLE SUR LES PAS DE TEMPS
C
C
C STOCKAGE DU DERNIER PAS DE TEMPS DE TRANSITOIRE
C
 1001        NLAB = NLAB + 1
      CALL GOSAUV(TEMPS,DT,55,NLAB)
C
C
  RETURN
  END
```

Fig. 2.2 Input data list of a sample problem CANONGB (3)

3. How to Use the CATHARE Code

3.1 Program Flow

In the usual run, there are at least five steps before getting the graphical results (see Fig. 2.1).

(1) Execute CREE to extract the main program from input file if the main program is stored with the input data like the input file JAPTEST·DATA.

(2) Precompile the main program from Esope to Fortran.

(3) Compile the main program.

(4) Link the SYSTEM library GEMAT library, GRILLE library, CATHARE library, LINPACK library and JAERI SSL library to the main program.

(5) Execute the CATHARE code.

(6) Execute TRACE for classical graphics or EXTRACT for colour graphics. And execute NTRACE in batch mode in order to get graphs on laser printer directly.

(7) Draw the graphs by using TEK4014 and TEK4115 for classical graphics, and DESSIN for colour graphics on TEK4115.

If the main program is written in Fortran, skip (2).
JCL list (1) - (5) is shown in Fig. 3.1.

3.2 CATHARE Code Run

Fig. 3.2 shows program flows and files in use. Note that

(1) The parameter for the Esope precompiler on the JAERI computer is
'FORT=IBM,FORT77,CHAR=COMPLET'.

(2) DD names FT14 and FT55 of CATHARE run are not dummy.

```
***************
** FULLRUN  **
***************

   T(5)  W(4)  C(4) I(5)   U(J9303)                                  00010000  FULLRUN
//JOBPROC DD DSN=J9303.PROCLIB.CNTL,DISP=SHR                          00020000  FULLRUN
//*                                                                   00030000  FULLRUN
//*        ******************************************                 00040000  FULLRUN
//*        ********    SEPARATOR CREE RUN    ********                 00050000  FULLRUN
//*        ******************************************                 00060000  FULLRUN
//*                                                                   00070000  FULLRUN
//CREE   EXEC PGM=CREE                                                00080000  FULLRUN
//STEPLIB  DD DSN=J9303.TRANS.LOAD,DISP=SHR                           00090000  FULLRUN
//FT05F001 DD DSN=J9303.P010.FORT77(ERSTUBE),DISP=SHR,LABEL=(,,,IN)   00100000  FULLRUN
//FT06F001 DD SYSOUT=*,DCB=(RECFM=FBA,LRECL=137,BLKSIZE=6850)         00110000  FULLRUN
//FT08F001 DD DSN=&&DATA,DISP=(NEW,PASS),UNIT=WK10,                   00120000  FULLRUN
//         SPACE=(TRK,(10,10),RLSE),                                  00130000  FULLRUN
//         DCB=(RECFM=FB,LRECL=80,BLKSIZE=3120)                       00140000  FULLRUN
//FT10F001 DD DSN=&&ESOPSOC,DISP=(NEW,PASS),UNIT=WK10,                00150000  FULLRUN
//         SPACE=(TRK,(10,10),RLSE),                                  00160000  FULLRUN
//         DCB=(RECFM=FB,LRECL=80,BLKSIZE=3120)                       00170000  FULLRUN
//*                                                                   00180000  FULLRUN
//*        ******************************************                 00190000  FULLRUN
//*        ********    TRANSLATER ESOPE RUN    ********               00200000  FULLRUN
//*        ******************************************                 00210000  FULLRUN
//*                                                                   00220000  FULLRUN
//ESOPE   EXEC PGM=ESOPE,PARM='FORT=IBM,FORT77,CHAR=COMPLET'          00230000  FULLRUN
//STEPLIB   DD DSN=J9303.TRANS.LOAD,DISP=SHR                          00240000  FULLRUN
//FT05F001  DD DSN=&&ESOPSOC,DISP=(OLD,DELETE)                        00250000  FULLRUN
//FT06F001  DD SYSOUT=*,DCB=(RECFM=FBA,LRECL=137,BLKSIZE=6850)        00260000  FULLRUN
//INCLIB    DD DSN=J9303.P011.FORT77,DISP=SHR                         00270000  FULLRUN
//FT01F001  DD DSN=&&FORTSOC,DISP=(NEW,PASS),                         00280000  FULLRUN
//          UNIT=WK10,SPACE=(TRK,(10,10),RLSE),                       00290000  FULLRUN
//          DCB=(RECFM=FB,LRECL=80,BLKSIZE=3120)                      00300000  FULLRUN
//*                                                                   00310000  FULLRUN
//*        ***************************************                    00320000  FULLRUN
//*        ********    OUTFILE DELETE    ********                     00330000  FULLRUN
//*        ***************************************                    00340000  FULLRUN
//*                                                                   00350000  FULLRUN
//DEL1    EXEC SCRATCH,DSN='J9303.@CATFT14.DATA'                      00360000  FULLRUN
//DEL2    EXEC SCRATCH,DSN='J9303.@CATFT55.DATA'                      00370000  FULLRUN
//DEL3    EXEC SCRATCH,DSN='J9303.@CATFT11.DATA'                      00380000  FULLRUN
//*                                                                   00390000  FULLRUN
//*        ********************************************               00400000  FULLRUN
//*        ********    CATHARE COMPILE & LINK    ********             00410000  FULLRUN
//*        ********************************************               00420000  FULLRUN
//*                                                                   00430000  FULLRUN
//FORT    EXEC FORT77,A='ALC,NOS,LC(0)',OPT=3                         00440000  FULLRUN
//SYSIN     DD DSN=&&FORTSOC,DISP=(OLD,DELETE)                        00450000  FULLRUN
//*                                                                   00460000  FULLRUN
//LINK    EXEC LKED77                                                 00470000  FULLRUN
//SYSLIB    DD DSN=J9303.JAERISYS.LOAD,DISP=SHR                       00480000  FULLRUN
//          DD DSN=J9303.JAERIMOD.LOAD,DISP=SHR                       00490000  FULLRUN
//          DD DSN=J9303.JAERIGRI.LOAD,DISP=SHR                       00500000  FULLRUN
//          DD DSN=J9303.JAERIGEM.LOAD,DISP=SHR                       00510000  FULLRUN
//          DD DSN=J9303.LINPACK.LOAD,DISP=SHR                        00520000  FULLRUN
//          DD DSN=SYS9.JSSL.LOAD,DISP=SHR                            00540000  FULLRUN
//          DD DSN=SYS2.FORTLIB,DISP=SHR                              00550000  FULLRUN
//*                                                                   00560000  FULLRUN
//*        **********************************                         00570000  FULLRUN
//*        ********    CATHARE RUN    ********                        00580000  FULLRUN
//*        **********************************                         00590000  FULLRUN
//*                                                                   00600000  FULLRUN
//RUN     EXEC GO                                                     00610000  FULLRUN
//FT06F001 DD SYSOUT=*,                                               00620000  FULLRUN
//            DCB=(BLKSIZE=6850,LRECL=137,RECFM=FBA)                  00630000  FULLRUN
//FT08F001 DD DSN=&&DATA,DISP=(OLD,PASS)                              00640000  FULLRUN
//FT14F001 DD DSN=J9303.@CATFT14.DATA,DISP=(NEW,CATLG,DELETE),        00650000  FULLRUN
//         UNIT=TSSWK,SPACE=(TRK,(50,50),RLSE)                        00660000  FULLRUN
//FT55F001 DD DSN=J9303.@CATFT55.DATA,DISP=(NEW,CATLG,DELETE),        00670000  FULLRUN
//         UNIT=TSSWK,SPACE=(TRK,(50,50),RLSE)                        00680000  FULLRUN
//FT11F001 DD DSN=J9303.@CATFT11.DATA,DISP=(NEW,CATLG,DELETE),        00690000  FULLRUN
//         UNIT=TSSWK,SPACE=(TRK,(50,50),RLSE)                        00700000  FULLRUN
//                                                                    00710000  FULLRUN
```

Fig. 3.1 JCL for CATHARE code run

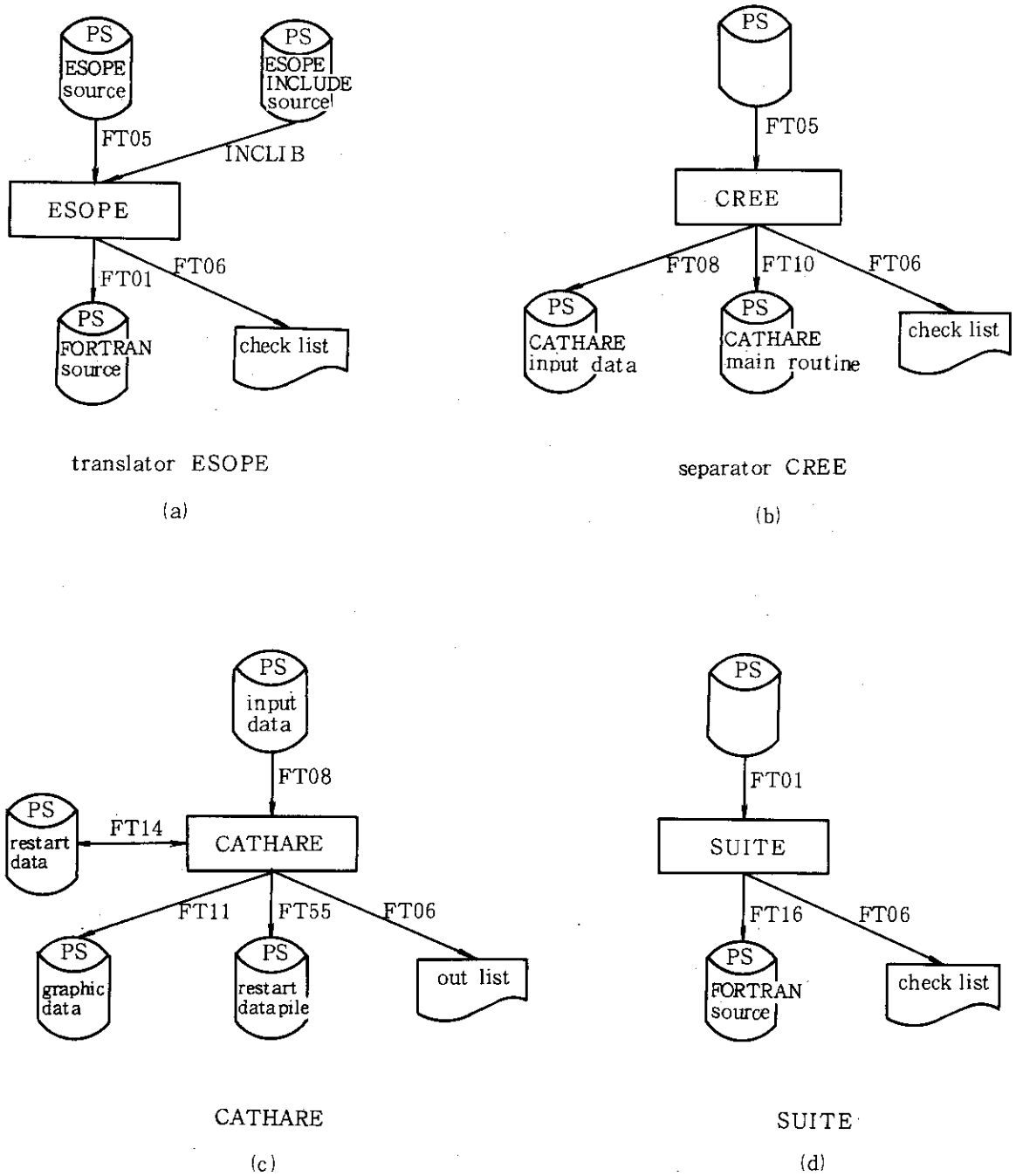

Fig. 3.2 How to use programs

4. How to Use Graphic Systems

4.1 Classical Graphics

4.1.1 Flow of the Procedure

The classical graphics on TEK4014 and TEK4115 can proceed on the program flow given by Fig. 4.1 as follows :

(1) Obtain the graphic output on FT11 from CATHARE code calculation.

(2) Enter the command TRACE for LGI generation. Here input data is given to FT05 which specifies the graphs to be drawn. The CATHARE graphic data is on FT11 and the LGI is generated on FT13. Examples of the input specification will be shown later.

(3) Enter the command TEK4014 for the graphics on TEK4014 terminal or enter the command TEK4115 for TEK4115 terminal. Here FT05 is used for the input from the terminals. At the beginning, it asks a question :

'ENTREZ LE NUMERO DU PREMIER GRAPHIQUE'
'ET LE NOMBRE DE GRAPHIQUE A TRACER'

Then user must reply the first number of graph and the number of graphs to be plotted. Since free format input is used, if you wish to plot from the third graph to the eighth graph, enter

3 5

After then the graphic plot begins.

The usage of commands TRACE, TEK4014 and TEK4115 are as follows :

(1) TRACE

```
TRACE Member name |IN(File name3)| |OUT(File name2)|
                  |SYSIN(File name3| |LM(Load module name)|
                  |PNM(Program name)|
```

where |.....| is optional.

Member name ;	member name of input data for graphics
File name1 ;	name of the CATHARE graphic file, the default is CATFT11·DATA
File name2 ;	LGI file name, the default is CATLGI·DATA
File name3 ;	name of input data file for graphics
Load module name ;	file name of load module : TRACE·LOAD
Program name ;	member name of load module : TRACE

(2) TEK4014, TEK4115

TEK4014 |IN(File name)| |LM(Load module name)|
|PNM(Program name)|

File name ; name of input data file for graphics

Load module name ; file name of load module : TEK4014•LOAD

Program name ; member name of load module : TEK4014 or TEK4115

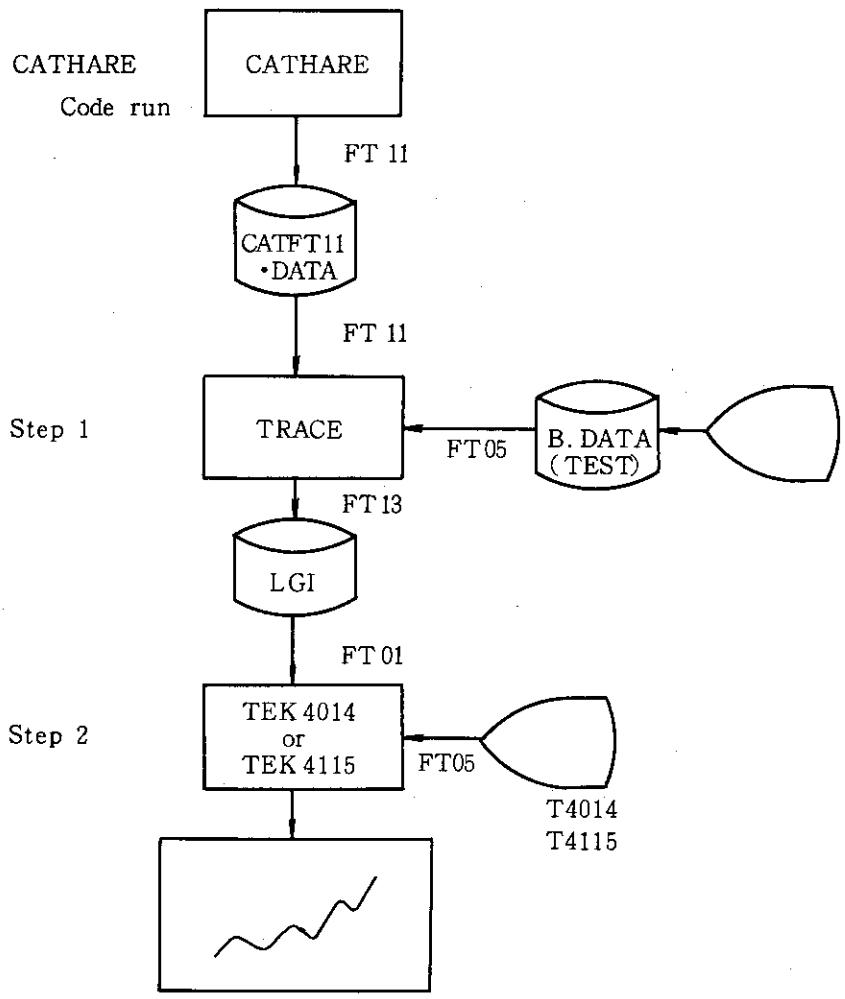

Fig. 4.1 How to use classical graphics

4.1.2 Input Data Specification

Examples of input data for classical graphics are shown in Fig. 4.2. The output graphs are given by Figs. 4.3 to 4.10. Here the computational results of a sample problem TCS6P are pictured. The TCS6P calculates the break of 6 pouces (1 pouce = 0.027 m). As seen in Fig. 4.2, the method for input specification is very simple, and then the user can easily make it by referring to the examples. There are another examples in the file B·DATA. With respect to the names of variables to be plotted, see the Table 4.0.

```
FILE = J9143.CATAG.DATA                    DATE  1986/03/25(TUESDAY)     TIME 17:01:11  PAGE 0009  *VIVAPO*

     **************
     ** TCS6P    **
     **************

                    8                                                                    TCS6P
                    CHRONO DT GRILLE 'TIME STEP CATHARE TCS6P'                           TCS6P
                    CADRAGE TEMPS 0. 400. 1 COURBES  XJONCTX MOYSUP                      TCS6P
                    CHRONO P GRILLE 'PRESSU PRESSURE CATHARE TCS6P'                      TCS6P
                    CADRAGE TEMPS 0. 400. VARIABLE 0. 160.E5  1 COURBES PRESSU 2         TCS6P
                    CHRONO NIVEAU GRILLE 'PLENSUP LEVEL CATHARE TCS6P'                   TCS6P
                    CADRAGE TEMPS 0. 400. VARIABLE 0. 5. 1 COURBES PLENSUP 0             TCS6P
                    CHRONO NIVEAU GRILLE 'COUVE LEVEL CATHARE TCS6P'                     TCS6P
                    CADRAGE TEMPS 0. 400. VARIABLE 0. 5. 1 COURBES COUVE 0               TCS6P
                    CHRONO TGE GRILLE 'ROD TEMPERATURE CATHARE TCS6P'                    TCS6P
                    CADRAGE AUTO 3 COURBES COEURMOY 1.22                                 TCS6P
                    COEURMOY 2.27 COEURMOY 2.9                                           TCS6P
                    CHRONO ALFA GRILLE 'CORE VOID CATHARE TCS6P'                         TCS6P
                    CADRAGE AUTO 3 COURBES COEURMOY 1.22                                 TCS6P
                    COEURMOY 2.27 COEURMOY 2.9                                           TCS6P
                    CHRONO DEBBRE GRILLE 'BREAK FLOW CATHARE TCS6P'                      TCS6P
                    CADRAGE AUTO  1 COURBES FROIDER -1                                   TCS6P
                    CHRONO DEBACCU GRILLE 'ACCU FLOW CATHARE TCS6P'                      TCS6P
                    CADRAGE AUTO 1 COURBES FROIDEI 1.                                    TCS6P
```

Fig. 4.2 Input data for classical graphics

Table 4.0 Variable names to be plotted in the classical graphics (1)

	Nom	Signification	CHRONOLOGIES						PHOTO PERSP
			XJONCIX	Te	VOLUME	AXIAL	BRANCHE	GVSAXIAL	AXIAL
1	P	pression	J	G	v	S	G	S	x
2	HL	enthalpie liquide	J	G	v	S	G	S	x
3	HV	enthalpie vapeur	J	G	v	S	G	S	x
4	ALFA	taux de vide	J	G	v	S	G	S	x
76	UMALF	taux de plein (1-ALFA) (*)	J	G	v	S	G		x
5	TL	température liquide } appel aux (*)	J	G	v	S	G		x
6	TV	température vapeur } fonctions (*)	J	G	v	S	G		x
7	TSAT	température de saturation } de l'eau (*)	J	G	v	S	G		x
8	VL	Vitesse liquide	J			V			x
9	VV	vitesse vapeur	J			V			x
10	GLISS	glissement (VL/VV)	J			V			x
11	QL	débit liquide	J			V			x
12	QV	débit vapeur	J			V			x
13	QT	débit total (QL + QV) (*)	J			V			x
14	ITOVI	indice de zone frottement interfacial				V			x
15	IQL	indice de zone échange liquide-interface				P			x
16	IQV	indice de zone échange vapeur-interface				P			x
17	MASINJ	masse totale injectée	G						
18	ML	masse liquide		G	G	G	G		
19	MV	masse vapeur		G	G	G	G		
20	MT	masse totale (ML + MV)	G	(*) G	v + G (*)	(*) G	G (*)		
21	MG	masse gagnée (MT - MASINJ - MASINI) (*)	G						
22	MGSMI	- MG en % de la masse initiale (*)	G						
23	MGSMA	- MG en % de la masse actuelle (*)	G						
		PAROIS							
24	TMOUILL	température de paroi mouillée			v	P			x
25	TSECHE	température de paroi sèche			v	P			x
26	IECH	indice de zone de flux d'échange paroi				P			x
27	PHIL	flux total liquide				P			x
28	PHIV	flux total vapeur				P			x
29	PRECUE	puissance totale reçue des parois	(*) G		G	G			
30	PPAROI	puissance reçue par paroi multicouche	G						

(Cited from CATHARE manual Appendix C-(1))

Table 4.0 (2)

	Nom	signification	CHRONOLOGIES						PHOTO PERSP
			XJONCTX	Te	VOLUME	AXIAL	BRANCHE	GVSAXIAL	AXIAL
		COMBUSTIBLE							
31	TUO2EXT	température extérieure de l'UO2				P			x
32	TMG	moyenne de gaine				P			x
33	TGI	de gaine interne				P			x
34	TGE	de gaine externe				P			x
35	EJEU	épaisseur du jeu				P			x
36	EOI	d'oxyde interne				P			x
37	EGAINE	de gaine				P			x
38	EOE	d'oxyde externe				P			x
39	RM	rayon moyen de gaine				P			x
40	REXT	rayon extérieur de la pastille				P			x
41	PJEU	pression dans le jeu				G			
42	QGENER	puissance générée dans le combustible	G			G			
43	PCOMBU	puissance reçue par le fluide par paroi combu	G						
		GV							
44	MEAU	masse d'eau du secondaire GV				G			
45	MVAP	masse de vapeur du secondaire GV				G			
46	PRESSGV	pression du secondaire GV				G			
47	PSECGV	puissance reçue par le secondaire GV	G			G(par tube)		G	
48	PUISGV	puissance reçue par le fluide par paroi GV	G						
		POMPE							
49	VITROT	vitesse de rotation réduite				G			
50	DELTAP	deltap pompe (Psortie - Pentrée)				G			
51	DEBRED	débit volumique réduit				G			
52	COUPLE	(prévue mais non implémentée) couple hydraulique							
		INJECTION							
53	DEBSOU	débit massique				G			
54	ENESOU	puissance enthalpique injectée				G			
55	HINJ	enthalpie d'injection				(M) G			
56	TINJ	température d'injection				(M) G			
		ACCUMULATEUR							
57	DEBACCU	débit massique				G			
58	QHINJACU	puissance enthalpique injectée				G			

Table 4.0 (3)

	Nom	Signification	CHRONOLOGIES						PHOTO PERSP
			XJONCTX	Te	VOLUME	AXIAL	BRANCHE	GVSAXIAL	AXIAL
59	HINJACCU	enthalpie d'injection				(*) G			
60	TINJACCU	température d'injection				(*) G			
61	PACCU	pression accumulateur				G			
62	HACCU	enthalpie accumulateur				G			
63	TACCU	température accumulateur				(*) G			
64	VGAZ	volume de gaz				G			
65	MEAUACCU	masse d'eau				G			
66	VEAUACCU	masse d'eau disponible				(*) G			
		BRECHE							
106	DEBBRE	Débit massique à la brèche (terme B.)				G			
107	ENEBRE	Débit enthalpique à la brèche				G			
		PUITS							
108	DEBPUI	Débit massique d'un puits				G			
109	ENEPUI	Débit enthalpique d'un puits				G			
		JONCTION							
67	DT	pas de temps	G						
		VOLUME							
68	NIVEAU	cote de séparation entre les 2 sous volumes			G			G	
73	FTRA1		J	G	GV	V	G	V	x
74	FTRA2	fonctions utilisateur (*)	J	G	GV	V	G	V	x
75	FTRA3		J	G	GV	V	G	V	x
110	USER	variable "graphique" utilisateur	J						

	Nom	RENOYAGE - PSCHIT signification	CHRONO PSCHIT	PHOTO PSCHIT
69	VFT	vitesse front de trempe	x	
70	ZFT	cote front de trempe	x	
71	TBOFT	température de paroi mouillée au front de trempe	x	
72	TAXFT	température de paroi mouillée sur la zone PSCHIT	x	x

Table 4.0 (4)

		Signification	CHRONOLOGIE
	NOM	GV Secondaire axial	GVSAXIAL
82	H	enthalpie	S
83	XX	titre thermodynamique	S
84	RO	densité	S
85	QQ	débit	V
86	V	vitesse	V
87	PHIC	flux côté secondaire Branche chaude	S
88	PHIF	flux côté secondaire Branche froide	S
89	TC	température de paroi branche chaude	S
90	TF	température de paroi branche froide	S
91	QEVAP	débit d'évaporation	G
92	QCOND	débit de condensation	G
93	QDOWN (*)	débit downcomer	G
94	QSEPAR (*)	débit au séparateur	G
95	QHCAV (*)	débit tuyauterie vapeur	G
96	MINF	masse du sous volume inférieur	G
97	MSUP	masse du sous volume supérieur	G
98	VVOL	volume Ω^- de la cavité	G
99	VSUP	volume Ω^+	G
100	TAU	taux de recirculation	G
101	QALIM	débit d'eau alimentaire	G
102	QSOUEX	somme des débits des termes sources explicites	G
103	QPUIEX	somme des débits des termes puits explicites	G
104	QPUIMP	somme des débits des termes puits implicites	G
105	QSOUPA	débit aux soupapes	G

Table 4.0 (5)

RECAPITULATIF : CONSTITUTION D'UN BLOC DE DONNEES POUR TRACER DES COURBES

Représente un choix, la parenthèse une répétition, le crochet un mot facultatif

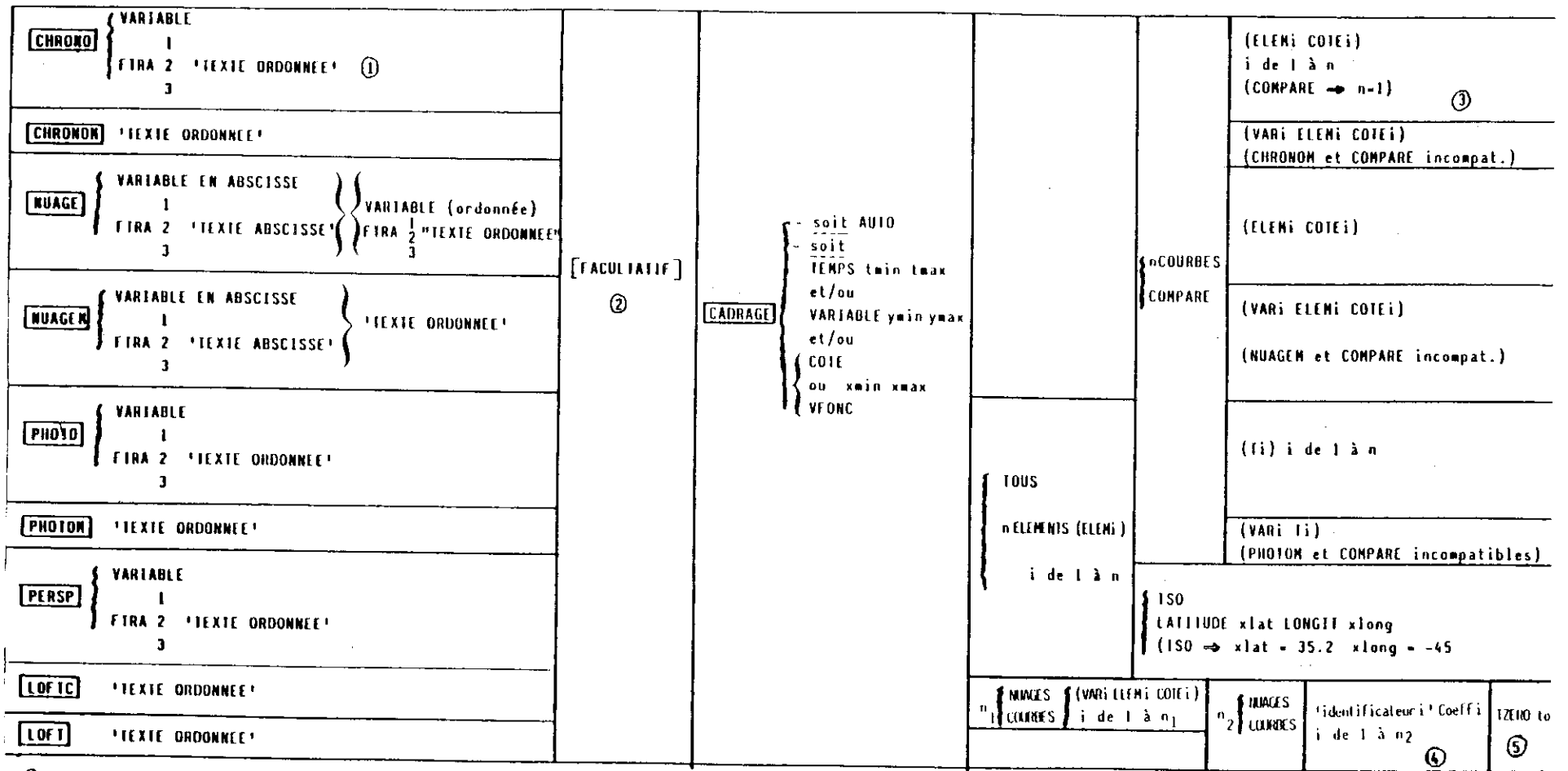

① 20 caractères maxi

② [ANGLAIS] [GRILLE] [LOGARI] ['TITRE GENERAL'] l'ordre entre crochets est indifférent, le titre général est limité à 35 caractères

③ Pour les variables globales COTEi est sans signification mais doit être présent

④ COEFFi est le coefficient multiplicateur d'unités. Pour les températures coeff=1 : °C → °C | coeff=2 : °F → °C | coeff=3 : K → °C

⑤ to temps LOFT correspondant au zéro-CATHARE (peut-être interprété comme décalage LOFT-CATHARE)

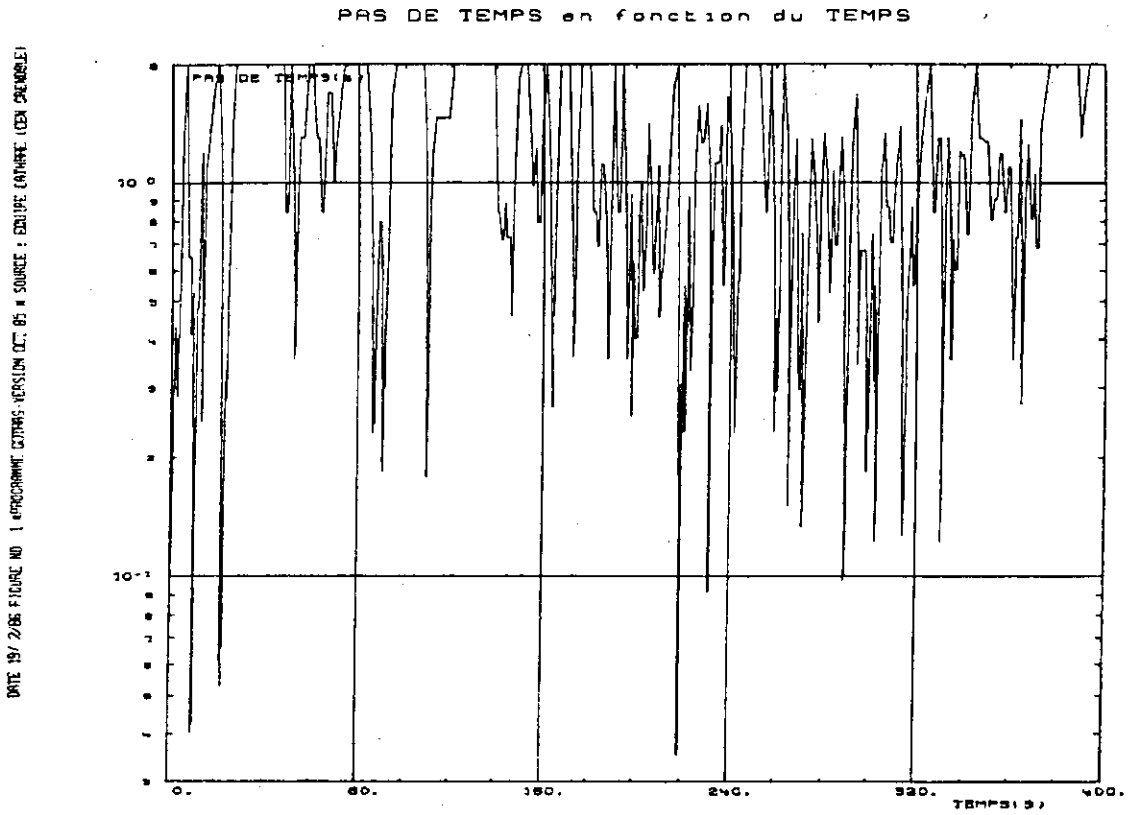

Fig. 4.3 Time step CATHARE TCS6P

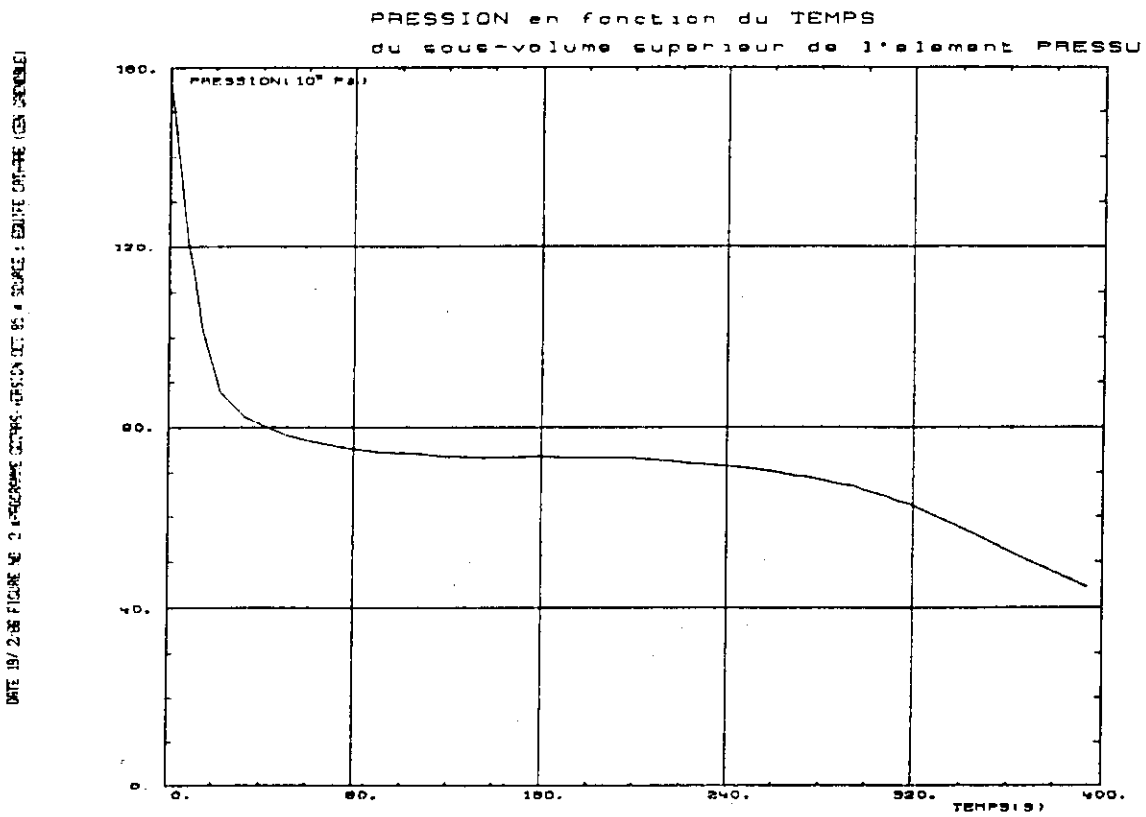

Fig. 4.4 PRESSU pressure CATHARE TCS6P

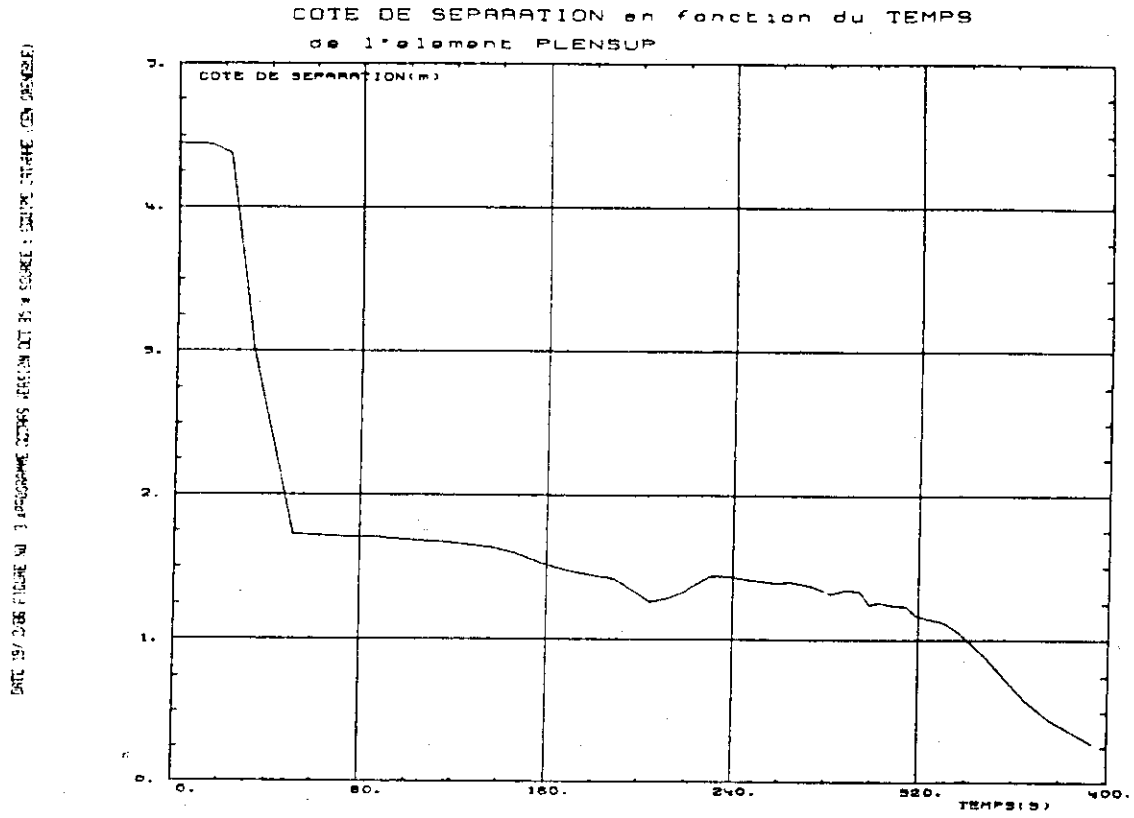

Fig. 4.5 PLENSUP level CATHARE TCS6P

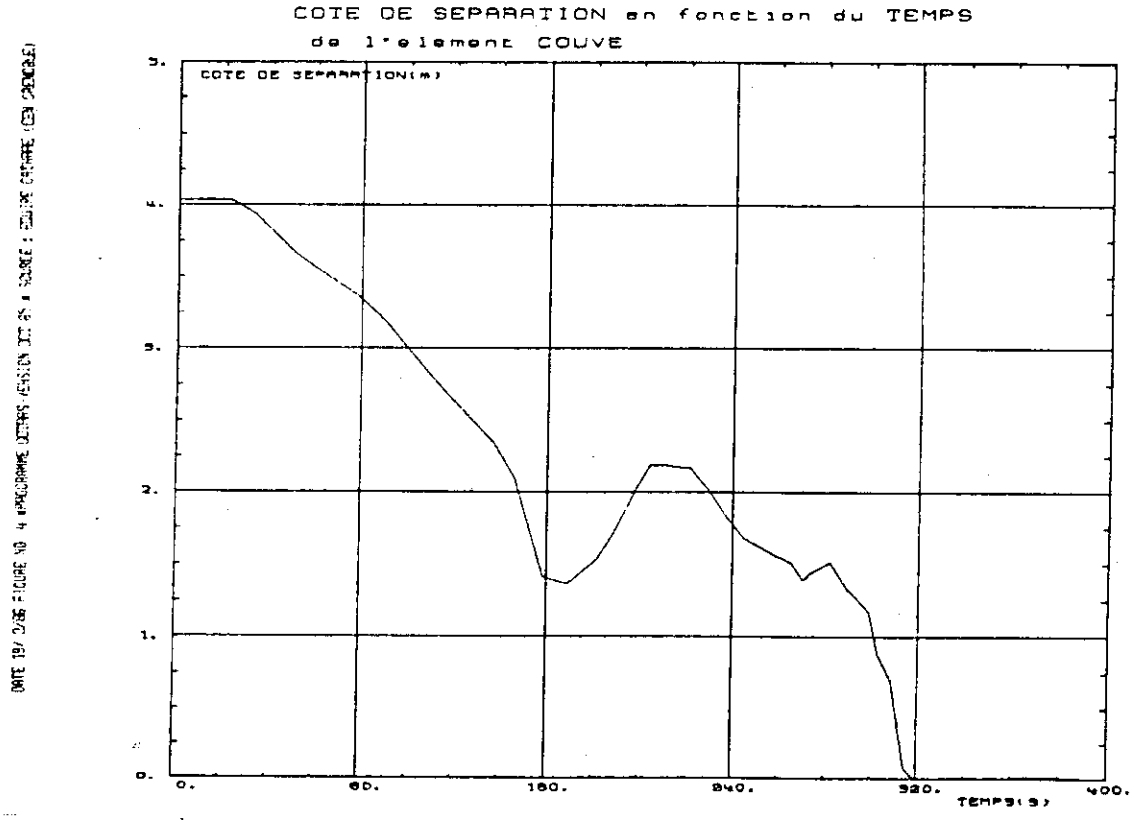

Fig. 4.6 COUVE level CATHARE TCS6P

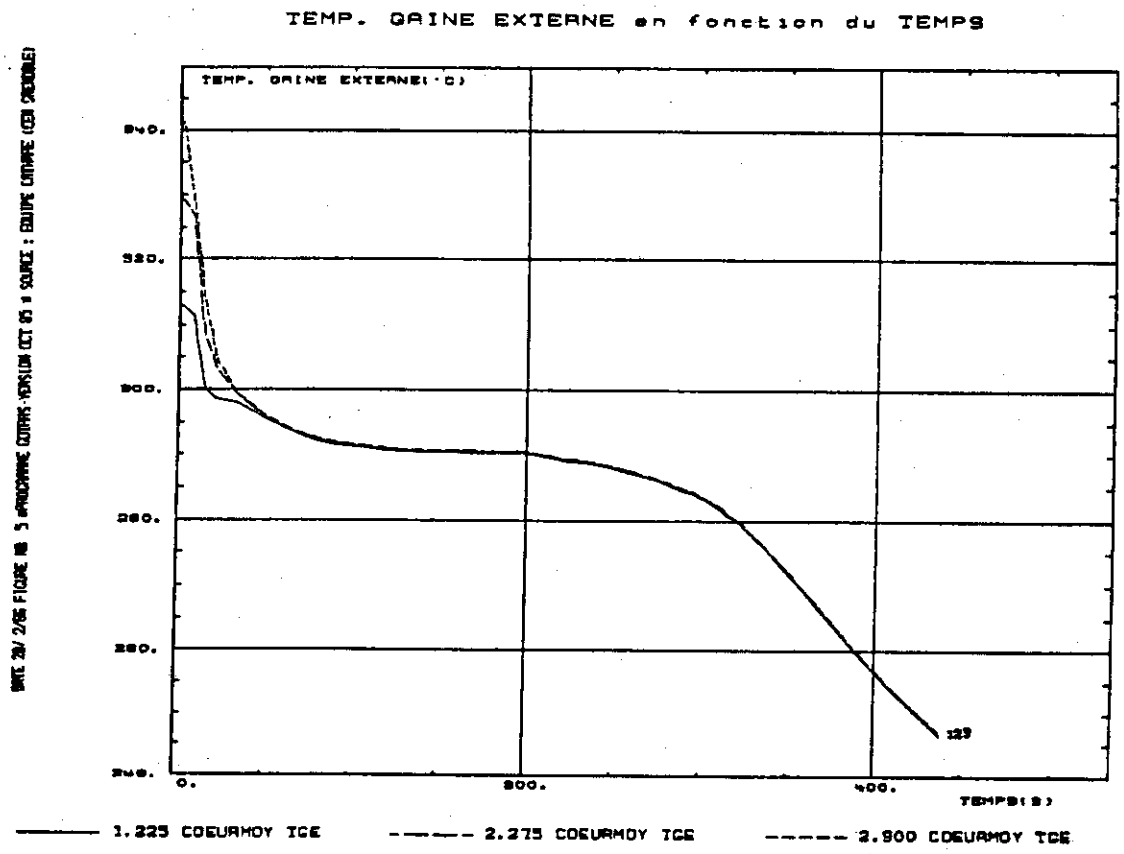

Fig. 4.7 Rod temperature CATHARE TCS6P

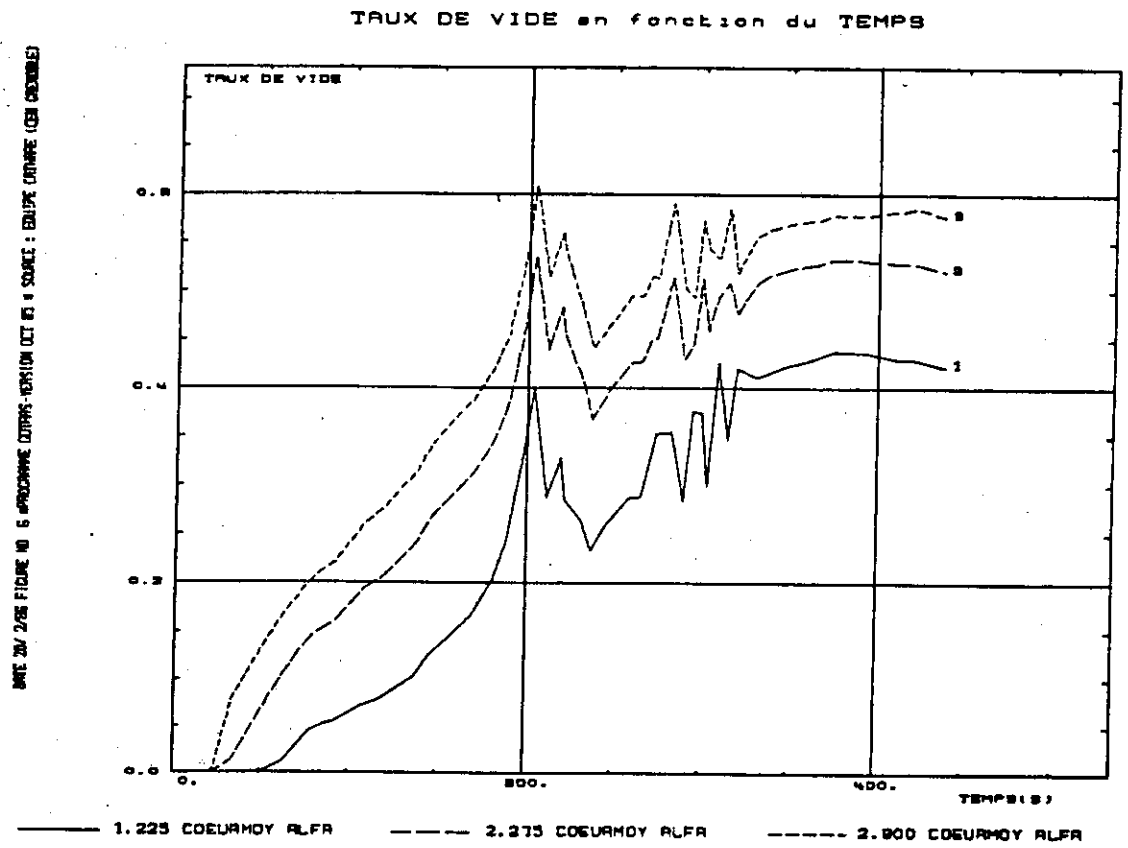

Fig. 4.8 Core void CATHARE TCS6P

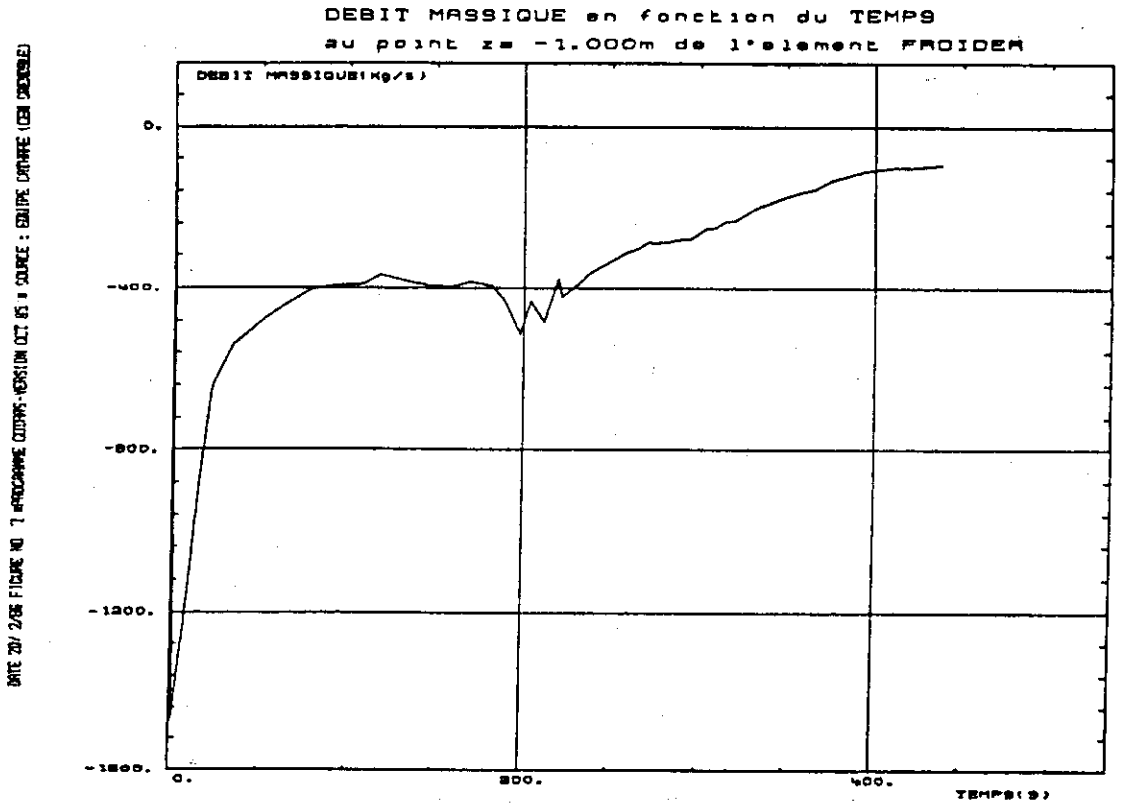

Fig. 4.9 Break flow CATHARE TCS6P

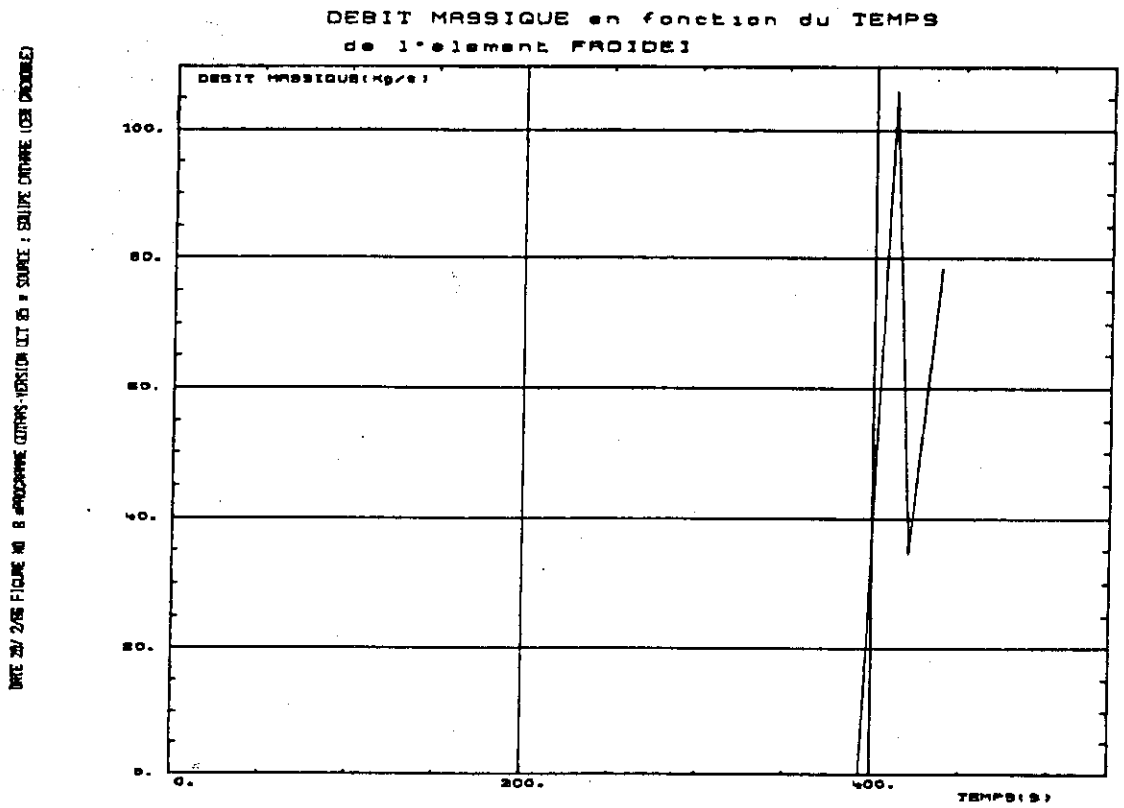

Fig. 4.10 ACCU flow CATHARE TCS6P

4.1.3 Graphics on Laser Printer

The classical graphics on a laser printer (NLP of FUJITSU) can be available by using the procedure shown in Fig. 4.10A. The graphs can be directly obtainable without LGI generation. The JCL of the NLP output is shown in Fig. 4.10B(c). Here the same input data specification as before is assumed and all the graphs specified in a member of a file are drawn.

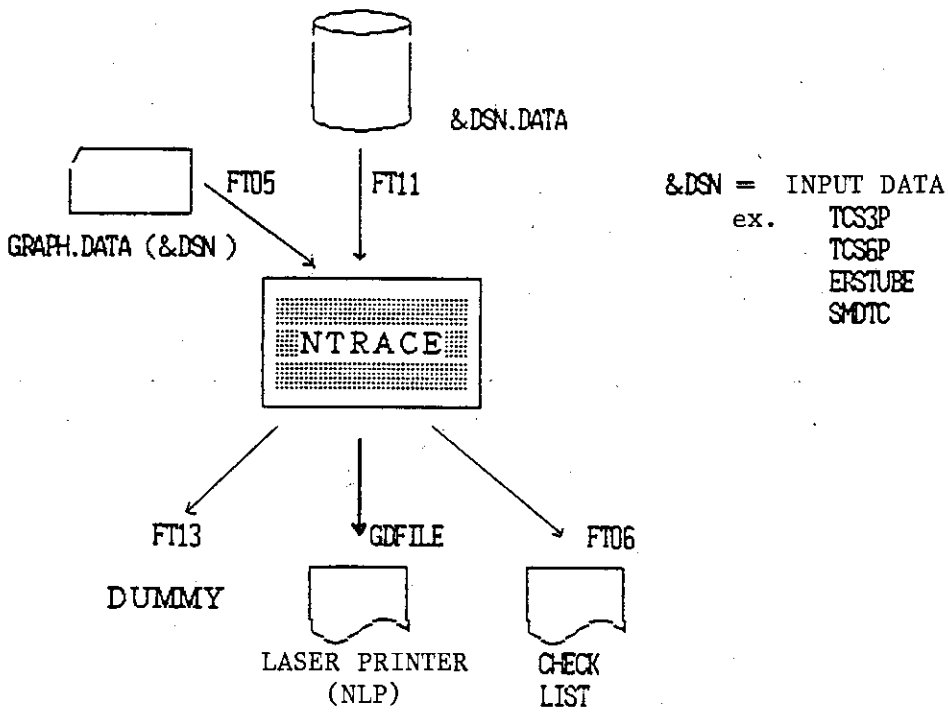

Fig. 4.10A Laser printer output in JAERI

(a) Creation of JAERI TRACE library

```
//*
//*        ***********************************************
//*        ********    MAKE A NEW TATB LIB.      ********
//*        ***********************************************
//*
//FORT     EXEC FORT77,A='NAME,ISN(D),ALC,NOS,LC(0)',OPT=3,
//         B='ELM(TBXAX1)'
//SYSIN    DD DSN=J9002.CATTATBN.FORT77,DISP=SHR
//*
//LINK     EXEC LKEDCT77,A='LET,NCAL,MAP',REGION=2048K
//SYSLMOD  DD DSN=J9002.CATLIBN.LOAD,DISP=SHR
??
//
```

(b) Creation of JAERI TRACE load module

```
//*
//*        ***********************************************
//*        ********    MAKE    NTRACE            ********
//*        ***********************************************
//*
//FORT     EXEC FORT77,A='ISN(D),ALC,NOS,LC(0)',OPT=3,
//         B='ELM(NTRACE)'
//SYSIN    DD DSN=J9002.CATTRACE.FORT77,DISP=SHR
//*
//LINK     EXEC LKEDCT77,REGION=2048K
//SYSLIB   DD DSN=SYS9.PNL.LOAD,DISP=SHR
//         DD DSN=J9002.CATLIBN.LOAD,DISP=SHR
//         DD DSN=J1648.CATLIB1.LOAD,DISP=SHR
//         DD DSN=SYS9.GGS.LOAD,DISP=SHR
//         DD DSN=SYS2.FORTLIB,DISP=SHR
//SYSLMOD  DD DSN=J9002.NTRACE.LOAD,DISP=SHR
//SYSIN    DD *
 ENTRY NTRACE
 NAME NTRACE(R)
/*
??
//
```

(c) NLP graphic output

```
//*
//*
//*        ***********************************
//*        ********  OUTPUT TO NLP    ********
//*        ***********************************
//*
//NTRACE   PROC GR=
//RUN      EXEC PGM=NTRACE,COND=(4,LT),PARM='FLIB(ERRCUT=0)',
//         REGION=2048K
//STEPLIB  DD DSN=J9002.NTRACE.LOAD,DISP=SHR
//SYSPRINT DD SYSOUT=*,
//         DCB=(RECFM=FBA,LRECL=137,BLKSIZE=19043)
//FT05F001 DD DSN=J9002.GRAPH.DATA(&GR),DISP=SHR
//FT06F001 DD SYSOUT=H
//FT11F001 DD DSN=J9002.&GR..DATA,DISP=SHR
//FT13F001 DD DUMMY
//GDFILE   DD SYSOUT=H
//        PEND NTRACE
//*
//NLP1  EXEC NTRACE,GR=TCS6P
//*
??
//
```

Fig. 4.10B JCL for laser printer output

4.2 Colour Graphics DESSIN on TEK4115

4.2.1 Flow of the Procedure

The colour graphics on TEK4115 is processed as follows (Fig. 4.11) :

(1) Obtain the graphic output on FT11 from CATHARE code calculation.

(2) Enter the command EXTRACT for TOPO generation. The example is shown in Fig. 4.12. Here three questions are given to user. They are replied as follows, where 00000? is a prompt message :

1) Enter the name of the original graphic file (from FT11 of CATHARE code run). It must be described in full name

'JXXXX·AAAAAA·BBBB'

2) Enter the name of the TOPO file,

3) Enter COPIE if TOPO generation, SAUT if skip, or FIN if end. Here, FT10 is used for the graphic data from CATHARE code and FT09 is output for TOPO data.

(3) Enter the command DESSIN for the colour graphics on TEK4115 terminal.

The commands EXTRACT and DESSIN have no parameters.

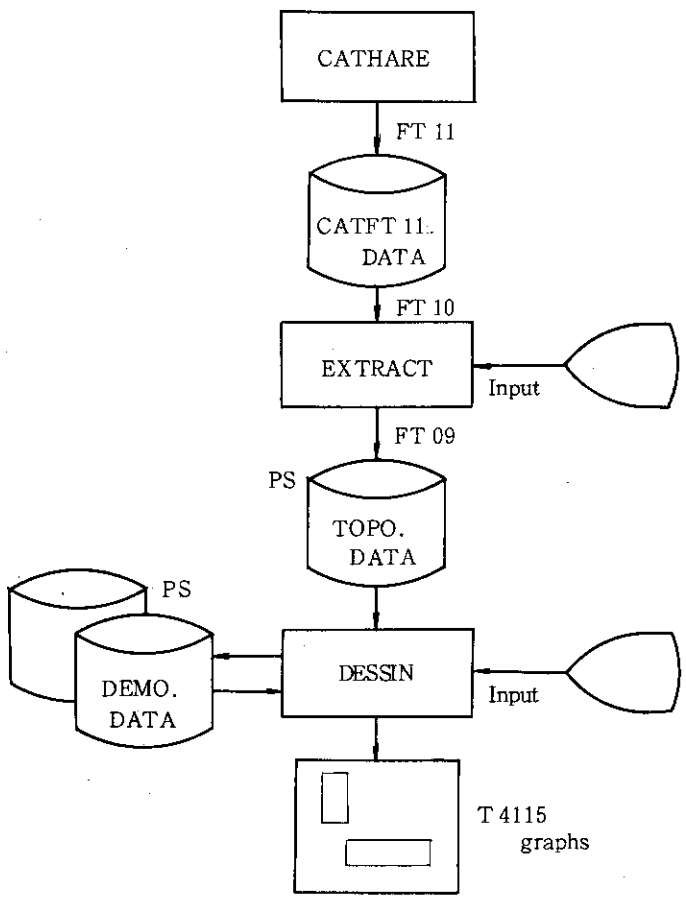

Fig. 4.11 How to use colour graphics

```
 |
 READY
ALLOC DA(TOP001.DATA) NEW SPACE(2 1) T
 READY
.EXTRACT
 ===== CONTRACTION DE FICHIER GRAPHIQUE CATHARE =====
 NOM DU FICHIER GRAPHIQUE D'ORIGINE ?
 00000 ?
'J1648.CATFT11.DATA'
 ITYP=    00000004
 NOM DU FICHIER GRAPHIQUE COMPRESSE ?
 00000 ?
'J1648.TOP001.DATA'
 COPIE ,SAUT OU FIN ?
 00000 ?
COPIE
 COPIE JUSQU'A ?
 00000 ?
1
 INTERVALLE DE TEMPS ENTRE ENREGISTREMENTS ?
 00000 ?
0.25
 FIN DU FICHIER GRAPHIQUE. DERNIER TEMPS LU :  0.68984932E+00
 ***
     191 BLOCS LUS     1981 CARTES ECRITES
 ===== FIN DE VISUALISATION =====
 READY
```

Fig. 4.12 Command flow of EXTRACT

4.2.2 Example of Colour Graphics

DESSIN asks the questions which are necessary for their execution. The DESSIN has many commands for colour graphics. The commands for TEK4115 are given by Table 4.1(a) in French. The English translation is shown in 4.1(b), where the translation was made by Mr. C. Chauliac of CEA resident at JAERI.

The example of the command flow of colour graphics is given by Fig. 4.13. The obtained graph is shown in Fig. 4.14. It draws the void fraction distribution within a pipe (CANAL in French) using the results of a sample problem CANONGB. The command flow in Fig. 4.13 is as follows :

(1) Enter the command DESSIN to start the drawing.

(2) Enter the command CREE to create one graphic component and to give its descriptions, where the geographical data of the frame (TUYAU in French) are specified. The actual size of frame to be drawn is also given by Fig. 4.14.

(3) Enter the command ECRI to save the descriptions given above to an internal file, where the file name must be specified in full name. In this example, 'J1648·DEMO·DATA' is used.

(4) Enter the command GRAPHE for enter or change the information for the drawing. In this example, both the information about graphics and 'Palette' are specified.

In the former stage, the name of TOPO file, and the kind of physical variables to be drawn (in this case ALFA; void fraction) are specified, while the information on other variables can be skipped by pushing Enter or Return key.

In the latter stage, the colours on Palette are changed in order to well discriminate the void fraction levels (this stage is not always necessary). For this purpose, firstly each void fraction level is specified. And then the colour number is specified in the order of level. The correspondence between number and colour is not clear at present.

(5) Enter the command ECRI to save the information on the drawing and the Palette in the internal file.

(6) Enter the command LTRE to restore the information in the internal file.

(7) Enter the command CATM for the drawing. And to the question

TEMPS DE LA VISUALISATION?

reply the time to be drawn. The time can be repeatedly entered.

Here the steps (1) - (5) can be performed not using TEK4115.

It should be noted with respect to the DESSIN commands (Table 4.1) that

(1) It is enough to type the four first characters of the command.

(2) In some case (*) the name of the file or of the component may be typed after the commands.

(3) Command MASQUE has no parameter. It makes reverse of graphs.

(4) The detail descriptions for the usage of colour graphics are given in the manual (Appendix C-(2)).

```
 READY
DESSIN
 CE N'EST PAS UN TEKTRONIX 41XX
 LE TERMINAL GRAPHIQUE N'EST PAS DEFINI
 TABLES REMISES A ZERO
 ORDRE ?
 00000 ?
CREE
 QUE VOULEZ VOUS CREER ? -> TUYAU DROIT 'TD' , TUYAU EN U  'TU' ,  COUDE  'C' ,
 BRANCHE EN T 'TE'  , VOLUME 'V'
 ->
 00000 ?
TD
 CREATION D'UN TUYAU DROIT
 NOMMEZ L'OBJET CREE ?
 ->
 00000 ?
CANAL
 LONGUEUR ET SECTION D'ENTREE DU TUYAU
 ->
 00000 ?
4.391 1.
 SECTION DE SORTIE DU TUYAU
 ->
 ***
 00000 ?
1.0
 HORIZONTAL OU VERTICAL  ?   ->   H  ,  V
 ->
 00000 ?
H
 SENS CROISSANT OU DECROISSANT  ?   ->   C  ,  D
 ->
 00000 ?
C
 NOM DE LA PREMIERE LIAISON ?
 ->
 00000 ?
ENTRE
 NOM DE LA DEUXIEME LIAISON ?
 ->
 00000 ?
BRECHE
 INDIQUEZ LES COORDONNEES DE L'INDICATEUR DE POMPE  SI IL EXISTE
  ->    ->
 00000 ?
 QUE VOULEZ VOUS CREER ? -> TUYAU DROIT 'TD' , TUYAU EN U  'TU' ,  COUDE  'C' ,
 ***
  BRANCHE EN T 'TE'  , VOLUME 'V'
 ->
 00000 ?
 ORDRE ?
 00000 ?
ECRI
 DONNEZ LE NOM DU FICHIER A ECRIRE ->
 00000 ?
'J1648.DEMO.DATA'
 VOUS VOULEZ BIEN ECRASER J1648.DEMO.DATA
 -> OUI / NON ?
 00000 ?
OUI
  DONNEES SAUVEGARDEES SUR LE FICHIER J1648.DEMO.DATA
                  1  OBJETS
                  5  POINTS
                  2  PATTES
                  2  FLECHES
                  0  LIAISONS
 ORDRE ?
 00000 ?
```

Fig. 4.13(a) Command flow of DESSIN (Not necessarily on TEK4115) (1)

```
GRAPHE
 ***
 LISTE DES INFORMATIONS GRAPHIQUES ? ->  OUI / NON
 00000 ?
OUI
 FICHIER DE RESULTATS :
 TITRE DE    0.0   SUR   0.0
  EN (   0.0   ,   0.0   )
 PRESSION LUE EN
 PALETTE DE    0.0   SUR   0.0
  EN (   0.0   ,   0.0   )
 CARTOUCHE BASE SUR
 CARTOUCHE DE    0.0   SUR   0.0
  EN (   0.0   ,   0.0   )
 COULEURS DE :  T SAT            0
               T VAPEUR          0
               T PAROI           0
 DONNEZ LE NOM DU FICHIER DE RESULTATS CATHARE  ->
 00000 ?
'J1648.TOPO.DATA'
 INFORMATIONS SUR LE TITRE ?  ->  OUI / NON
 00000 ?
NON
 ***
 INFORMATIONS SUR LA PALETTE ?  ->  OUI /NON
 00000 ?
OUI
 ABSCISSE DU COTE GAUCHE DE LA PALETTE ?  OU "C" POUR POINTER LE COIN INFERIEUR
GAUCHE
 00000 ?
0.
 ORDONNEE DU COTE INFERIEUR DE LA PALETTE ?  ->
 00000 ?
2.
 LONGUEUR (EN X) DE LA PALETTE ?  OU "C" POUR POINTER LE COIN SUPERIEUR DROIT
 00000 ?
1.
 HAUTEUR (EN Y) DE LA PALETTE ?  ->
 00000 ?
2.
 INFORMATIONS SUR LA VARIABLE PRESSION ?  -> OUI /NON
 00000 ?
 INFORMATIONS SUR LA VARIABLE TL-TSAT  ?  -> OUI /NON
 00000 ?
 INFORMATIONS SUR LA VARIABLE HL       ?  -> OUI /NON
 ***
 00000 ?
 INFORMATIONS SUR LA VARIABLE HV       ?  -> OUI /NON
 00000 ?
 INFORMATIONS SUR LA VARIABLE ALFA     ?  -> OUI /NON
 00000 ?
OUI
 ENTREZ LES VALEURS DE LA VARIABLE EN ORDRE CROISSANT
         1 ->
 00000 ?
0.
         2 ->
 00000 ?
.2
         3 ->
 00000 ?
.4
         4 ->
 00000 ?
.6
         5 ->
 00000 ?
 ***
.8
         6 ->
 00000 ?
1.0
         7 ->
 00000 ?
```

Fig. 4.13(a)-(2)

```
 ENTREZ LA LUMINOSITE ( TEKTRONIX 41XX ) ? ->
            1 ->
 00000 ?
2
            2 ->
 00000 ?
3
            3 ->
 00000 ?
4
            4 ->
 00000 ?
5
            5 ->
 00000 ?
6
 ***
            6 ->
 00000 ?
 INFORMATIONS SUR LA VARIABLE DENSITE  ?  -> OUI /NON
 00000 ?
 INFORMATIONS SUR LE CARTOUCHE ?  ->  OUI /NON
 00000 ?
 ORDRE ?
 00000 ?
ECRI
 DONNEZ LE NOM DU FICHIER A ECRIRE ->
 00000 ?
'J1648.DEMO.DATA'
 VOUS VOULEZ BIEN ECRASER J1648.DEMO.DATA
 -> OUI / NON ?
 00000 ?
OUI
  DONNEES SAUVEGARDEES SUR LE FICHIER J1648.DEMO.DATA
                    1  OBJETS
                    5  POINTS
                    2  PATTES
 ***
                    2  FLECHES
                    0  LIAISONS
 ORDRE ?
 00000 ?
FIN
 ===== FIN DE VISUALISATION =====
 READY
```

Fig. 4.13(a)-(3)

```
 CE N'EST PAS UN TEKTRONIX 41XX
 LE TERMINAL GRAPHIQUE N'EST PAS DEFINI
 TABLES REMISES A ZERO
 ORDRE ?
 00000 ?
LIRE
 DONNEZ LE NOM DU FICHIER A LIRE ->
 00000 ?
'J1648.DEMO.DATA'
 TABLES REMISES A ZERO .
  DONNEES RELUES SUR LE FICHIER J1648.DEMO.DATA
                  1  OBJETS
                  5  POINTS
                  2  PATTES
                  2  FLECHES
                  0  LIAISONS
 ORDRE ?
 00000 ?
CATAM
 LE FICHIER DE RESULTATS CATHARE EST : J1648.TOPO.DATA
 NOM DE LA VARIABLE A REPRESENTER ?
  PRESSION  TL-TSAT   HL        HV        ALFA      DENSITE   ?
 ***
 00000 ?
ALFA
 TEMPS DE LA VISUALISATION ?
 ->
 00000 ?
.3
         0.326
 TEMPS DE LA VISUALISATION ?
 ->
 00000 ?
```

Fig. 4.13(b) Command flow of DESSIN on TEK4115

Table 4.1(a) Questions necessaires a leur executions

```
 CE N'EST PAS UN TEKTRONIX 41XX
 LE TERMINAL GRAPHIQUE N'EST PAS DEFINI
 TABLES REMISES A ZERO
 ORDRE ?
 OOOOO ?
HELP
 LES ORDRES PRINCIPAUX SONT :

 CATA    (*) = VISUALISER LES RESULTATS DE CATHARE  (SANS MAILLAGE)
 CATM    (*) = VISUALISER LES RESULTATS DE CATHARE  (AVEC MAILLAGE)
 CONCATENER = CONCATENER DEUX OBJETS MAILLES
 COPIE   (*) = CREER UN OBJET PAR COPIE D'UN AUTRE
 CREER   (*) = CREER UN OBJET PAR DESCRIPTION
 DEPLACER (*) = DEPLACER UN OBJET
 DEVICE (*) = INDIQUER LE TYPE DU TERMINAL ET/OU DE LA
              BIBLIOTHEQUE GRAPHIQUE
 DUMP       = IMPRIMER LES TABLES
 ECRIRE (*) = ECRIRE UN FICHIER
 EXAMINER  = EXAMINER LES RESUTATS D'UN CALCUL ET AFFICHER LES RESULATS CHO
 FIN        = TERMINER L'EXECUTION DU PROGRAMME
 FLECHE     = MODIFIER LES FLECHES DE VITESSE
 GRAPHE    = ENTRER OU CHANGER LES INFORMATIONS  DU DESSIN
 ***
 HELP       = LISTER LES ORDRES DU PREMIER NIVEAU
 LIER       = CREER, MODIFIER, SUPPRIMER UNE LIAISON
 LIRE    (*) = LIRE UN FICHIER
 LISTER     = LISTER TOUS LES OBJETS, OU (*) UN OBJET
 MASQUE    = MASQUER OU DEMASQUER LES EVOLUTIONS DU DESSIN
 MODIF   (*) = MODIFIER UN OU DES OBJETS
 PHOTO     = POSITIONNER L'OPTION PHOTO A RIEN,
              MANUEL OU AUTOMATIQUE
 SUPP    (*) = SUPPRIMER UN OU DES OBJETS
 UNITE     = CHANGER LES UNITES D'ENTREES-SORTIES
 VOIR      = VISUALISER SANS COLORATION INTERNE L'ENSEMBLE OU (*) UN OBJET
              EN MONTRANT LE MAILLAGE
 ZERO      = REMETTRE A ZERO LES TABLES DU SYSTEME
 SNAP      = VISUALISER UN RESUME DES TABLES


 CES ORDRES POSENT LES QUESTIONS NECESSAIRES A LEUR EXECUTION.

 IL SUFFIT DE TAPER LES 4 PREMIERS CARACTERES D'UN ORDRE
 DANS CERTAINS CAS (*) LE NOM DU FICHIER OU DE L'OBJET
 CONCERNE PEUT ETRE DONNE APRES L'ORDRE
 MASQUE N'A PAS DE PARAMETRES. C'EST UN INVERSEUR

 ***

 ORDRE ?
 OOOOO ?
```

Table 4.1(b) Commands of colour graphics DESSIN for TEK4115

(Translated from Table 4.1(a))

Name	Contents
* CATA	Display CATHARE results without the drawing of meshing
* CATM	Display CATHARE results with the drawing of meshing
CONCATNER	Make one component of graph from two meshed components
* COPIE	Create one component by making a copy from other one
* CREE	Create one component by giving its description
* DEPLACR	Move one component.
* DEVICE	Indicate the kind of terminal and/or the kind of library for graphics
DUMP	Print out the table
* ECRIRE	Write one file
EXAMINER	Look at the results from one calcu. and display the chosen results
FIN	End of the execution of DESSIN
FLICHE	Modify the arrows used for velocity
GRAPHE	Enter or change the information of the drawing
HELP	List the commands of the first level
LIER	Create, modify, suppress one junction
* LIRE	Read one file
LISTER	List the all the components, or (*) one component
MASQUE	Mask or unmask the evolution of the drawing
MODIF	Modify one or many components
PHOTO	Make the following option for photo, nothing, manual or automatic.
* SUPP	Suppress one or many components.
UNITE	Change the unit for I/O.
VOIR	Display one or all the components without colour and showing the meshing.
ZERO	Set tables to zero.
SNAP	Display a summary of the tables.

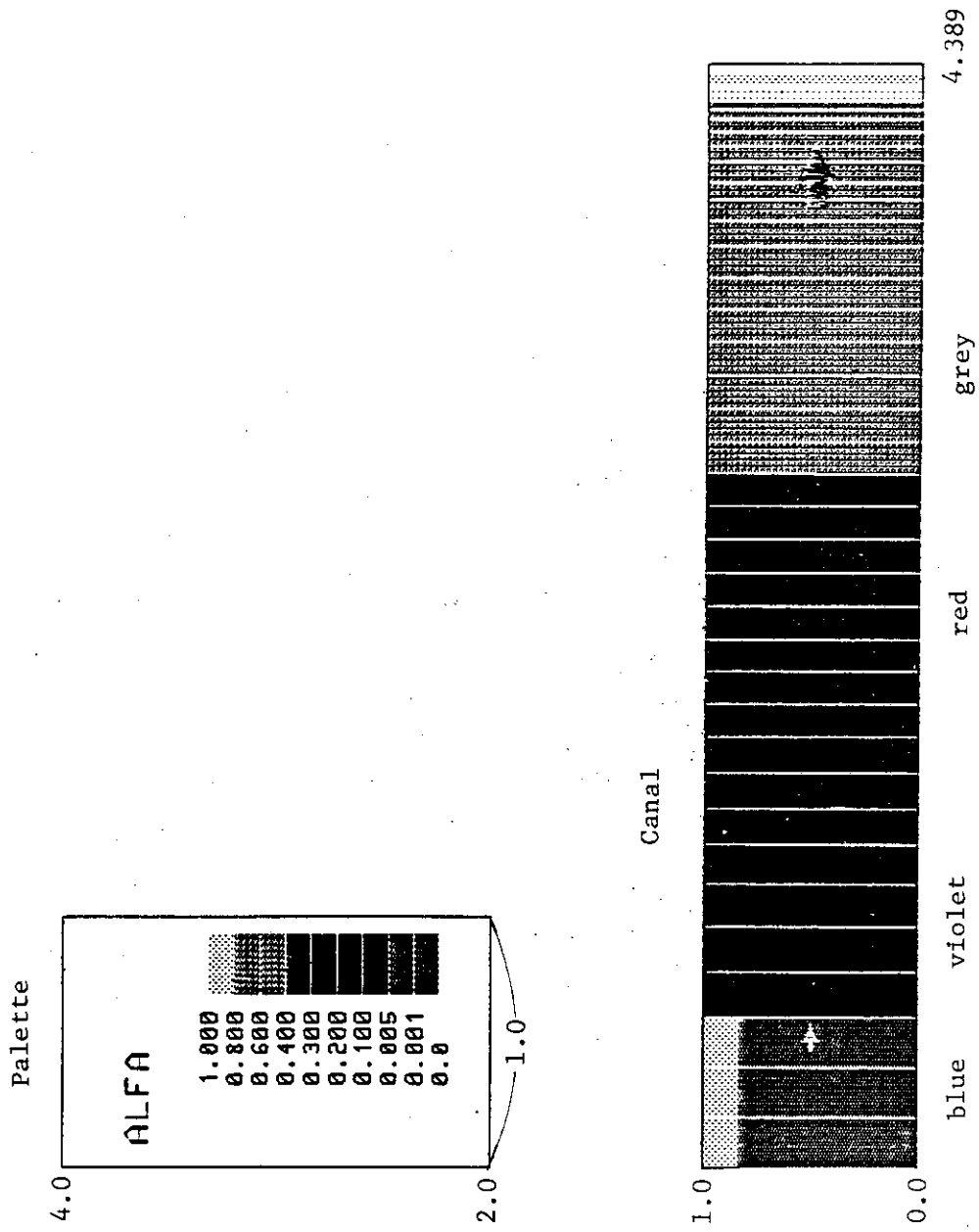

Fig. 4.14 Output graph by DESSIN

5. Implementation of CATHARE Code

5.1 Functions of Esope Language

Esope language is a Fortran extension language which was developed by the CATHARE team. The Esope has the following functions:

(1) To expand INCLUDE statement :

%INC (or -INC) statement is expanded into a sequence of COMMONs and other declarative statements by using SEGMENT and COMMON descriptions defined on a INCLUDE file. The %INC is usually used for the definition of a labeled COMMON.

(2) To vary dimensioning and in order to manage the memory :

The Esope is linked with GEMAT library for this purpose. Variable name defined on SEGMENT and COMMON is changed into a different one and an adaptable dimension is given. The new name has a form OOX, where X is an alphabet (**).

The memory is dynamically allocated ultimately by the calls of assembler routine GETMAIN.

(3) To allow the generation of different kinds of Fortran according to the computer and its characteristics :

If a line beginning with %IF is found and if the keywords written after %IF do not match with the predefined ones, then the program sequence is skipped until a card with %ENDIF is found.

An important option related to computer characteristics is whether or not it allows a mixed use of REAL, DOUBLE PRECISION or INTEGER type variables with CHARACTER type ones in a COMMON statements. If the Fortran compiler accepts the mixed use, CHAR = SIMPLE is specified, if not CHAR = COMPLET is specified. Since FACOM Fortran77 is used on a 32-bits word computer at JAERI and the mixed use of CHARACTER variables in COMMON is allowed, the precompiler option may be

'FORT=IBM, FORT77, CHAR=SIMPLE.

But in the CEA provided version, CHAR = COMPLET was specified, therefore CHAR = COMPLET should be specified for compatibility.

** But this name change makes the program unintelligible, and furthermore, increases the computing time because of indirect adressing.

5.2 Esope Precompiler

The Esope precompiler is a translator from source program in Esope language into Fortran77. The load module of the precompiler Esope is created as follows (see Fig. 5.1) :

(1) Use the following 9 assembler routines (members) in the JAERIGEM. ESOPE file.

ADDADD, ADDMEMB, ADDSUB, ADDWHAT, ALZDATA, ALZHEUR, AOOOZEM, AOOOZGM, AOOOZPM.

(2) Change assembler macro names from IBM to FACOM ones if different. The changed macro names are

IEFZB4D0 => KDJZB4D0, IEFZBD4D2 => KDJZB4D2.

(3) Create a GEMAT load module from the assembler routines in library form. Use the assembler option BATCH, NAME, and the linkage option NCAL, ALIAS, LET.

(4) Compile JAERIGEM·FORT77 and link with the above load module. Use the compiler option NAME and the linkage option NCAL. The subroutines OOOZZA, OOOZZ3 should be modified as Figs. 5.2 and 5.3, respectively.

The modification ZZA is for avoiding the competitive use of dynamic allocations. In fact, the GEMAT regards all the program area requested by a job as available exclusively, while FACOM Fortran77 I/O library makes a request for another dynamic allocation for buffer area. We modified the GEMAT, therefore, to free the area once obtained by GEMAT in some extent in order to reserve the I/O buffer area (see LREG in Fig. 5.2).

The modification ZZ3 is for adjusting the mismatch of COMMON lengths assigned for CHARACTERs and other variables. This correction is suggested from CEA Grenoble. This modification results from the fact that the original JAERITRA·FORT77 was translated with the option CHAR = COMPLET. If the program in Esope would be translated with the option CHAR = SIMPLE, this modification would not be necessary.

(5) Compile JAERITRA·FORT77, and link the above GEMAT library and the JAERI scientific subroutine library SYS9·JSSL·LOAD with it. The file name of the load module ESOPE is TRANS·LOAD(ESOPE)

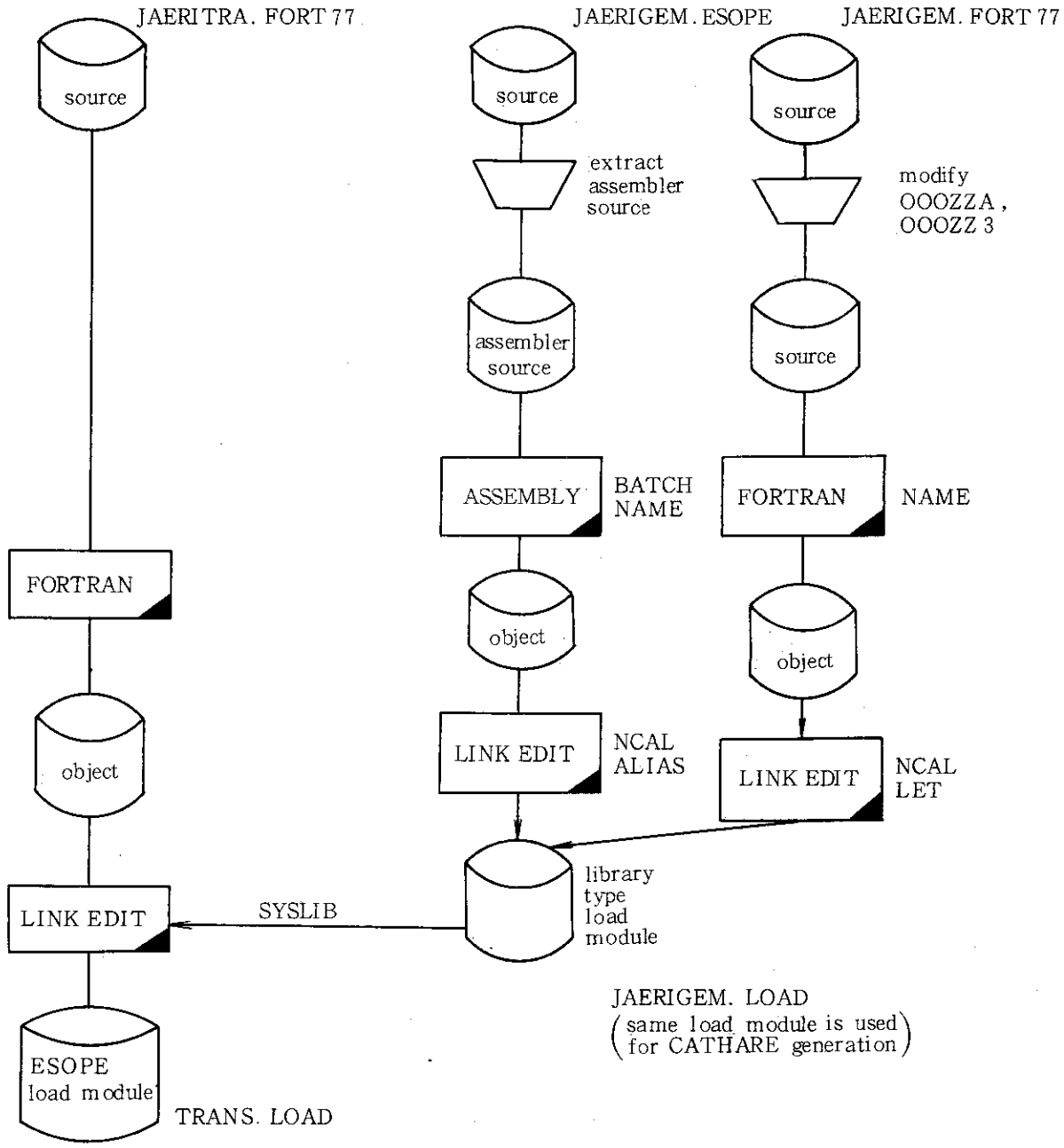

Fig. 5.1 Generation of ESOPE

```
      SUBROUTINE 000ZZA (LREG)
C     SEGMENT , PSEGM(0)*I
      INTEGER00I(1),00A,00T,00V,00G,001,002,003,004,PSEGM
      EQUIVALENCE(00V(1),00I(1))
      COMMON/000COM/00A(1),00T,00V(8)
      CALL 000ZGM (LRET,00V,IREG,LREG,0)
      IF (LRET.EQ.1) LREG=0
C.NS
      IF (LREG .GT. 0)   THEN
          LREG = LREG - 100000
          IF  (LREG .LT. 0)   LREG = 0
      END IF
C.NS
      END
```

Fig. 5.2 Modification of subroutine 000ZZA

```
      SUBROUTINE 000ZZ3
C     SEGMENT , S
      INTEGER00I(1),00A,00T,00V,00G,001,002,003,004,S
      CHARACTER00H*1
      EQUIVALENCE(00V(1),00I(1))
      COMMON/000COM/00A(1),00T,00V(8)
      COMMON/000COG/00G
      COMMON/000COH/00H
C.NS
      I¥LOCI = LOCF(00I(1)) / 4
      I¥LOCH = LOCF(00H)    / 4
      00G    = I¥LOCI - I¥LOCH
C.NS
                                                          RETURN
      END
```

Fig. 5.3 Modification of subroutine 000ZZ3

5.3 GEMAT Library

Subroutines of JAERIGEM·ESOPE file are selectively used not only by precompiler Esope, CATHARE and SYSTEM, but also used by graphic softwares. It is, therefore, convenient for the later load module creations to have a GEMAT load module in a library form. The GEMAT library can be similarly created through the steps (1) - (4) in the precompiler generation, and by linking the members REDREC and SYSTER from JAERILOG·FORT77, and LEQT1B in IMEL (Fig. 5.4(a)). LEQT1B is a subroutine for solving linear equations with a band matrix. The source program of LEQT1B is now stored in JAERILOG·FORT77(LEQT1B).

5.4 Postprocessor SUITE

The precompiler Esope translates the program written in Esope without consideration of the constraints of Fortran : The precompiler happens to generate the statement with more than 20 lines. SUITE is used in this case to divide a long Fortran statement into two statements or more. So, the program SUITE is a postprocessor for Esope precompiler and also is a preprocessor for Fortran compiler. Load module of SUITE is generated from a member SUITE of the file JAERILOG·FORT77 (Fig. 5.5), and it is stored in TRANS·LOAD(SUITE).

The procedure for the use of SUITE is already shown in Fig. 3.2(d).

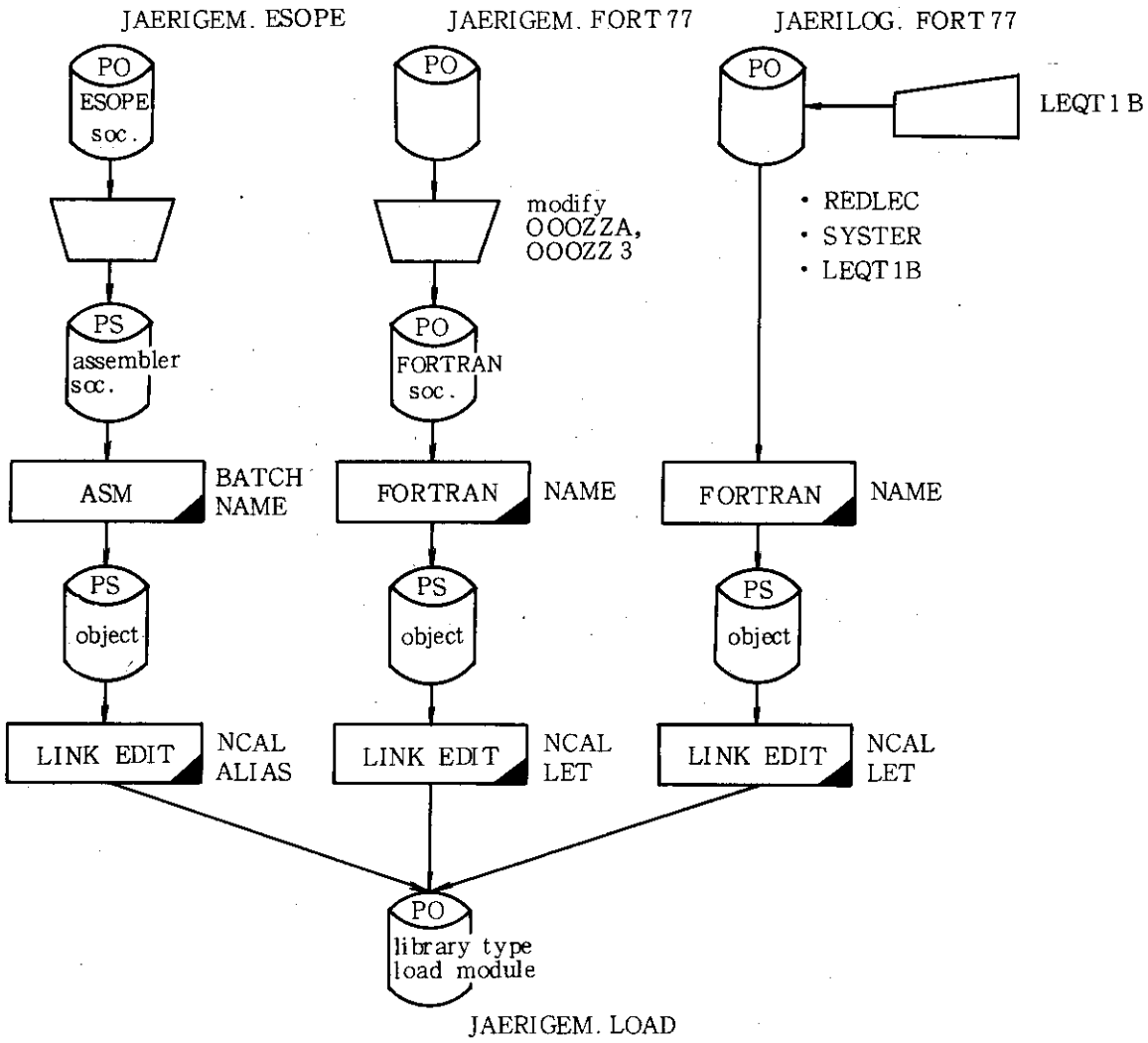

Fig. 5.4 Generation

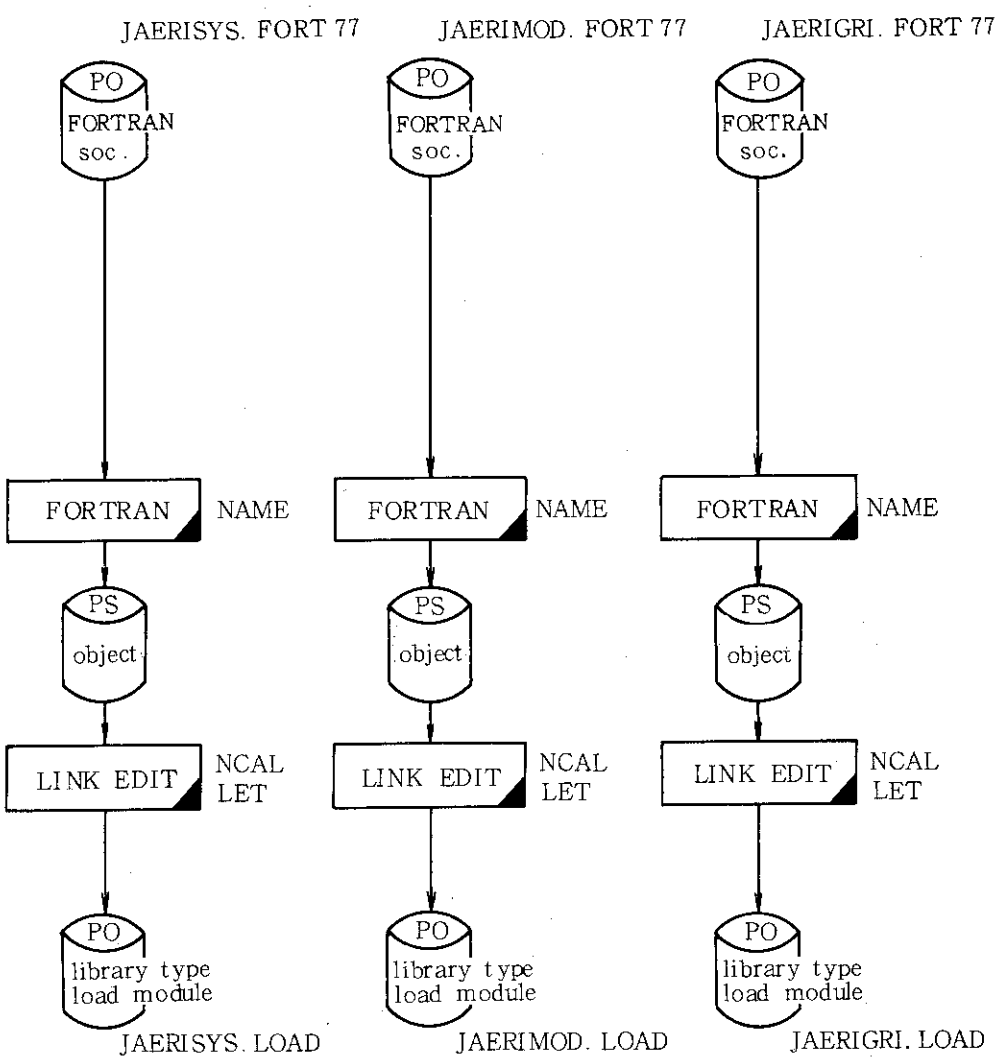

of CATHARE library

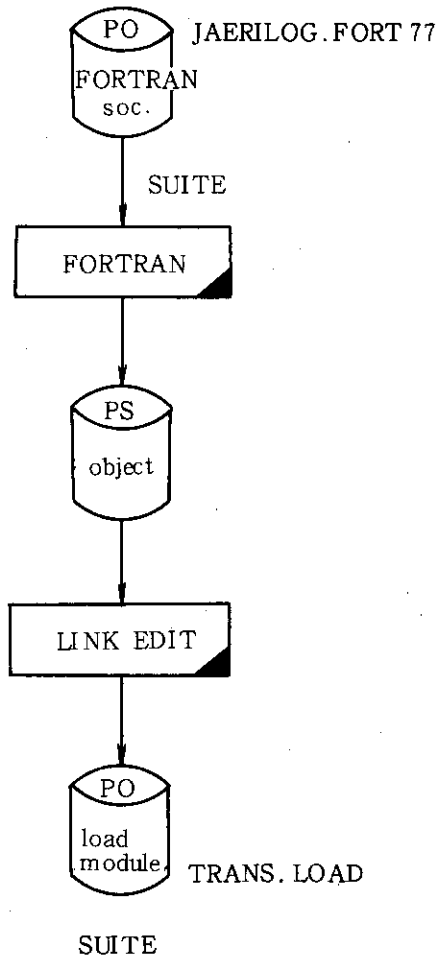

Fig. 5.5 Generation of SUITE

5.5 CATHARE Load Module

The load module of CATHARE is generated basically by linking the following six libraries;

JAERISYS·LOAD, JAERIMOD·LOAD, JAERIGRI·LOAD, JAERIGEM·LOAD, LINPACK·LOAD, SYS9·JSSL·LOAD.

The procedure of CATHARE generation is as follows :

(1) Compile JAERISYS·FORT77, JAERIMOD·FORT77 and JAERIGRI·FORT77 independently and create a library type load modules (Fig. 5.4). Specify the compile option NAME and linkage options NCAL, LET.

(2) Create LINPACK library. The LINPACK subroutines used in CATHARE are only SGEFA and SGESL both of which are used for solving a system of linear equations. But in JAERI LINPACK the names DGEFA and DGESL are used instead of SGEFA and DGESL.

(3) Link with GEMAT library previously generated (where LEQT1B, REDREC and SYSTER are added), JAERI scientific subroutine library SYS9·JSSL·LOAD, and above four libraries (Fig. 2.1).

5.6 Separator CREE

CREE is used for separating the main routine from input data. The load module of CREE is generated by compiling a member CREE in the file JAERILOG·FORT77 and linking the GEMAT library (Fig. 5.6). The load module name is TRANS·LOAD(CREE).

The file names generated for JAERI implementation are shown in Table 5.1. And the list of command procedures TRACE and CREE are given in Appendix A.

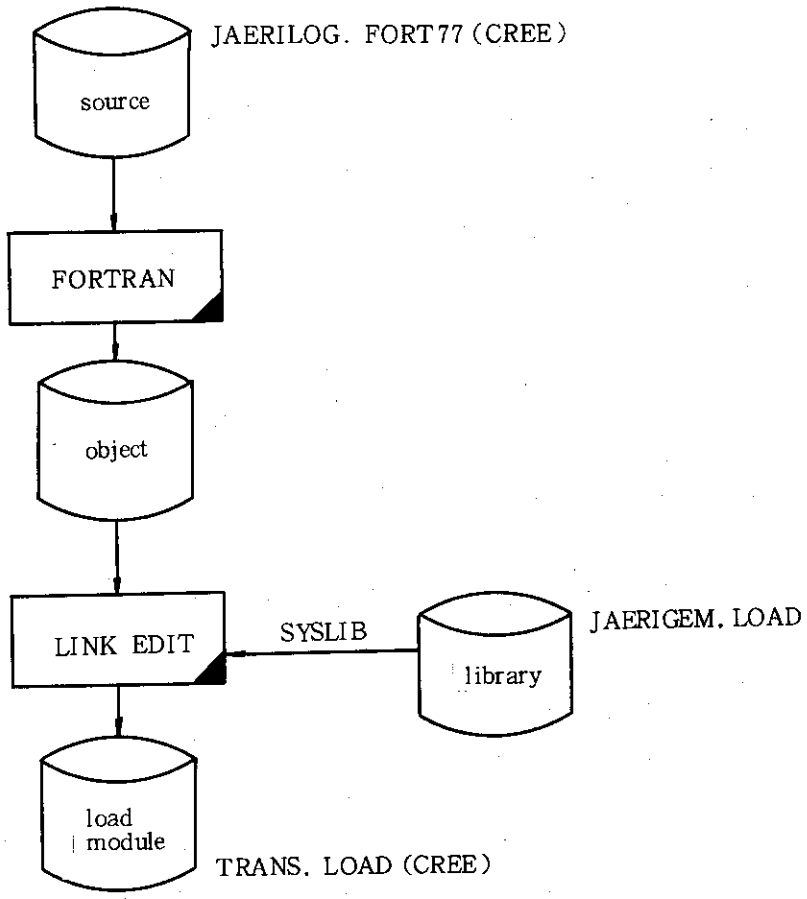

Fig. 5.6 Generation of separator CREE

Table 5.1 Files newly generated for JAERI implementation

No.	File name	Contents
23.	CATHARE.CNTL	JCLs for CATHARE code implementations and in order to use them
24.	CATHARE.CLIST	TSS command procedures for CATHARE code implementation and in order to use them
25.	TRANS.LOAD	Load modules of precompiler Esope, separater CREE, SUITE, etc.
26.	GRAPH.LOAD *	Load modules of TRACE, TEK4014, TEK411X (same as TRACE.LOAD, TEK4014.LOAD, TEK411X.LOAD)
27.	JAERIGEM.LOAD	GEMAT library (Library type load module)
28.	JAERISYS.LOAD	'SYSTEM' library
29.	JAERIMOD.LOAD	CATHARE (calculational) Module library
30.	JAERIGRI.LOAD	GRILLE library
31.	LINPACK.LOAD	Library of LINPACK subroutine package (51 subroutines) developed in ANL
32.	TCS3P.OUTLIST	Output list (FT06) of the sample problem TCS3P
33.	TCS3P.GR.DATA	Graphic data (FT11) of the sample problem TCS3P
34.	TCS6P.OUTLIST	Output list of the sample problem TCS6P
35.	TCS6P.GR.DATA	Graphic data of the sample problem TCS6P
36.	CANONGB.OUTLIST	Output list of the sample problem CANONGB
37.	CANONGB.GR.DATA	Graphic data of the sample problem CANONGB
38.	CANONPB.OUTLIST	Output list of the sample problem CANONPB
39.	CANONPB.GR.DATA	Graphic data of the sample problem CANONPB
40.	CANONV.OUTLIST	Output list of the sample problem CANONV
41.	CANONV.GR.DATA	Graphic data of the sample problem CANONV
42.	ERSTUBE.OUTLIST	Output list of the sample problem ERSTUBE
43.	ERSTUBE.GR.DATA	Graphic data of the sample problem ERSTUBE
44.	G2.OUTLIST	Output list of the sample problem G2
45.	G2.GR.DATA	Graphic data of the sample problem G2
46.	SMDTC.OUTLIST	Output list of the sample problem SMDTC
47.	SMDTC.GR.DATA	Graphic data of the sample problem SMDTC

Table 5.1 continued

48. SMDTL.OUTLIST		Output list of the sample problem SMDTL
49. SMDTL.GR.DATA		Graphic data of the sample problem SMDTL
50. CATFT11.DATA	*	Graphic data of the sample problem CANONGB (same as CANONGB.GR.DATA)
52. LGI.DATA	*	Intermediate graphic language (LGI) for CANONGB
53. TRACE.LOAD		Load module of TRACE
54. TEK4014.LOAD		Load module of TEK4014
55. TEK411X.LOAD		Load module of TEK411X
56. IFINC.LOAD		Load module of IFINC
67. EXTRACT.LOAD		Load module of EXTRACT
58. AVOIR.LOAD		Load module of DESSIN
59. CATLIB1.LOAD		Graphic library for DESSIN and EXTRACT
60. DESLIB.LOAD		Graphic library for DESSIN
61. CMD.CLIST		Command procedures for TRACE, TEK4014, TEK411X, EXTRACT, DESSIN
62. CATHARE.GR.CLIST		Command procedures for laser printer output of classical graphics in JAERI
63. CATHARE.GR.CNTL		JCL for laser printer output of classical graphics in JAERI
64. CATTATBN.FORT77		Source program of JAERI TRACE library for laser printer
65. CATLIBN.LOAD		Load module of JAERI TRACE library
66. CATTRACE.FORT77		Source program of JAERI TRACE for laser printer
67. NTRACE.LOAD		Load module of JAERI TRACE

* Not necessary (Doubly stored)
The sequence number is continued from Table 2.1 since the contents of the files of Tables 2.1 and 5.1 are stored in one magnetic tape in this sequence order.

6. Implementation of Graphic Software

6.1 Graphic Library CATLIB1 Generation

It is convenient to create a graphic library of the subroutines used in common both for the classical and colour graphics. Then, as a preliminary work, a graphic library CATLIB1 is created using four files provided by CEA (see Fig. 6.1) :

(1) 9 assembler routines from ADDADD to AOOOZMP of the file JAERIGEM·ESOPE.

(2) Assembler routines of TEKT·ASM, where the routines ADEIN and ADEOUT are excluded because ADEIN and ADEOUT must be replaced according to the graphic terminal in use.

(3) The subroutines of TRACE·FORT77 except for READ@.

(4) All subroutines of TATB·FORT77

Use the option ALIAS, when linking the above four file groups.

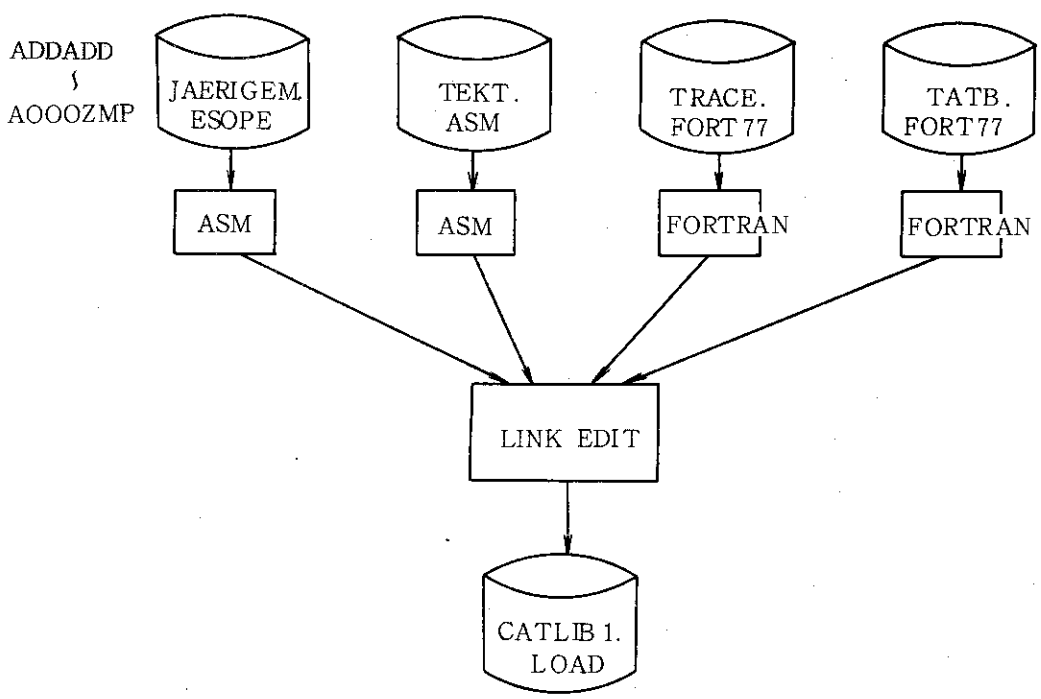

Fig. 6.1 Generation of CATLIB1 library

6.2 Classical Graphics

The classical graphics uses TATB library to generate the LGI. The plotter subroutines so called as editors were provided by CEA for the terminals TEK4014, TEK411X and IBM3279. In addition, IBM assembler subroutines are provided for TEK4014 and TEK4115, but the routines

ADEIN and ADEOUT which perform Tektronix I/O should be replaced by the JAERI ones.

6.2.1 LGI Generator TRACE

Intermediate graphical language (LGI) generator is created as Fig. 6.2.

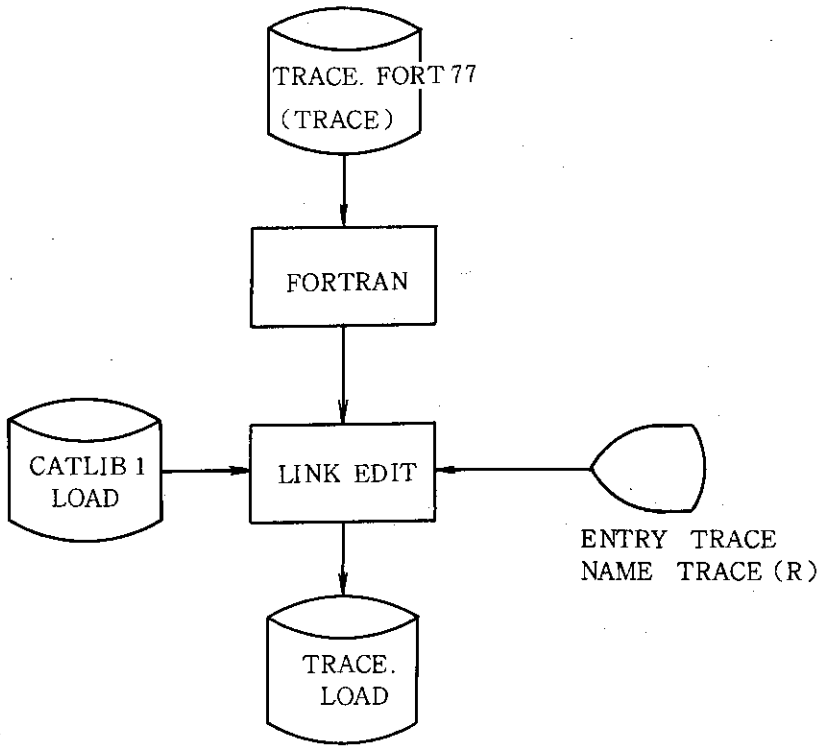

Fig. 6.2 Generation of TRACE

6.2.2 Graphic Processing Programs on TEK4014 and TEK4115

Load modules for classical graphics on TEK4014 and TEK4115 are created as Fig. 6.3 :

(1) Use the members EDV and TEK41XX of EDIT·FORT77 for the creation of the load module TEK4115, and use a member TEK4014 for TEK4014 in place of TEK41XX. Here EDV is the main routine.

(2) Link with the ADEIN and ADEOUT routines for TEK4014 and TEK4115 of the JAERI graphic library SYS9·IGL·LOAD.

6.2.3 Laser Printer in Batch Mode

The CEA provided classical graphics uses TATB interface which was developed at computer company CISI, while the graphics at JAERI has usually used Tektronix PLOT10 as the user interface. So, the

implementation on a laser printer requires a lot of work. Under full understanding on the present classical graphics after a careful investigation, we have rewritten the TRACE program for NLP output. The TRACE routines are modified so as to use the JAERI PLOT10 interface instead of TATB. That is, within the original TATB library, the subroutines to draw lines and symbols are replaced by appropriate JAERI PLOT10 routines, which contains changes of calling sequences, subroutine names, and numberical conversion of the arguments. The detail description is omitted here.

There are two steps to implement the classical graphics on NLP. The first is to create a TRACE library for JAERI and the second is to create the load module of JAERI.TRACE. The overview of the implementation methods are shown in Figs 6.3A and 6.3B, respectively. And the JCLs are given in Table 4.10B(a) and 4.10B(b), respectively.

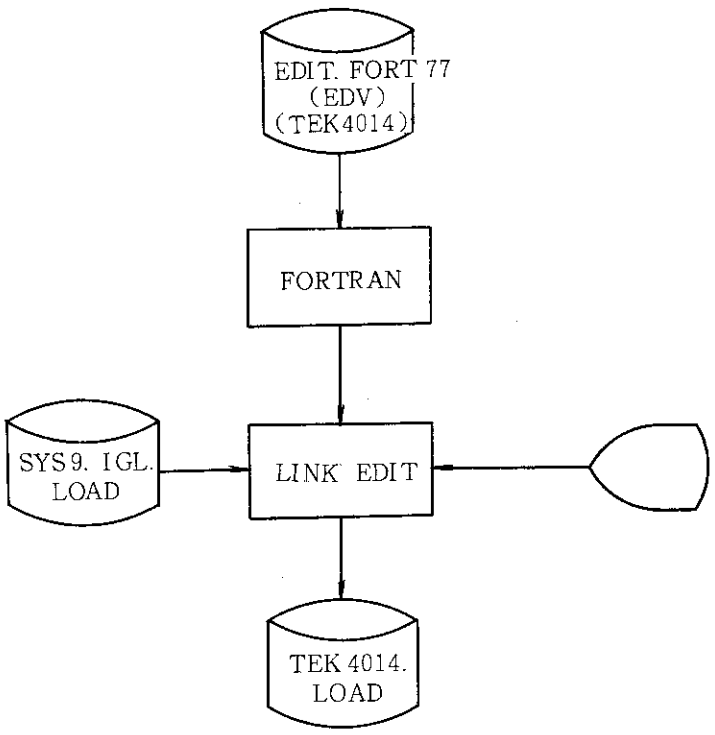

Fig. 6.3 Generation of TEK4014 (and TEK411X)

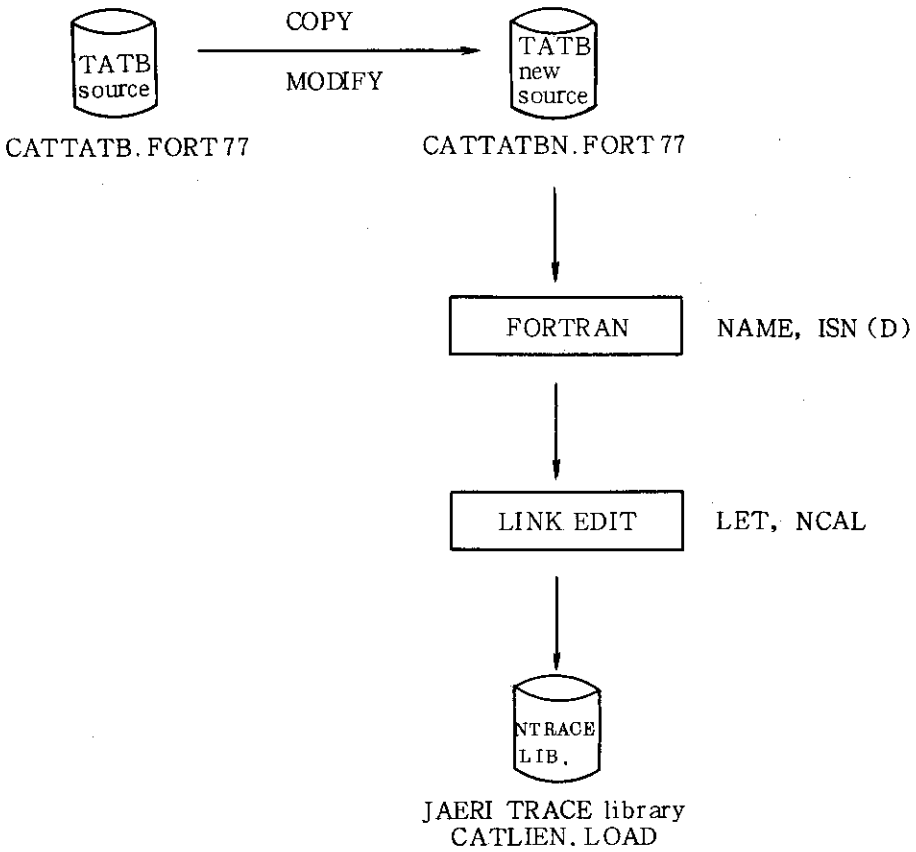

Fig. 6.3A Generation of JAERI TRACE library

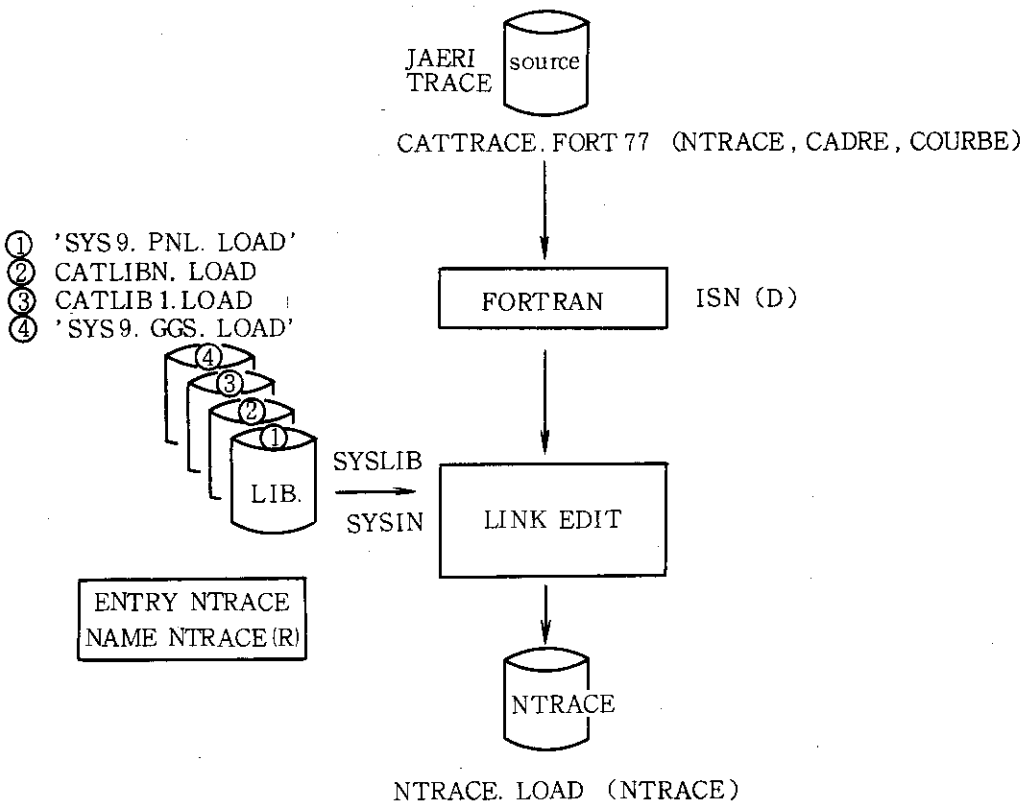

Fig. 6.3B Generation of JAERI TRACE load module

6.3 Conversational Colour Graphics DESSIN

6.3.1 Preprocessor IFINC and DESSIN Library DESLIB

In order to create the load modules EXTRACT and DESSIN, a preprocessor IFINC has to be created. The IFINC is used for the treatments of %IF and %INC both of which facilitate the selection of coding of source programs according to the computer used, and the expansion of the INCLUDE files, respectively.

It is also convenient to make a library DESLIB which contains all the members of DESSIN·FORT77. First we must create the load module of IFINC before the creation of DESLIB. Second the DESSIN·FORT77 is preprocessed by the preprocessor IFINC so as to select an adaptable Fortran source of DESSIN (and EXTRACT) and to treat %INC. Third the library DESLIB is created by linking the files DESSIN·FORT77 and TEKT·FORT77.

The load module of IFINC is created from the file B·FORT77 (Fig. 6.4.(a)). In order to run the IFINC, FT03 is used for reading the input data B·CNTL(MVSTK13) to control the treatment of INCLUDE, and FT04 is specified for the output of the source program (Fig. 6.4(b)).

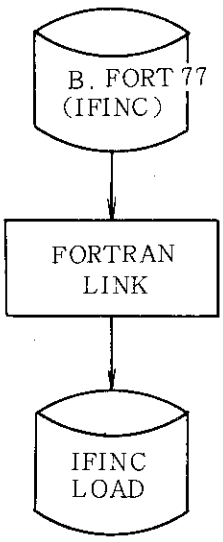

Fig. 6.4(a) Generation of IFINC

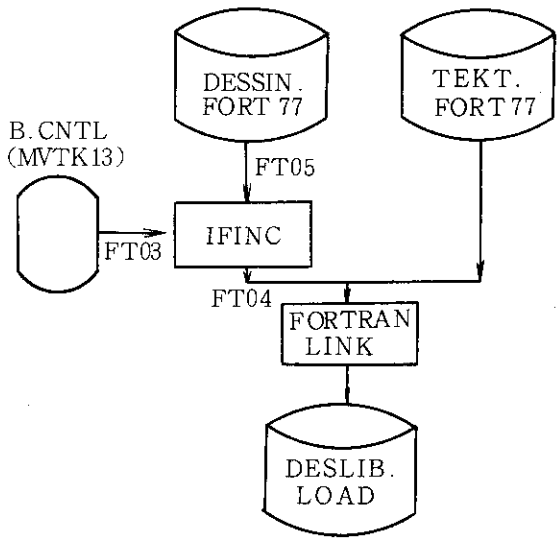

Fig. 6.4(b) Generation of DESLIB

6.3.2 EXTRACT and DESSIN

The creation of load module EXTRACT is illustrated in Fig. 6.5. There are two steps for implementation :

(1) Preprocess the main program AFXTRACT by IFINC, where EXTRAC is the entry name of AEXTRACT.

(2) Link the subroutines of the libraries CATLIB1, DESLIB, and the JAERI graphic library SYS9·IGL·LOAD. At the linkage, ENTRY EXTRAC and load module name EXTRACT(R) are specified.

The creation of the load module DESSIN is similar, where the entry name and the main program name are both AVOIR and the load module name is DESSIN.

By creating the CATLIB1 and DESLIB beforehand, all the subroutines rooted from the entry EXTRACT (or AVOIR) can be linked together. The subroutine NCAL which also is a member of B·FORT77 is not used at JAERI by using the creation method above.

The file names newly created for JAERI implementation are shown in Table 5.1. The list of command procedures TRACE, TEK4014, TEK4114, EXTRACT, and DESSIN are shown in Appendix A.

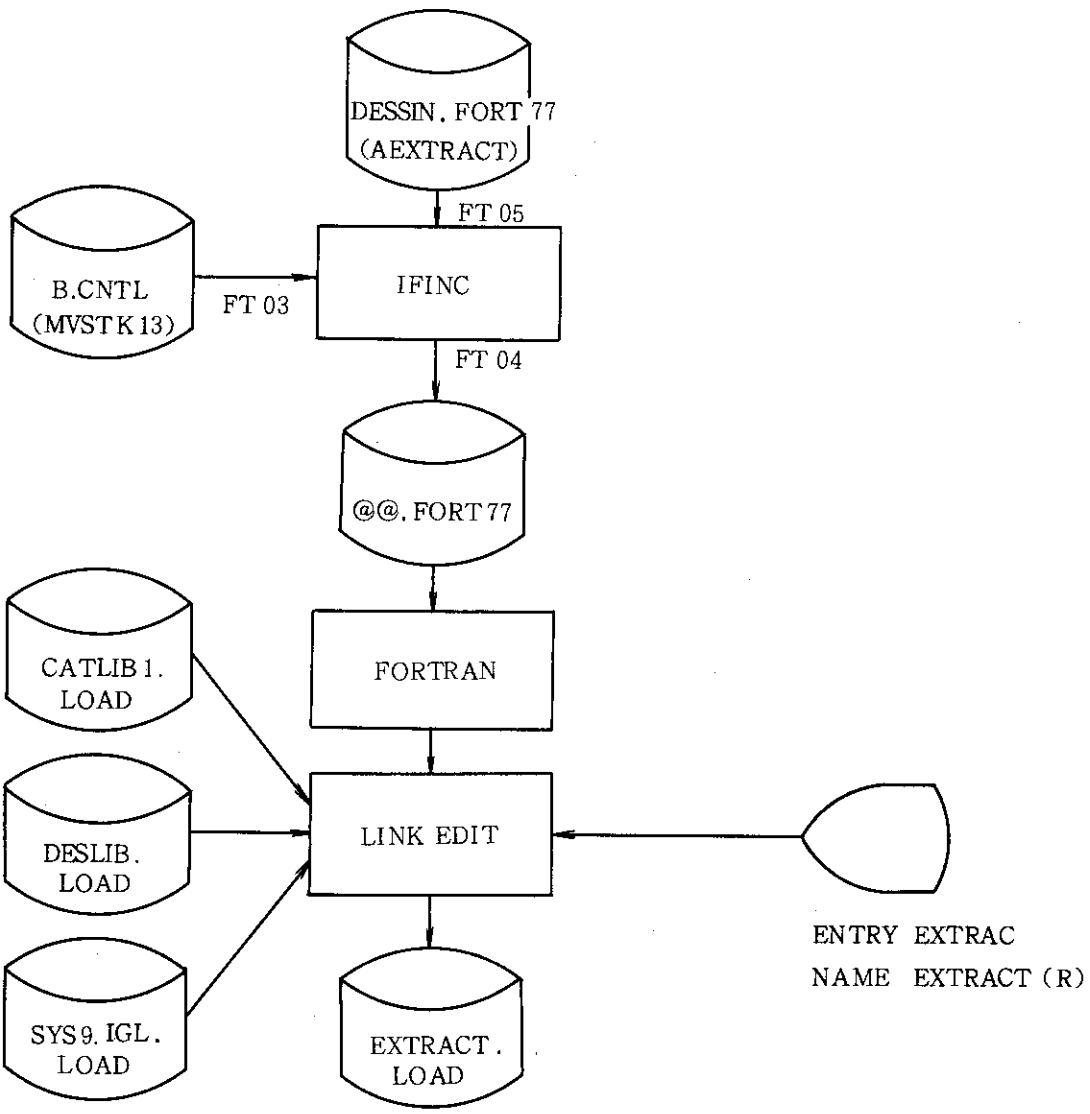

Fig. 6.5 Generation of EXTRACT (and DESSIN)

7. Special Problems in Implementing the CATHARE Code on JAERI Computer

Whenever we encountered a problem or difficulty on the way of implementation at JAERI, we consulted it with CATHARE team of CEA Grenoble by Telex and Telecopy, with Mrs. M. Boulet with respect to CATHARE code, and with Mr. B. Ranson with respect to graphics. Here some problems specific to JAERI implementation are shown since JAERI computers are operated under different software environment from ISPRA.

7.1 Problems in Implementation of CATHARE Code

We describe the problems which are consulted with CEA Grenoble in order of occurrence :

(1) The following entry names are undefined : STEMPS (for getting the remaining CPU time), XTKJBN (for getting job number), SGEFA, SGESL (in LINPACK library), LEQT1B (in IMSL library). We have replaced the entries STEMPS and XTKJBN by the corresponding FACOM ones. We use SGEFA and SGESL of JAERI LINPACK library (see Section 5.6).

(2) Execution error 0C4 occurs when executing the precompiler Esope. This error comes from an inconsistent use of precompiler option CHAR. The error is corrected by the modification shown in Fig. 5.3 (see Section 5.2).

(3) Execution error 80A occurs during execution of CATHARE when using dynamic allocation. This error comes from competitive use of dynamic allocation by the GEMAT and FACOM Fortran77 I/O libraries. The error is corrected by the modification shown in Fig. 5.2 (see Section 5.2).

(4) Floating point overflow occurs during execution of CATHARE in the case of TCS3P and TCS6P. This error comes from the original coding error in subroutine HEXIGV. The error is corrected by the CATHARE team.

7.2 Problems in Implementation of Graphic Software

(1) As for the graphic library, JAERI uses special terminal I/O routines PTS, which is somewhat different from the standard Tektronix IGL. First, JAERI allows a binary synchronous communication (BSC) method for data transmission in addition to teletype method (TTY). Second, the buffer format for terminal I/O is different from that of IGL, since JAERI terminal routine inserts extra control bytes

at the top and the tail of the buffer immediately before the graphic output. Therefore, when implementing the classical graphics on TEK4014 and TEK4115 at JAERI, we must use the IGL format for terminal I/O buffer but we need the BSC method. So, we replace the terminal I/O routines ADEIN and ADEOUT for our purpose (see Sections 6.1 and 6.2).

(3) As for the colour graphics DESSIN, we have a problem, though it is not so important, on the change of colours on palette, because we don't know which number corresponds to which colour.

7.3 Comparison of Computed Results

We asked Mr. C. Chauliac to check the computed results on FACOM. We will show here the result of Chauliac's validation :

He checked the output results of M-380 by visualizing them using classical graphics. The results are correct from his point of view.

He made some comparisons between the results of Grenoble CRAY-1 and those of FACOM M-380 for a sample problem TCS3P. The output lists of CRAY (magnetic tape) were brought from CEA Grenoble by a JAERI staff.

For example, if one takes times t = 655.711 sec. for FACOM and t = 655.736 sec. for CRAY, the discrepancy on pressure between the two calculations is 0.02 bar and difference on void fraction is up to 0.03. The larger difference is at DOWNINT. These discrepancies are small enough to run the code without problem, however, they are larger than what we have expected.

The average time step is about 8% smaller on FACOM than on CRAY at the end of the calculation performed here (t = 680 sec.). We have observed such a trend on FACOM because larger number of Newton iterations are required for FACOM.

8. Error Correction Method for CATHARE Code

8.1 Preliminary Remarks

CATHARE code is written in three kind of languages as follows :

(1) IBM assembler,

(2) Fortran,

(3) Esope.

The precompiler Esope translates the source program written in Esope to Fortran language.

The method of error correction depends on the language types and file types. In this chapter, the error correction method is described for each of the files. When the error correction ranges over several files at a time, it is necessary to give attention to the order of correction to be done.

After the correction was over by using the method described later, the modified CATHARE code should be run to validate the computed results. It will be helpful to compare the results in graphs with those of old version.

8.2 JAEITRA·ESOPE

This file is the source program of precompiler Esope. The precompiler itself is written in Esope. The file consists of source program and INCLUDE source. The error correction method is different between the source program and INCLUDE source. The name of the INCLUDE source begins with the character 'I' as shown in the directory list of Appendix B.

(1) To correct the Esope source program

1) Correct errors in the program.

2) Copy the member to a temporary PS-file.

3) Execute precompiler Esope, where

```
Execution parameter ... FORT=IBM,FORT77,CHAR=COMPLET,
DD name   FT05F001  ... file generated by step 2),
          INCLIB    ... Esope INCLUDE file (JAERITRA·ESOPE),
          FT01F001  ... output file of Esope,
          FT06F001  ... check list.
```

4) When the translated Fortran source contains a Fortran statement which exceeds the limit of continuation lines, execute the post-processor SUITE to separate the Fortran statement into two or more statements which will be accepted by the Fortran compiler,

where

DD name FT01F001 ... file generated by step 3),
FT16F001 ... modified Fortran source file,
FT06F001 ... check list.

5) Replace the old members of JAERITRA·FORT77 by the members generated with the step 3) or 4).
6) Compile JAERITRA·FORT77, and link GEMAT library and SYS9·JSSL. LOAD in order to create a new load module.

(2) To correct the Esope INCLUDE source

1) Correct errors in the INCLUDE source.
2) Execute the steps (1) 2) - 5) for all the Esope source programs (57 members).
3) Execute the steps (1) 6), in order to generate a new load module.

8.3 JAERIGEM·ESOPE

This file contains source programs of GEMAT library. The GEMAT library is used to create the load modules ESOPE and CATHARE. The file contains IBM assembler source, Esope source program, and Esope INCLUDE source. The members beginning with 'A' are assembler source programs, the members beginning with 'I' are Esope INCLUDE source, and the others are Esope source programs in the directory list of APPENDIZ B.

(1) To correct the IBM assembler source program

1) Correct errors in the program.
2) Generate the library type load module, where
   Assemble parameter ... BATCH,NAME,
   Linkedit parameter ... NCAL,ALIAS.
3) Replace the members of JAERIGEM·LOAD.
4) Execute the steps described in Section 8.2 (1) 6), in order to regenerate ESOPE load module.

(2) To correct the Esope source program

1) Correct errors in the program.
2) Copy the member to a temporary PS-file.
3) Execute the precompiler Esope. See Section 8.2 (1) 3) but JAERIGEM·ESOPE is used for INCLIB.
4) When the translated Fortran source contains a Fortran statement which exceede the limit of continuation lines, use the procedure

as similar to the Section 8.2 (1) 4).

5) Replace the old members of JAERIGEM·FORT77 by the members generated from the step 3) or 4).

6) Compile and link the corrected program in order to create library type load module, where

   Compile parameter ... NAME,

   Linkedit parameter ... NCAL,LET.

7) Replace the members of JAERIGEM·LOAD.

8) Execute the procedure described in Section 8.2 (1) 6), in order to generate new load module ESOPE.

(3) To correct the Esope INCLUDE source program

1) Correct errors in the program.

2) Execute the procedure described in (2) 2) - 5) for all Esope source programs (64 members).

3) Compile and link the all members of JAERIGEM·FORT77 in order to create library type load module.

4) Replace the members of JAERIGEM·LOAD.

5) Execute the procedure described in Section 8.2 (1) 6), in order to regenerate the load module ESOPE using new GEMAT library.

8.4 JAERISYS·ESOPE

This file contains source programs of SYSTEM library. All members are Esope source program. Esope INCLUDE source for SYSTEM is contained in JAERIINC·FORT77.

(1) To correct the Esope source program

1) Correct errors in the program.

2) Execute the precompiler Esope. See Section 8.2 (1) 3) but JAERIINC·FORT77 is used for INCLIB.

3) When the translated Fortran source contains a Fortran statement which exceeds the limit of continuation lines, use the procedure in Section 8.2 (1) 4).

4) Replace the old members of JAERISYS·FORT77 by the members created with the step 2) or 3).

5) Compile and link the corrected program in order to create library type load module.

6) Replace the members of JAERISYS·LOAD.

8.5 Other Files

The files except for Esope, GEMAT, SYSTEM are written in Fortran. The error correction method for the Fortran programs is rather simple.

(1) To correct JAERIMOD·FORT77

This file contains source programs of MODULE library.

1) Correct errors in the program.
2) Compile and link the corrected program in order to create library type load module.
3) Replace the members of JAERIMOD·LOAD.

(2) To correct JAERIGRI·FORT77

This file contains source programs of GRILLE library.

1) Correct errors in the program.
2) Compile the corrected program, in order to create library type load module.
3) Replace the members of JAERIGI·LOAD.

(3) To correct JAERILOG·FORT77

This file contains source programs of CATHARE utility and subroutines for library.

(3-1) To correct the program CREE

1) Correct errors in the program.
2) Compile the program and link GEMAT library in order to generate the load module CREE.

(3-2) To correct the program SUITE

1) Correct errors in the program.
2) Compile and link the program in order to create the load module SUITE.

(3-3) To correct the subprograms REDREC and SYSTER

1) Correct errors in the program.
2) Compile and link the corrected program in order to create the library type load module.
3) Replace the members of JAERIGEM·LOAD.

(4) To correct JAPTEST·DATA

In the CEA provided file, main program and input data are

stored together as one member. After the errors are corrected, CATHARE code is to be run for validation according to the procedure given by Chapter 3.

(5) To correct JAERIINC·FORT77

This file contains Esope INCLUDE source for SYSTEM library. Some main programs provided by CEA after separated by CREE, are written in Esope and also refer to this INCLUDE source.

1) Correct errors in the program.
2) Execute the precompiler Esope for all members of JAERISYS·FORT77 where

```
Execution parameter ... FORT=IBM,FORT77,CHAR=COMPLET,
DD  name  FT05F001  ... Esope source program
                        (JAERISYS·ESOPE),
          INCLIB    ... Esope INCLUDE source file
                        (JAERIINC·FORT77),
          FT01F001  ... output file of Esope,
          FT06F001  ... check list.
```

3) Replace the old members of JAERISYS·FORT77 by the members generated with the step 2).
4) Compile and link all members of JAERISYS·FORT77 in order to generate library type load module.
5) Replace the members of JAERISYS·LOAD.

9. Computing Time Distribution over Subroutines

Tables 9.1 and 9.2 show the computing time distributions of the executions of CATHARE code in cases of sample problems ERSTUBE and TCS6P. The ERSTUBE simulates the experiment of ERSEC pipe. The measurements are performed by using a FACOM software tool FORTUNE. The tables include subroutine names (best 20), number of Fortran statements, number of executions, relative computing cost, and percent of the cost. But we must notice that the present measurements do not contain the cost of the subroutines in LINPACK library because we use a ready made LINPACK load module. Since the subroutines DGEFA and DGESL are called 3,744 and 21,216 times, respectively, in the case of TCS6P, then the time cost of them is considered to be very large, probably most time consuming one.

These tables give us an important information about which subroutines should be speedup in order to accelerate the execution of CATHARE code. It is found that the CATHARE code puts many computing time in the processing of GEMAT subroutines (OOOXXX type routines).

The total CPU-times used on FACOM M-380 were 19 min. 58 sec. for TCS6P and 1 min. 41 sec. for ERSTUBE.

Table 9.1 Computing time distribution for the calculation TCS6P

No	Routine	Lines	Executions	Cost	%
1	LEQT1B	140	1024	0.367483E+10	25.6
2	HELIM3	474	1460	0.156323E+10	10.9
3	FPMAT	773	1473253	0.962668E+09	6.7
4	PSFRON	432	499	0.925711E+09	6.5
5	FPEAU	314	291149	0.902260E+09	6.3
6	OOOYDE	245	260127	0.811247E+09	5.7
7	OOOYAC	201	256759	0.572258E+09	4.0
8	OOOSAV	131	533	0.529748E+09	3.7
9	H2MEMB	535	17526	0.404830E+09	2.8
10	FECPAR	683	17567	0.331452E+09	2.3
11	OOOZMR	11	6475	0.298748E+09	2.1
12	FCV	166	19046	0.282627E+09	2.0
13	PAROI4	149	6761	0.278839E+09	1.9
14	HCONTE	252	17524	0.237914E+09	1.7
15	FTVOI	549	33618	0.178918E+09	1.2
16	HMOMEN	221	16044	0.176067E+09	1.2
17	OUVERT	630	6858	0.172959E+09	1.2
18	HPAR1	252	17526	0.136874E+09	1.0
19	RANGE	225	1460	0.129356E+09	0.9
20	PSROCP	39	742592	0.118815E+09	0.8
	Others				12.1
	Total	76365		0.143458E+11	100.0

Table 9.2 Computing time distribution for the calculation ERSTUBE

No	Routine	Lines	Executions	Cost	%
1	NEUTRO	69	747	0.326722E+10	17.6
2	HELIM3	474	31653	0.304719E+10	16.5
3	OOOYDE	245	3440893	0.107339E+10	5.8
4	SYSLIN	875	5650	0.103298E+10	5.6
5	UNION	70	3517	0.798257E+09	4.3
6	H2MEMB	535	344666	0.791387E+09	4.3
7	OOOYAC	201	3440104	0.766480E+09	4.1
8	FPEAU	314	881556	0.578854E+09	3.1
9	HCONTE	252	344666	0.467008E+09	2.5
10	FDGM	88	413799	0.525004E+09	2.4
11	FTOVI	549	717828	0.362786E+09	2.0
12	HMOMEN	221	313013	0.343186E+09	1.9
13	OOOZMR	11	55962	0.323458E+09	1.7
14	RANGE	225	3517	0.290161E+09	1.6
15	FCV	166	455719	0.275367E+09	1.5
16	FQLE	354	427333	0.256407E+09	1.4
17	FQVE	215	427333	0.252006E+09	1.4
18	GVPER1	602	652	0.243984E+09	1.3
19	VELIM	109	17585	0.224019E+09	1.2
20	VOL	1572	37554	0.212187E+09	1.1
	Others				18.7
	Total	76365		0.185153E+11	100.0

Note:
(1) Total number of subroutines = 400
(2) Time costs of DGESL and DGEFA in LINPACK library are not measured. The execution times are 3744 for DGEFA and 21216 for DGESL. The time costs are therefore considered to be very large (probably more than 10%)

10. Concluding Remarks

We have implemented CATHARE code system during two months (February to March in 1986). We have finished most of the work. But the use of the code by JAERI research staff did not begin up to now. We hope this report is useful as a user guide of CATHARE code and its graphic systems at JAERI.

The manuals provided by CEA (see Appendix C) are written in French. The items of output lists, the comments in the program, and the commands and questions in conversational graphics are also written in French. As French language is not profound in Japan, therefore, the work for the CATHARE code implementation at JAERI has been processed in part with trial and error, and in part with the help in the translation of French by Mr. C. Chauliac.

Colour graphics DESSIN seems to have potentially high graphical functions including computer animation and so on. But how to use the system depends on user and depends on his French ability. If the tests for advanced colour graphic functions are required further, we will help them.

We are very much interesting in the speedup of the CATHARE code calculation on a vector processor FACOM VP-100 in JAERI. But it seems very difficult to get a good vector efficiency considered with the present code structure and coding style.

The CATHARE code is inprocess of modifications by the CATHARE team. So, we hope this report will also help future code maintenance.

Acknowledgements

We would like to express many thanks to CEA France for the use of CATHARE code in JAERI. Thank are also given to Mrs. M. Boulet of CEA Grenoble for her overall effort to the installation of CATHARE code at JAERI, and to Mr. B. Ranson of CEA Grenoble for his helpful work for the implementation of graphic systems.

We would like to very much appreciate the effort of Mr. C. Chauliac of CEA residents at JAERI for his French translation and his validation of the computed results of JAERI version from researcher's point of view. In particular, he helped us to test both classical and colour graphic systems, which includes the input data making, showing us how to answer the questions in conversational graphics. Without him, we could not accomplish our present work as smooth as this.

Thanks are also due to Mr. K. Okamoto of FUJITSU for measuring the computing time distributions over CATHARE subroutines.

We would also thank Mr. Y. Onuma of graphic specialist of JAERI and Mr. T. Yoshida of Kanazawa Computer Service for their help in the implementation of graphic systems at JAERI. Thanks are also expressed to Dr. Y. Kukita and Mr. K. Asai of JAERI, and Mr. C. Chauliac for their suggestions to improve the report including the revise of English in our draft.

References

(1) J.L. Nigon and J.C. Rousseau, The French Safety Code : CATHARE Basic Model, Constitutive Laws and Experimental Support, EDF-CEA-Framatome (Draft).

(2) M. Boulet and B. Ranson, Guide D'Installation du Code Cathare (Internal Communication).

Acknowledgements

We would like to express many thanks to CEA France for the use of CATHARE code in JAERI. Thank are also given to Mrs. M. Boulet of CEA Grenoble for her overall effort to the installation of CATHARE code at JAERI, and to Mr. B. Ranson of CEA Grenoble for his helpful work for the implementation of graphic systems.

We would like to very much appreciate the effort of Mr. C. Chauliac of CEA residents at JAERI for his French translation and his validation of the computed results of JAERI version from researcher's point of view. In particular, he helped us to test both classical and colour graphic systems, which includes the input data making, showing us how to answer the questions in conversational graphics. Without him, we could not accomplish our present work as smooth as this.

Thanks are also due to Mr. K. Okamoto of FUJITSU for measuring the computing time distributions over CATHARE subroutines.

We would also thank Mr. Y. Onuma of graphic specialist of JAERI and Mr. T. Yoshida of Kanazawa Computer Service for their help in the implementation of graphic systems at JAERI. Thanks are also expressed to Dr. Y. Kukita and Mr. K. Asai of JAERI, and Mr. C. Chauliac for their suggestions to improve the report including the revise of English in our draft.

References

(1) J.L. Nigon and J.C. Rousseau, The French Safety Code : CATHARE Basic Model, Constitutive Laws and Experimental Support, EDF-CEA-Framatome (Draft).

(2) M. Boulet and B. Ranson, Guide D'Installation du Code Cathare (Internal Communication).

Appendix A TSS Command Procedures

```
**************
** TEK411X  **
**************
          TEK411X 00000100  PROC 0  IN('J9303.#CATLGI.DATA') LM('J9303.GRAPH.LOAD') PNM(TEK411X)
          TEK411X 00000200  CONTROL MSG LIST NOFLUSH
          TEK411X 00000300      FREE DD(FT01F001 FT05F001 FT06F001)
          TEK411X 00000400      FREE ATTR(IN)
          TEK411X 00000500      ATTR IN INPUT
          TEK411X 00000600      ALLOC DD(FT01F001) DA('&IN') SHR US(IN)
          TEK411X 00000700      ALLOC DD(FT05F001) DA(*)
          TEK411X 00000800      ALLOC DD(FT06F001) DA(*)
          TEK411X 00000900      PTSIO
          TEK411X 00001000      CALL '&LM(&PNM)'
          TEK411X 00001100      FREEALL
          TEK411X 00001200      EXIT
```

```
***************
** ESOPE    **
***************
ESOPE 00010000  PROC 1 MEMB GENERE(@ESOPE.FORT77) SUITE(NO) IMP(YES) +
ESOPE 00020000   SEQ(NO) PODD(J9303.CATMAIN2.FORT77) INCLIB(J9303.P011.FORT77) +
ESOPE 00030000   PRESEQ(J9303)  LM(J9303.TRANS.LOAD)  CHAR(COMPLET)
ESOPE 00040000  CONTROL NOFLUSH MSG LIST
ESOPE 00050000  IF &SEQ=NO THEN DO
ESOPE 00060000              SET &INDD=&STR('&PODD.(&MEMB)')
ESOPE 00070000              END
ESOPE 00080000              ELSE IF &SEQ =YES THEN DO
ESOPE 00090000              SET &INDD=&STR('&PRESEQ..&MEMB')
ESOPE 00100000              END
ESOPE 00110000  WRITE
ESOPE 00120000  WRITE **** MOULINETTE ESOPE SUR LE FICHIER &INDD
ESOPE 00130000  WRITE **** MACHINE CIBLE(CRAY)
ESOPE 00140000  IF &STR(&SUITE) = YES THEN WRITE **** CARTESUITE AVEC SUITE
ESOPE 00150000  WRITE **** BIBLIOTHEQUE INCLIB '&INCLIB'
ESOPE 00160000  ERROR DO
ESOPE 00170000        WRITE *** ERREUR, &INDD N'EXISTE PAS ! ***
ESOPE 00180000        EXIT
ESOPE 00190000        END
ESOPE 00200000  ALLOC FI(FT05F001) DA(&INDD) REUSE
ESOPE 00210000  ERROR OFF
ESOPE 00220000  ALLOC FI(INCLIB) DA('&INCLIB') REUSE
ESOPE 00230000  ALLOC FI(FT06F001) DUMMY REUSE
ESOPE 00240000  IF &IMP NE YES  THEN GOTO  LA
ESOPE 00250000  LECT2: WRITENR IMPRESSION DE LA LISTE(IMP,TER,SYS OU DMY) ===>
ESOPE 00260000  READ R
ESOPE 00270000  IF &R=IMP THEN DO
ESOPE 00280000            WRITENR DESTINATION(GTT,......) ===>
ESOPE 00290000            READ DEST
ESOPE 00300000            ALLOC FI(FT06F001) SYSOUT(A) DEST(&DEST) REUSE
ESOPE 00310000            END
ESOPE 00320000  ELSE DO
ESOPE 00330000       IF &R=TER THEN ALLOC FI(FT06F001) DA(*) REUSE
ESOPE 00340000       ELSE DO
ESOPE 00350000         IF &R=DMY THEN ALLOC FI(FT06F001) DUMMY REUSE
ESOPE 00360000              ELSE DO
ESOPE 00370000                IF &R=SYS THEN ALLOC FI(FT06F001) SYSOUT(S) REUSE
ESOPE 00380000                   ELSE DO
ESOPE 00390000                        WRITE EH! EH! A REFAIRE ***
ESOPE 00400000                        GOTO LECT2
ESOPE 00410000                        END
ESOPE 00420000                   END
ESOPE 00430000            END
ESOPE 00440000        END
ESOPE 00450000  LA: DELETE &GENERE
ESOPE 00460000  FREE ATTRLIST(A)
ESOPE 00470000  ATTRIB A LR(80) BL(3120) REC(F B)
ESOPE 00480000  DELETE ##TEMPO
ESOPE 00490000  ERROR DO
ESOPE 00500000  ERROR OFF
ESOPE 00510000        WRITE *** ERREUR,ESOPE EST IMPOSSIBLE ***
ESOPE 00520000        GOTO FIN
ESOPE 00530000        END
ESOPE 00540000  ALLOC FI(FT01F001) DA(##TEMPO) SP(50,50) US(A) TR REUSE
ESOPE 00550000  ERROR OFF
ESOPE 00560001   CALL '&LM(ESOPE)' 'FORT=IBM,FORT77,CHAR=&CHAR'
ESOPE 00570000  IF &LASTCC NE 0 THEN DO
ESOPE 00580000                WRITE *** ERREUR A L'ETAPE ESOPE ***
ESOPE 00590000                GOTO FIN1
ESOPE 00600000                END
ESOPE 00610000  WRITE ESOPE CORRECT (I.E. LASTCC = 0)
ESOPE 00620000  IF &STR(&SUITE) NE &STR(YES) THEN GOTO FIN1
ESOPE 00630000  ALLOC FI(FT16F001) DA(&GENERE) SP(2,20) US(A) TR REUSE
ESOPE 00640000  CALL 'J9303.TRANS.LOAD(SUITE)'
ESOPE 00650000  SET &CODE = &LASTCC
ESOPE 00660000  IF &CODE > 4 THEN DO
ESOPE 00670000               WRITE *** ERREUR A L'ETAPE SUITE COND CODE = &CODE ***
ESOPE 00680000               GOTO FIN1
ESOPE 00690000               END
ESOPE 00700000  WRITE SUITE CORRECT (I.E. LASTCC < OU = 4 )
ESOPE 00710000  GOTO FIN
ESOPE 00720000  FIN1: RENAME ##TEMPO &GENERE
ESOPE 00730000  FIN: WRITE  LE FORTRAN GENERE SE TROUVE SUR LE FICHIER &GENERE
ESOPE 00740000  FREE FI(FT01F001,FT05F001,FT06F001,FT16F001,A,INCLIB)
ESOPE 00750000  DELETE ##TEMPO
```

```
***************
** CREE     **
***************
CREE 00000100  PROC 1 MEMB  LM('J9303.TRANS.LOAD') PNM(CREE)  +
CREE 00000200               IN('J9303.P010.FORT77')  OUTSOC('J9303.CATMAIN.FORT77')  +
CREE 00000300               OUTDATA('J9303.CATMAIN.DATA')
CREE 00000400  CONTROL NOFLUSH NOMSG
CREE 00000500  WRITE  EDITION DE &OUTSOC(&MEMB)
CREE 00000600  WRITE       ET DE &OUTDATA(&MEMB)
CREE 00000700  WRITE       A PARTIR DE &IN(&MEMB)
CREE 00000800  FREE FI(FT05F001 FT06F001 FT08F001 FT10F001)
CREE 00000900  ALLOC FI(FT05F001) DA('&IN(&MEMB)')
CREE 00001000  ALLOC FI(FT06F001) DA(*)
CREE 00001100  ALLOC FI(FT08F001) DA('&OUTDATA(&MEMB)')
CREE 00001200  ALLOC FI(FT10F001) DA('&OUTSOC(&MEMB)')
CREE 00001300  CALL '&LM(&PNM)'
CREE 00001400  FREE FI(FT05F001,FT06F001,FT08F001,FT10F001)
CREE 00001500  ALLOC DD(FT05F001) DA(*)
CREE 00001600  ALLOC DD(FT06F001) DA(*)
CREE 00001700  END
```

```
***************
** TEK4014  **
***************
TEK4014 00000100  PROC 0  IN('J9303.#CATLGI.DATA') LM('J9303.GRAPH.LOAD') PNM(TEK4014)
TEK4014 00000200  CONTROL MSG LIST NOFLUSH
TEK4014 00000300      FREE DD(FT01F001 FT05F001 FT06F001)
TEK4014 00000400      FREE ATTR(IN)
TEK4014 00000500      ATTR IN INPUT
TEK4014 00000600      ALLOC DD(FT01F001) DA('&IN') SHR US(IN)
TEK4014 00000700      ALLOC DD(FT05F001) DA(*)
TEK4014 00000800      ALLOC DD(FT06F001) DA(*)
TEK4014 00000900      PTSIO
TEK4014 00001000      CALL '&LM(&PNM)'
TEK4014 00001100      FREEALL
TEK4014 00001200      EXIT
```

```
***************
** TRACE    **
***************
TRACE 00000100  PROC 1 MEM IN('J9303.#CATFT11.DATA') OUT('J9303.#CATLGI.DATA')  +
TRACE 00000200          SYSIN('J9303.P017.FORT77') LM('J9303.GRAPH.LOAD')  +
TRACE 00000300          PNM(TRACE)
TRACE 00000400  CONTROL LIST MSG NOFLUSH
TRACE 00000500      FREE  ATTR(IN)
TRACE 00000600      FREE  DD(FT05F001 FT11F001 FT13F001)
TRACE 00000700      ATTR  IN INPUT
TRACE 00000800      DELETE '&OUT'
TRACE 00000900      ALLOC DD(FT11F001) DA('&IN') SHR US(IN) REU
TRACE 00001000      ALLOC DD(FT13F001) DA('&OUT') SP(100 10) T NEW CAT UNIT(TSSWK)  +
TRACE 00001100            RELEASE REU
TRACE 00001200      ALLOC DD(FT05F001) DA('&SYSIN(&MEM)') SHR US(IN) REU
TRACE 00001300      CALL '&LM(&PNM)'
TRACE 00001400      FREEALL
TRACE 00001500      EXIT
```

```
KEQ52800I  J1648.TSSMAC.CLIST(EXTRACT)
      PROC 0
      CONTROL NOMSG
      WRITE ===== CONTRACTION DE FICHIER GRAPHIQUE CATHARE =====
      FREE F(FT05F001,FT06F001,FT09F001,FT10F001)
      FREE ATTR(DCB)
      ATTR DCB LRECL(80) BLKSIZE(80) RECFM(F)
      ALLOC DA(*) F(FT05F001) USING(DCB)
      FREE ATTR(DCB)
      ALLOC DA(*) F(FT06F001)
      CALL 'J1648.AEXTRACT.LOAD(TEMPNAME)'
      FREE F(FT05F001,FT06F001,FT09F001,FT10F001)
      WRITE ===== FIN DE VISUALISATION =====
           END
```

```
KEQ52800I  J1648.TSSMAC.CLIST(DESSIN)
      PROC 0
      CONTROL NOMSG
      WRITE ===== PROCEDURE DE VISUALISATION CATHARE =====
      FREE F(FT05F001,FT06F001,FT08F001)
      FREE F(FT09F001,FT10F001)
      FREE ATTR(DCB)
      ATTR DCB LRECL(80) BLKSIZE(80) RECFM(F)
      ALLOC DA(*) F(FT05F001) USING(DCB)
      FREE ATTR(DCB)
      ALLOC DA(*) F(FT06F001)
      ALLOC DA(*) F(SYSOUT)
      FREE ATTR(BCD)
      ATTR  BCD  BLKSIZE(137) LRECL(133) RECFM(V A)
      ALLOC F(FT08F001) SYSOUT(A) US(BCD)
      FREE ATTR(BCD)
      PROF NOINTERCOM
      CALL 'J1648.AVOIR.LOAD(TEMPNAME)'
      PROF INTERCOM
      FREE F(FT05F001,FT06F001,FT08F001)
      WRITE ===== FIN DE VISUALISATION =====
           END
```

Appendix B Directory List of the Delivered Files

DIRECTORY LIST OF J9303.JAERITRA.ESOPE

	MEMBER NAME	PAGE NO.	NO. OF CARDS
(NO.=001)	IBLB	0001	23
(NO.=002)	IBLBLOC	0002	20
(NO.=003)	IBLS	0003	28
(NO.=004)	IBLV	0004	89
(NO.=005)	ILCACOM	0006	14
(NO.=006)	ILCACOM	0007	26
(NO.=007)	ILCSCOM	0008	10
(NO.=008)	ILDCCOM	0009	41
(NO.=009)	ILEDCOM	0010	16
(NO.=010)	ILERCOM	0011	10
(NO.=011)	ILHDCOM	0012	23
(NO.=012)	ILINCOM	0013	18
(NO.=013)	ILKDCOM	0014	23
(NO.=014)	ILKXCOM	0015	20
(NO.=015)	ILKYCOM	0016	11
(NO.=016)	ILLDATE	0017	2
(NO.=017)	ILLUCOM	0018	15
(NO.=018)	ILMACOM	0019	16
(NO.=019)	ILNICOM	0020	8
(NO.=020)	ILNVCOM	0021	8
(NO.=021)	ILPICOM	0022	11
(NO.=022)	ILPJCOM	0023	11
(NO.=023)	ILPNCOM	0024	16
(NO.=024)	ILPOCOM	0025	10
(NO.=025)	ILRCCOM	0026	14
(NO.=026)	ILSGCOM	0027	10
(NO.=027)	ILSPCOM	0028	39
(NO.=028)	ILSYCOM	0029	18
(NO.=029)	ILTICOM	0030	16
(NO.=030)	ILTYCOM	0031	12
(NO.=031)	ILVRCOM	0032	9
(NO.=032)	LBSYM	0033	47
(NO.=033)	LCEGAI	0034	48
(NO.=034)	LDECL	0035	170
(NO.=035)	LDEP	0039	128
(NO.=036)	LDIAG	0042	98
(NO.=037)	LECCRT	0044	291
(NO.=038)	LECINS	0050	107
(NO.=039)	LEDIT	0053	82
(NO.=040)	LEDIT1	0055	46
(NO.=041)	LEXC	0056	151
(NO.=042)	LEXCAS	0059	368
(NO.=043)	LEXDO	0066	252
(NO.=044)	LEXIF1	0071	396
(NO.=045)	LEXINS	0079	88
(NO.=046)	LEXMAC	0081	243
(NO.=047)	LEXMC1	0086	67
(NO.=048)	LEXPA	0088	375
(NO.=049)	LEXPB	0095	48
(NO.=050)	LEXPC	0096	96
(NO.=051)	LEXPK	0098	77
(NO.=052)	LEXPR	0100	44
(NO.=053)	LEXTEN	0101	309
(NO.=054)	LIMPLI	0107	90
(NO.=055)	LINST	0109	531
(NO.=056)	LINTOT	0119	508
(NO.=057)	LNEXS	0129	108
(NO.=058)	LNEXT	0132	535
(NO.=059)	LNXPAR	0142	35
(NO.=060)	LNXTRM	0143	48
(NO.=061)	LPCENT	0144	167
(NO.=062)	LPVI	0148	81
(NO.=063)	LSEGCX	0150	466
(NO.=064)	LSEGEG	0159	127

(NO.=065)	LSEGM	0162	339
(NO.=066)	LSEGM1	0169	257
(NO.=067)	LSEGM2	0174	254
(NO.=068)	LSEGP	0179	59
(NO.=069)	LSEGPN	0181	205
(NO.=070)	LSEGTX	0185	113
(NO.=071)	LSEGXX	0188	99
(NO.=072)	LSGDIM	0190	75
(NO.=073)	LSGDI1	0192	26
(NO.=074)	LSGEDA	0193	41
(NO.=075)	LSGEDL	0194	51
(NO.=076)	LSGED1	0196	109
(NO.=077)	LSGTYP	0199	57
(NO.=078)	LSMAC	0201	331
(NO.=079)	LTSYM	0208	68
(NO.=080)	LUINS	0210	225
(NO.=081)	LUTERM	0215	350
(NO.=082)	LVAR	0222	286
(NO.=083)	LXCALL	0228	107
(NO.=084)	LXTYP	0231	104
(NO.=085)	LXTYP1	0233	84
(NO.=086)	LXTYP2	0235	54
(NO.=087)	LXTYP3	0237	38
(NO.=088)	MAIN	0238	314

			10460 CARDS

DIRECTORY LIST OF J9303.JAERITRA.FORT77

	MEMBER NAME	PAGE NO.	NO. OF CARDS
(NO.=001)	ESOPV5	0001	311
(NO.=002)	LBSYM	0007	80
(NO.=003)	LCEGAI	0009	36
(NO.=004)	LDECL	0010	345
(NO.=005)	LDEP	0017	183
(NO.=006)	LDIAG	0021	85
(NO.=007)	LECCRT	0023	195
(NO.=008)	LECINS	0027	127
(NO.=009)	LEDIT	0030	116
(NO.=010)	LEDIT1	0033	61
(NO.=011)	LEXC	0035	219
(NO.=012)	LEXCAS	0040	484
(NO.=013)	LEXDO	0049	379
(NO.=014)	LEXIF1	0056	490
(NO.=015)	LEXINS	0065	133
(NO.=016)	LEXMAC	0068	347
(NO.=017)	LEXMC1	0075	100
(NO.=018)	LEXPA	0077	558
(NO.=019)	LEXPB	0088	63
(NO.=020)	LEXPC	0090	124
(NO.=021)	LEXPK	0093	125
(NO.=022)	LEXPR	0096	69
(NO.=023)	LEXTEN	0098	405
(NO.=024)	LIMPLI	0106	114
(NO.=025)	LINST	0109	394
(NO.=026)	LINTOT	0117	572
(NO.=027)	LNEXS	0128	105
(NO.=028)	LNEXT	0130	529
(NO.=029)	LNXPAR	0140	56
(NO.=030)	LNXTRM	0142	80
(NO.=031)	LPCENT	0144	117
(NO.=032)	LPVI	0147	98
(NO.=033)	LSEGCX	0149	660
(NO.=034)	LSEGEG	0162	165
(NO.=035)	LSEGM	0166	387
(NO.=036)	LSEGM1	0174	277
(NO.=037)	LSEGM2	0180	383
(NO.=038)	LSEGP	0188	79
(NO.=039)	LSEGPN	0190	273
(NO.=040)	LSEGTX	0196	207
(NO.=041)	LSEGXX	0200	113
(NO.=042)	LSGDIM	0203	96
(NO.=043)	LSGDI1	0205	52
(NO.=044)	LSGEDA	0207	57
(NO.=045)	LSGEDL	0209	79
(NO.=046)	LSGED1	0211	167
(NO.=047)	LSGTYP	0215	82
(NO.=048)	LSMAC	0217	455
(NO.=049)	LTSYM	0226	102
(NO.=050)	LUINS	0228	322
(NO.=051)	LUTERM	0234	457
(NO.=052)	LVAR	0243	322
(NO.=053)	LXCALL	0249	174
(NO.=054)	LXTYP	0253	112
(NO.=055)	LXTYP1	0256	88
(NO.=056)	LXTYP2	0258	62
(NO.=057)	LXTYP3	0260	45
			12316 CARDS

DIRECTORY LIST OF J9303.JAERIGEM.ESOPE

	MEMBER NAME	PAGE NO.	NO. OF CARDS
(NO.=001)	ADDADD	0001	209
(NO.=002)	ADDMEMB	0005	70
(NO.=003)	ADDSUB	0007	114
(NO.=004)	ADDWHAT	0010	303
(NO.=005)	ALZDATE	0016	100
(NO.=006)	ALZHEUR	0018	41
(NO.=007)	A000ZFM	0019	53
(NO.=008)	A000ZGM	0021	83
(NO.=009)	A000ZPM	0023	55
(NO.=010)	IOOADR	0025	90
(NO.=011)	IOOADZ	0027	60
(NO.=012)	IOODATE	0029	3
(NO.=013)	IOODES	0030	361
(NO.=014)	IOODMP	0037	15
(NO.=015)	IOOPBUF	0038	15
(NO.=016)	IOOPTRK	0039	20
(NO.=017)	IOOSGM	0040	126
(NO.=018)	IOOSRE	0043	38
(NO.=019)	IOOTF1	0044	11
(NO.=020)	IOOTF2	0045	28
(NO.=021)	IOOTRO	0046	62
(NO.=022)	IOOUNIT	0048	9
(NO.=023)	IOOVAL	0049	19
(NO.=024)	IOOVEG	0050	18
(NO.=025)	OOCASE	0051	15
(NO.=026)	OOOABE	0052	16
(NO.=027)	OOOADG	0053	302
(NO.=028)	OOODEX	0059	120
(NO.=029)	OOODLB	0062	26
(NO.=030)	OOODMP	0063	254
(NO.=031)	OOODMS	0068	108
(NO.=032)	OOODOP	0071	54
(NO.=033)	OOODRO	0073	36
(NO.=034)	OOODWD	0074	65
(NO.=035)	OOOERR	0076	47
(NO.=036)	OOOETA	0077	57
(NO.=037)	OOOFIX	0079	67
(NO.=038)	OOOLIS	0081	53
(NO.=039)	OOOMAP	0083	9
(NO.=040)	OOOMIN	0084	186
(NO.=041)	OOOMOP	0088	97
(NO.=042)	OOOMRD	0090	121
(NO.=043)	OOOMRU	0093	77
(NO.=044)	OOOMSU	0095	119
(NO.=045)	OOOMTA	0098	42
(NO.=046)	OOOMTX	0099	100
(NO.=047)	OOOMWD	0101	227
(NO.=048)	OOOMWF	0106	76
(NO.=049)	OOOPOS	0108	48
(NO.=050)	OOOPRM	0109	111
(NO.=051)	OOORES	0112	135
(NO.=052)	OOOSAV	0115	131
(NO.=053)	OOOSEG	0118	370
(NO.=054)	OOOSSG	0125	44
(NO.=055)	OOOSUG	0126	58
(NO.=056)	OOOSUS	0128	74
(NO.=057)	OOOSUW	0130	76
(NO.=058)	OOOVAL	0132	163
(NO.=059)	OOOVEG	0136	55
(NO.=060)	OOOWBU	0138	52
(NO.=061)	OOOXDS	0140	28
(NO.=062)	OOOXLN	0141	65
(NO.=063)	OOOXMV	0143	97
(NO.=064)	OOOXTN	0145	9
(NO.=065)	OOOXTR	0146	102
(NO.=066)	OOOYAC	0148	148
(NO.=067)	OOOYAD	0151	380
(NO.=068)	OOOYA1	0158	62

(NO.=069)	000YDE	0160	194
(NO.=070)	000YIN	0164	91
(NO.=071)	000YI1	0166	128
(NO.=072)	000YNF	0169	91
(NO.=073)	000YSU	0171	109
(NO.=074)	000YTN	0174	250
(NO.=075)	000ZMR	0179	13
(NO.=076)	000ZMV	0180	13
(NO.=077)	000ZOP	0181	78
(NO.=078)	000ZZA	0183	16
(NO.=079)	000ZZB	0184	23
(NO.=080)	000ZZC	0185	19
(NO.=081)	000ZZ1	0186	16
(NO.=082)	000ZZ2	0187	25
(NO.=083)	000ZZ3	0188	47
(NO.=084)	000ZZ4	0189	44
(NO.=085)	000ZZ5	0190	23
(NO.=086)	000ZZ6	0191	82
(NO.=087)	000ZZ7	0193	19
(NO.=088)	00SVAL	0194	64
			7730 CARDS

DIRECTORY LIST OF J9303.JAERIGEM.FORT77

	MEMBER NAME	PAGE NO.	NO. OF CARDS
(NO.=001)	00CASE	0001	6
(NO.=002)	000ABE	0002	4
(NO.=003)	000ADG	0003	412
(NO.=004)	000DEX	0011	105
(NO.=005)	000DLB	0013	23
(NO.=006)	000DMP	0014	250
(NO.=007)	000DMS	0019	78
(NO.=008)	000DOP	0021	43
(NO.=009)	000DRD	0022	36
(NO.=010)	000DWD	0023	70
(NO.=011)	000ERR	0025	31
(NO.=012)	000ETA	0026	53
(NO.=013)	000FIX	0028	95
(NO.=014)	000LIS	0030	61
(NO.=015)	000MAP	0032	5
(NO.=016)	000MIN	0033	174
(NO.=017)	000MOP	0037	88
(NO.=018)	000MRD	0039	161
(NO.=019)	000MRU	0043	111
(NO.=020)	000MSU	0046	172
(NO.=021)	000MTA	0050	36
(NO.=022)	000MTX	0051	72
(NO.=023)	000MWD	0053	237
(NO.=024)	000MWF	0058	86
(NO.=025)	000POS	0060	24
(NO.=026)	000PRM	0061	64
(NO.=027)	000RES	0063	110
(NO.=028)	000SAV	0066	129
(NO.=029)	000SEG	0069	235
(NO.=030)	000SSG	0074	32
(NO.=031)	000SUG	0075	59
(NO.=032)	000SUS	0077	103
(NO.=033)	000SUW	0079	87
(NO.=034)	000VAL	0081	165
(NO.=035)	000VEG	0085	48
(NO.=036)	000WBU	0086	65
(NO.=037)	000XDS	0088	25
(NO.=038)	000XLN	0089	25
(NO.=039)	000XMV	0090	105
(NO.=040)	000XTN	0092	4
(NO.=041)	000XTR	0093	101
(NO.=042)	000YAC	0095	199
(NO.=043)	000YAD	0099	198
(NO.=044)	000YA1	0103	63
(NO.=045)	000YDE	0105	243
(NO.=046)	000YIN	0110	89
(NO.=047)	000YI1	0112	193
(NO.=048)	000YNF	0116	90
(NO.=049)	000YSU	0118	94
(NO.=050)	000YTN	0120	249
(NO.=051)	000ZMR	0125	9
(NO.=052)	000ZMV	0126	9
(NO.=053)	000ZOP	0127	39
(NO.=054)	000ZZA	0128	14
(NO.=055)	000ZZB	0129	8
(NO.=056)	000ZZC	0130	7
(NO.=057)	000ZZ1	0131	6
(NO.=058)	000ZZ2	0132	6
(NO.=059)	000ZZ3	0133	15
(NO.=060)	000ZZ4	0134	6
(NO.=061)	000ZZ5	0135	5
(NO.=062)	000ZZ6	0136	57
(NO.=063)	000ZZ7	0138	6
(NO.=064)	00SVAL	0139	60
			5455 CARDS

DIRECTORY LIST OF J9303.JAERISYS.ESOPE

	MEMBER NAME	PAGE NO.	NO. OF CARDS
(NO.=001)	ACCU	0001	170
(NO.=002)	ADZADJ	0005	233
(NO.=003)	ALOCOM	0010	141
(NO.=004)	BDISK	0013	93
(NO.=005)	BILINI	0015	73
(NO.=006)	BILMAS	0017	277
(NO.=007)	BRA	0023	593
(NO.=008)	BRAGDI	0034	47
(NO.=009)	BRANCH	0035	166
(NO.=010)	BRECHE	0039	202
(NO.=011)	CINEDI	0043	83
(NO.=012)	CINELU	0045	302
(NO.=013)	CIRCDI	0051	179
(NO.=014)	CIRCLU	0055	583
(NO.=015)	COEURa	0066	57
(NO.=016)	COULE	0068	312
(NO.=017)	CTRPEN	0074	149
(NO.=018)	CUTHIL	0077	188
(NO.=019)	DONNEE	0081	58
(NO.=020)	ECVAR	0083	503
(NO.=021)	EDA	0093	8
(NO.=022)	EQUIDI	0094	51
(NO.=023)	GEOa	0096	2
(NO.=024)	GEOBRAa	0097	3
(NO.=025)	GEOMDI	0098	70
(NO.=026)	GEOMLU	0100	58
(NO.=027)	GEOTEPa	0102	3
(NO.=028)	GEOVOLa	0103	5
(NO.=029)	GOPERM	0104	495
(NO.=030)	GOREST	0114	161
(NO.=031)	GOSAUV	0118	186
(NO.=032)	GOSEG	0122	72
(NO.=033)	GOTRAN	0124	473
(NO.=034)	GV	0133	325
(NO.=035)	GVALIM	0139	280
(NO.=036)	GVAX	0145	500
(NO.=037)	GVBREC	0155	127
(NO.=038)	GVDISK	0158	210
(NO.=039)	GVLU	0162	934
(NO.=040)	GVMDI	0180	200
(NO.=041)	GVSGEOa	0184	12
(NO.=042)	GVSLOGa	0185	13
(NO.=043)	GVSPERa	0186	16
(NO.=044)	GVSSOUa	0187	41
(NO.=045)	GVSUTIa	0188	9
(NO.=046)	GVSVARa	0189	15
(NO.=047)	GVS12a	0190	26
(NO.=048)	HDISK	0191	332
(NO.=049)	HEXI	0198	566
(NO.=050)	HEXIGV	0209	980
(NO.=051)	HJAC	0227	300
(NO.=052)	HSECRI	0233	56
(NO.=053)	H3LCaB	0235	11
(NO.=054)	H3LCaH	0236	4
(NO.=055)	H3NOa	0237	28
(NO.=056)	H3PAa	0238	8
(NO.=057)	H3REaB	0239	9
(NO.=058)	H3REaH	0240	2
(NO.=059)	H3REaT	0241	4
(NO.=060)	H3REaV	0242	10
(NO.=061)	H3SUa	0243	4
(NO.=062)	INTERP	0244	21
(NO.=063)	JACOBE	0245	180
(NO.=064)	JACOBIa	0249	5
(NO.=065)	JDISK	0250	150
(NO.=066)	JONTYP	0253	58
(NO.=067)	KELGRI	0255	80
(NO.=068)	KICE	0257	34

(NO.=069)	LIMITE	0258	213
(NO.=070)	LIVAR	0262	549
(NO.=071)	LOCAT	0273	35
(NO.=072)	LOGARI	0274	59
(NO.=073)	LOGOS@	0276	38
(NO.=074)	MAIL@	0277	29
(NO.=075)	MAILDI	0278	49
(NO.=076)	MAILLU	0279	42
(NO.=077)	MAS@	0280	1
(NO.=078)	METAL@	0281	88
(NO.=079)	METVOL@	0283	5
(NO.=080)	MODIF	0284	347
(NO.=081)	MODON@	0291	1
(NO.=082)	NORME	0292	15
(NO.=083)	OUVERT	0293	280
(NO.=084)	PCRIDI	0299	74
(NO.=085)	PODIP	0301	176
(NO.=086)	POMPAL	0305	75
(NO.=087)	POMPDI	0307	89
(NO.=088)	POMPE	0309	554
(NO.=089)	POMPLU	0320	567
(NO.=090)	PORTE	0331	151
(NO.=091)	POWER	0334	128
(NO.=092)	PPRINT	0337	228
(NO.=093)	PSCHIT	0342	364
(NO.=094)	PSDISK	0349	57
(NO.=095)	PSLANC	0351	147
(NO.=096)	PUITS	0354	291
(NO.=097)	RANGE	0360	138
(NO.=098)	RAZ	0363	39
(NO.=099)	RAZ1	0364	54
(NO.=100)	REACTI	0366	245
(NO.=101)	REMAIL	0371	477
(NO.=102)	RG	0380	514
(NO.=103)	RMAIL	0390	417
(NO.=104)	RMASOU	0398	50
(NO.=105)	SCRAM	0399	57
(NO.=106)	SEGDI	0401	544
(NO.=107)	SEGPER	0411	17
(NO.=108)	SELEMP@	0412	3
(NO.=109)	SINCOP	0413	21
(NO.=110)	SOURCEB@	0414	7
(NO.=111)	SOURCEP@	0415	78
(NO.=112)	SPERMA@	0417	27
(NO.=113)	SYSLIN	0418	100
(NO.=114)	TE	0420	416
(NO.=115)	TEDISK	0428	53
(NO.=116)	TEP	0430	124
(NO.=117)	TEPGDI	0433	33
(NO.=118)	TITRE	0434	126
(NO.=119)	TOPODI	0437	68
(NO.=120)	TOPOLU	0439	561
(NO.=121)	TOPOS@	0450	20
(NO.=122)	TOUR	0451	198
(NO.=123)	TRANSF	0455	239
(NO.=124)	TUYAU	0460	78
(NO.=125)	TUYGDI	0462	40
(NO.=126)	TUYMAI	0463	349
(NO.=127)	TUYMDI	0470	127
(NO.=128)	UTION	0473	92
(NO.=129)	VARADJ@	0475	21
(NO.=130)	VAREX@	0476	24
(NO.=131)	VARIP@	0477	8
(NO.=132)	VART@	0478	17
(NO.=133)	VDISK	0479	112
(NO.=134)	VERIFI	0482	17
(NO.=135)	VOL	0483	604
(NO.=136)	VOLGDI	0495	52
(NO.=137)	VOLMAI	0497	103
(NO.=138)	VOLUME	0499	244
(NO.=139)	WALLC	0504	312
(NO.=140)	WALLP	0510	583

			23607 CARDS

DIRECTORY LIST OF J9303.JAERISYS.FORT77

	MEMBER NAME	PAGE NO.	NO. OF CARDS
(NO.=001)	ACCU	0001	317
(NO.=002)	ADZADJ	0007	333
(NO.=003)	ALOCOM	0014	121
(NO.=004)	BDISK	0017	34
(NO.=005)	BILINI	0018	83
(NO.=006)	BILMAS	0020	417
(NO.=007)	BRA	0028	1448
(NO.=008)	BRAGDI	0055	86
(NO.=009)	BRANCH	0057	232
(NO.=010)	BRECHE	0062	307
(NO.=011)	CINEDI	0068	105
(NO.=012)	CINELU	0070	436
(NO.=013)	CIRCDI	0079	269
(NO.=014)	CIRCLU	0084	757
(NO.=015)	COULE	0098	447
(NO.=016)	CTRPEN	0107	171
(NO.=017)	CUTHIL	0111	125
(NO.=018)	DONNEE	0114	67
(NO.=019)	ECVAR	0116	570
(NO.=020)	EDA	0127	6
(NO.=021)	EQUIDI	0128	59
(NO.=022)	GEOMDI	0130	95
(NO.=023)	GEOMLU	0132	66
(NO.=024)	GOPERM	0134	750
(NO.=025)	GOREST	0148	198
(NO.=026)	GOSAUV	0152	208
(NO.=027)	GOSEG	0156	135
(NO.=028)	GOTRAN	0159	548
(NO.=029)	GV	0170	347
(NO.=030)	GVALIM	0177	530
(NO.=031)	GVAX	0187	748
(NO.=032)	GVBREC	0201	199
(NO.=033)	GVDISK	0205	82
(NO.=034)	GVLU	0207	1280
(NO.=035)	GVMDI	0231	301
(NO.=036)	HDISK	0237	538
(NO.=037)	HEXI	0247	1709
(NO.=038)	HEXIGV	0279	2676
(NO.=039)	HJAC	0328	663
(NO.=040)	HSECRI	0341	89
(NO.=041)	INTERP	0343	19
(NO.=042)	JACOBE	0344	269
(NO.=043)	JDISK	0349	48
(NO.=044)	JONTYP	0350	60
(NO.=045)	KELGRI	0352	118
(NO.=046)	KICE	0355	37
(NO.=047)	LIMITE	0356	204
(NO.=048)	LIVAR	0360	566
(NO.=049)	LOCAT	0371	27
(NO.=050)	LOGARI	0372	68
(NO.=051)	MAILDI	0374	74
(NO.=052)	MAILLU	0376	50
(NO.=053)	MODIF	0377	358
(NO.=054)	NORME	0384	17
(NO.=055)	OUVERT	0385	628
(NO.=056)	PCHIDI	0397	138
(NO.=057)	PODIP	0400	138
(NO.=058)	POMPAL	0403	99
(NO.=059)	POMPDI	0405	126
(NO.=060)	POMPE	0408	1698
(NO.=061)	POMPLU	0439	686
(NO.=062)	PORTE	0452	228
(NO.=063)	POWER	0457	171
(NO.=064)	PPRINT	0461	468
(NO.=065)	PSCHIT	0470	439
(NO.=066)	PSDISK	0479	20
(NO.=067)	PSLANC	0480	324
(NO.=068)	PUITS	0486	396

(NO.=069)	RANGE	0494	223
(NO.=070)	RAZ	0499	36
(NO.=071)	RAZ1	0500	42
(NO.=072)	REACTI	0501	405
(NO.=073)	REMAIL	0509	1073
(NO.=074)	RG	0529	997
(NO.=075)	RMAIL	0548	776
(NO.=076)	RMASOU	0563	74
(NO.=077)	SCRAM	0565	53
(NO.=078)	SEGDI	0567	710
(NO.=079)	SEGPER	0580	12
(NO.=080)	SINCOP	0581	35
(NO.=081)	SYSLIN	0582	85
(NO.=082)	TE	0584	1011
(NO.=083)	TEDISK	0603	18
(NO.=084)	TEP	0604	184
(NO.=085)	TEPGDI	0608	79
(NO.=086)	TITRE	0610	121
(NO.=087)	TOPODI	0613	119
(NO.=088)	TOPOLU	0616	955
(NO.=089)	TOUR	0634	327
(NO.=090)	TRANSF	0641	343
(NO.=091)	TUYAU	0648	129
(NO.=092)	TUYGDI	0651	75
(NO.=093)	TUYMAI	0653	783
(NO.=094)	TUYMDI	0668	246
(NO.=095)	UTION	0673	68
(NO.=096)	VDISK	0675	35
(NO.=097)	VERIFI	0676	16
(NO.=098)	VOL	0677	1570
(NO.=099)	VOLGDI	0706	95
(NO.=100)	VOLMAI	0708	252
(NO.=101)	VOLUME	0713	393
(NO.=102)	WALLC	0721	502
(NO.=103)	WALLP	0731	872

			37740 CARDS

DIRECTORY LIST OF J9303.JAERIMOD.FORT77

	MEMBER NAME	PAGE NO.	NO. OF CARDS
(NO.=001)	BECRIT	0001	100
(NO.=002)	BEFPAT	0003	648
(NO.=003)	BELIM	0015	62
(NO.=004)	BINIT	0017	100
(NO.=005)	BJAC	0019	104
(NO.=006)	BJACOB	0021	562
(NO.=007)	BJOURT	0032	90
(NO.=008)	BPERMA	0034	170
(NO.=009)	BVAR	0038	198
(NO.=010)	BVARP	0042	131
(NO.=011)	BXKELA	0045	18
(NO.=012)	BXKRET	0046	17
(NO.=013)	CODIUO	0047	19
(NO.=014)	COMBU2	0048	112
(NO.=015)	COMBU3	0051	55
(NO.=016)	COMBU4	0053	67
(NO.=017)	COMBU5	0055	114
(NO.=018)	COMBU6	0058	333
(NO.=019)	COMBU7	0065	36
(NO.=020)	COMBU8	0066	112
(NO.=021)	CONDUO	0069	159
(NO.=022)	CORP	0072	395
(NO.=023)	GVBASC	0080	743
(NO.=024)	GVBETA	0094	181
(NO.=025)	GVBFA	0098	167
(NO.=026)	GVBSCU	0102	45
(NO.=027)	GVBSL5	0103	86
(NO.=028)	GVCAV	0105	428
(NO.=029)	GVECRI	0113	222
(NO.=030)	GVEVOL	0118	528
(NO.=031)	GVHIER	0128	40
(NO.=032)	GVION1	0129	195
(NO.=033)	GVION2	0133	185
(NO.=034)	GVJOUR	0137	39
(NO.=035)	GVMEI	0138	804
(NO.=036)	GVMOY	0153	70
(NO.=037)	GVNIV	0155	78
(NO.=038)	GVPAR	0157	177
(NO.=039)	GVPAR1	0161	171
(NO.=040)	GVPAR3	0165	37
(NO.=041)	GVPERM	0166	329
(NO.=042)	GVPER1	0173	600
(NO.=043)	GVPER2	0184	553
(NO.=044)	GVRAZ	0195	72
(NO.=045)	GVSOUR	0197	175
(NO.=046)	GVVAR	0201	278
(NO.=047)	HA	0207	101
(NO.=048)	HACCU	0209	97
(NO.=049)	HARSOR	0211	23
(NO.=050)	HBALRO	0212	42
(NO.=051)	HBASCU	0213	212
(NO.=052)	HBRECH	0217	215
(NO.=053)	HCONTE	0221	250
(NO.=054)	HEFENT	0226	83
(NO.=055)	HEFSOR	0228	81
(NO.=056)	HEJECT	0230	19
(NO.=057)	HELIM	0231	702
(NO.=058)	HIMPEF	0244	223
(NO.=059)	HINJEC	0249	35
(NO.=060)	HJACOB	0250	334
(NO.=061)	HJOURP	0257	114
(NO.=062)	HJOURT	0260	130
(NO.=063)	HMOMEN	0263	219
(NO.=064)	HPARGV	0268	30
(NO.=065)	HPARO	0269	111
(NO.=066)	HPAR1	0272	250
(NO.=067)	HPAR3	0277	55
(NO.=068)	HPRINT	0279	127
(NO.=069)	HPUITS	0282	117
(NO.=070)	HSOUR	0285	79
(NO.=071)	HVAR	0287	247
(NO.=072)	H2MEMB	0292	533

(NO.=073)	MATAIN	0302	98
(NO.=074)	MATAP1	0304	398
(NO.=075)	MATDBV	0312	86
(NO.=076)	MATER	0314	60
(NO.=077)	MATRBV	0316	69
(NO.=078)	MATTRA	0318	62
(NO.=079)	NEUTRO	0320	67
(NO.=080)	OCARAC	0322	84
(NO.=081)	OCOEFF	0324	58
(NO.=082)	OECRIT	0326	39
(NO.=083)	OEQ4	0327	92
(NO.=084)	OSONIC	0329	111
(NO.=085)	OVARLI	0332	362
(NO.=086)	PAROI2	0339	19
(NO.=087)	PAROI3	0340	31
(NO.=088)	PAROI4	0341	147
(NO.=089)	PAROI5	0344	21
(NO.=090)	PAROI6	0345	34
(NO.=091)	PERABO	0346	35
(NO.=092)	PERDY	0347	334
(NO.=093)	PERIMP	0354	49
(NO.=094)	PERMA	0355	809
(NO.=095)	PERPAR	0370	192
(NO.=096)	PERSIN	0374	19
(NO.=097)	PODISS	0375	163
(NO.=098)	PODIT	0379	437
(NO.=099)	POFROT	0388	12
(NO.=100)	POMEGA	0389	61
(NO.=101)	PONOT	0391	17
(NO.=102)	POVAR	0392	24
(NO.=103)	POWRIT	0393	88
(NO.=104)	PSECHA	0395	28
(NO.=105)	PSFLBO	0396	37
(NO.=106)	PSFRON	0397	430
(NO.=107)	PSFZUB	0405	61
(NO.=108)	PSGEOC	0407	94
(NO.=109)	PSGEOP	0409	102
(NO.=110)	PSINIT	0411	27
(NO.=111)	PSK2	0412	82
(NO.=112)	PSLAM	0414	36
(NO.=113)	PSMSFT	0415	66
(NO.=114)	PSPROG	0417	207
(NO.=115)	PSPUVC	0421	44
(NO.=116)	PSPUVO	0422	31
(NO.=117)	PSRAC	0423	34
(NO.=118)	PSRESU	0424	36
(NO.=119)	PSROCP	0425	37
(NO.=120)	PSTBO	0426	35
(NO.=121)	PSVFT	0427	89
(NO.=122)	TBILAN	0429	341
(NO.=123)	TCONTR	0436	87
(NO.=124)	TDEBIT	0438	63
(NO.=125)	TECRIT	0440	67
(NO.=126)	TELIM	0442	63
(NO.=127)	TEQFE	0444	20
(NO.=128)	TGAMA	0445	57
(NO.=129)	TIMPCT	0447	167
(NO.=130)	TIMPUL	0451	284
(NO.=131)	TJAC	0457	95
(NO.=132)	TJACOB	0459	295
(NO.=133)	TJOURT	0465	63
(NO.=134)	TPERMA	0467	414
(NO.=135)	TVAR	0475	149
(NO.=136)	VECRIT	0478	140
(NO.=137)	VEFPAT	0481	403
(NO.=138)	VELIM	0489	479
(NO.=139)	VINIT	0498	164
(NO.=140)	VJACOB	0502	613
(NO.=141)	VJOURT	0514	189
(NO.=142)	VPARO4	0518	85
(NO.=143)	VPARO	0520	82
(NO.=144)	VPAR1	0522	111
(NO.=145)	VPERMA	0525	180
(NO.=146)	VVAR	0529	304
(NO.=147)	VVARP	0535	230
			24933 CARDS

DIRECTORY LIST OF J9303.JAERIGRI.FORT77

	MEMBER NAME	PAGE NO.	NO. OF CARDS
(NO.=001)	FBETA	0001	38
(NO.=002)	FCV	0002	164
(NO.=003)	FDEGRA	0006	22
(NO.=004)	FDGM	0007	86
(NO.=005)	FECPAR	0009	681
(NO.=006)	FFROL	0022	96
(NO.=007)	FFROV	0024	83
(NO.=008)	FGLGV	0026	188
(NO.=009)	FGVALF	0030	268
(NO.=010)	FGVCRI	0035	71
(NO.=011)	FGVEAU	0037	591
(NO.=012)	FGVECH	0048	605
(NO.=013)	FGVECO	0060	96
(NO.=014)	FGVFRO	0062	87
(NO.=015)	FHLFPTL	0064	42
(NO.=016)	FHVFPTV	0065	48
(NO.=017)	FJEUCO	0066	16
(NO.=018)	FLIMAS	0067	115
(NO.=019)	FLUAGE	0070	38
(NO.=020)	FLUPER	0071	36
(NO.=021)	FOXYDA	0072	23
(NO.=022)	FPEAU	0073	302
(NO.=023)	FPHICR	0079	197
(NO.=024)	FPMAT	0083	771
(NO.=025)	FPTIP	0098	228
(NO.=026)	FQCRI	0103	117
(NO.=027)	FQLE	0106	352
(NO.=028)	FQVE	0113	213
(NO.=029)	FROJE	0117	10
(NO.=030)	FROOX	0118	9
(NO.=031)	FRUPTU	0119	19
(NO.=032)	FTOVI	0120	547
(NO.=033)	FTRANS	0131	464
(NO.=034)	FUOCON	0140	13
(NO.=035)	FUODIL	0141	21
(NO.=036)	FUODIR	0142	16
(NO.=037)	FUOEMI	0143	11
(NO.=038)	FUORCP	0144	15
(NO.=039)	FVIDFA	0145	22
(NO.=040)	FZIRCO	0146	11
(NO.=041)	FZIRDI	0147	31
(NO.=042)	FZIRRC	0148	70
(NO.=043)	FZO2CO	0150	12
(NO.=044)	FZO2EM	0151	15
(NO.=045)	FZO2RO	0152	7
			6867 CARDS

DIRECTORY LIST OF J9303.JAERILOG.FORT77

	MEMBER NAME	PAGE NO.	NO. OF CARDS
(NO.=001)	CREE	0001	1213
(NO.=002)	REDLEC	0024	329
(NO.=003)	SUITE	0031	377
(NO.=004)	SYSTER	0038	4
			1923 CARDS

DIRECTORY LIST OF J9303.JAPTEST.DATA

	MEMBER NAME	PAGE NO.	NO. OF CARDS
(NO.=001)	CANONGB	0001	298
(NO.=002)	CANONPB	0007	319
(NO.=003)	CANONV	0013	514
(NO.=004)	ERSTUBE	0023	636
(NO.=005)	G2	0035	267
(NO.=006)	SMDTC	0040	404
(NO.=007)	SMDTL	0048	438
(NO.=008)	TCS3P	0057	969
(NO.=009)	TCS6P	0075	935
			4780 CARDS

Appendix C Manuals Delivered from CEA

(1) NOTE TT/EM/85-7, CATHARE version 1.1, Dossier D'Exploitation D4.2, Exploitation Graphique des Resultats.

(2) NOTE TT/EM/85-9, CATHARE, Visualisation des Resultats de CATHARE, Manuel D'Utilisation, D4.3.

(3) NOTE TT/EM/85-34, CATHARE version 1.2, Dossier D'Exploitation D4.1, Modifications Apportees par le Changement de Version.

(4) Code CATHARE 1 Version 1.2 Dossier D'Analyse Organique D32.

(5) Systeme Alos, Manuel D'Utilisation Esope 77 (Version 4.8), GEMAT (version 4.2).

(6) Code CATHARE 1 Version 1, Premiere Partie, Dossier D'Exploitation, (Donnees CATHARE).

(7) B. Ranson, Bibliotheque FORTRAN pour Terminaux Tektronix 41XX.