JAERI-M
87-137

MAIN ENGINEERING FEATURES DRIVING DESIGN CONCEPT AND ENGINEERING DESIGN CONSTRAINTS

—CONCEPTUAL DESIGN STUDY OF FY86 FER—

September 1987

Ryusei SAITO, Takeshi KOBAYASHI, Masao YAMADA
Nobuharu MIKI, Kunihiko NAKASHIMA, Masayoshi SUGIHARA
Shin YAMAMOTO, Hiromasa IIDA, Noboru FUJISAWA
Tadanori MIZOGUCHI*1, Seiji MORI*2, Junichi ADACHI*2
Junji OHMORI*3 and Tsutomu HONDA*4

日本原子力研究所
Japan Atomic Energy Research Institute

JAERI-Mレポートは、日本原子力研究所が不定期に公刊している研究報告書です。
入手の問合わせは、日本原子力研究所技術情報部情報資料課（〒319－11茨城県那珂郡東海村）あて，お申しこしください。なお，このほかに財団法人原子力弘済会資料センター（〒319-11茨城県那珂郡東海村日本原子力研究所内）で複写による実費頒布をおこなっております。

JAERI-M reports are issued irregularly.
Inquiries about availability of the reports should be addressed to Information Division, Department of Technical Information, Japan Atomic Energy Research Institute, Tokai-mura, Naka-gun, Ibaraki-ken 319-11, Japan.

編集兼発行　日本原子力研究所
印　　刷　日立高速印刷株式会社

Main Engineering Features Driving Design Concept and Engineering Design Constraints
- Conceptual Design Study of FY86 FER -

Ryusei SAITO, Takeshi KOBAYASHI, Masao YAMADA, Nobuharu MIKI
Kunihiko NAKASHIMA, Masayoshi SUGIHARA, Shin YAMAMOTO
Hiromasa IIDA, Noboru FUJISAWA, Tadanori MIZOGUCHI*1
Seiji MORI*2, Junichi ADACHI*2, Junji OHMORI*3
and Tsutomu HONDA*4

Department of Large Tokamak Research
Naka Fusion Research Establishment
Japan Atomic Energy Research Institute
Naka-machi, Naka-gun, Ibaraki-ken

(Received August 12, 1987)

Major engineering design philosophies are described, which are essential bases for an engineering design and may have significant impacts on a reactor design concept. Those design philosophies are classified into two groups, engineering design drivers and engineering design constraints. The design drivers are featured by the fact that a designer is free to choose and the choice may be guided by his opinion, such as coil system, a mechanical contiguration, a tritium breeding scenario, etc.. The design constraints may follow a natural law or engineering limit, such as material strength, coil current density, and so on.

Keywords: Design Driver, Design Constraint, FER, INTOR

---

*1 On leave from Hitachi, Ltd.
*2 On leave from Kawasaki Heavy Industries, Ltd.
*3 On leave from Toshiba Corp.
*4 Toshiba Corporation

設計概念を決める主要工学特性と工学設計条件
－核融合次期装置設計－

日本原子力研究所那珂研究所臨界プラズマ研究部
斎藤　龍生・小林　武司・山田　政男・三木　信晴
中島　国彦・杉原　正芳・山本　　新・飯田　浩正
藤沢　　登・溝口　忠憲[*1]・森　　清治[*2]・安達　潤一[*2]
大森　順次[*3]・本多　　力[*4]

（1987年8月12日受理）

核融合炉に必要な主要工学設計の考え方を示す。それは工学設計にとって重要な基盤であり，また炉設計概念にインパクトを与えるものである。設計思想を2つのグループ，即ち，工学設計ドライバーと工学設計条件に分けた。前者は設計者が自由に選択でき，設計者の考えに左右されるものであり，例えばコイルシステム，機器構成，トリチウム増殖シナリオなどである。後者は自然法則又は工学的制限に従うものであり，材料強度，コイル電流密度などがある。

那珂研究所：〒311-02 茨城県那珂郡那珂町大字向山801-1
＊1　外来研究員　㈱日立製作所
＊2　外来研究員　川崎重工業㈱
＊3　外来研究員　㈱東芝
＊4　㈱東芝

Contents

目　　次

I. Introduction

Japan Nuclear Fusion Council organized the Subcommittee on the Basic Issues of Fusion Development, August 1985. The Subcommittee studied basic principles for the nuclear fusion research and development programmes in Japan after the break-even plasma condition is achieved in JT-60. Based on the interim report worked out by the Subcommittee, it is considered appropriate to achieve self-ignition and long pulse burning and to conduct primary reactor engineering tests in the next step device, considering many aspects of nuclear fusion researches, such as the present status of nuclear fusion research and development, expectable results from large tokamaks including JT-60, pioneering characteristic as a research objective adequately compensating research investment for more than ten years after this, and problems that lie ahead awaiting solution before practicalization of nuclear fusion reactor.

Objectives of the next step device are, therefore, to accomplish missions stated below.

(1) As reactor core technologies mission, to achieve self-ignition including burn control and long pulse burning for a significant time span covering a current diffusion time.

(2) As reactor technologies mission, to develop and test tritium fuel cycle, superconducting coil, remote maintenance, and breeding test module blanket.

In addition to the above physics missions, i.e., achievement of a self-ignited plasma (physically equivalent to $Q \gtrsim 20$, Q: Fusion power multiplication factor) and stable control of plasma for a long time (more than current diffusion time of several hundred seconds), the following general guidelines for the design philosophy have been applied to the engineering design for FY86 FER.

(1) Considering the commencement of construction in near future (several years), adequately reliable data bases are chosen, although potential progress are also taken into consideration.

(2) Risks in achieving the missions stated above should be minimized as small as possible.

(3) Much attention should be paid on cost-effectiveness.

In this report, we describe the major engineering design philosophies which are the essential bases for the engineering design and has also

significant influences on a reactor design concept, in parallel with those for physics design[1]. Those design philosophies can be divided into two classes, design drivers (main engineering features driving design concept) and engineering design constraints. The design driver is a feature that a designer is free to choose. This choice may be guided by his opinion as to feasibility or drivability, but nevertheless he is free to make a choice. For example, to choose a combined vacuum vessel is a design driver. On the other hand, the design constraint is a natural law and a designer is not free to choose whether or not to follow it. For the above example of structure as a design driver, the material strength is a design constraint.

In the next two chapters, we will describe the choices for the engineering design drivers and the guidelines for the engineering constraints selected for the FY86 FER plasma design, and discuss reasons why such selections are made.

The above classification into two groups, design drivers and design constraints, was discussed in the INTOR workshop for the critical analysis of existing INTOR-like devices like FER, NET, TIBER and OTR. The contents described in this report is a part of our contributions to INTOR-related IAEA Specialists' meeting on Engineering Test Reactor national design concept, which was held March 23-27, 1987.

II. Engineering Design Drivers

The engineering design drivers, which may drive a design concept, are featured by the fact that a designer is free to choose his option, guided by his opinion. The following twelve engineering design drivers items have been chosen for the FER engineering design.

DE- 1	Plasma configuration
DE- 2	Tritium breeding
DE- 3	Lifetime fluence
DE- 4	Neutron wall loading
DE- 5	Operation scenario
DE- 6	Inductive or non-inductive current drive
DE- 7	PF coil location
DE- 8	Support of TF coil
DE- 9	Maintenance
DE-10	Vacuum boundary
DE-11	Modularization
DE-12	Shield material

In this chapter, we describe our choices for the above design drivers at first. In the remarks following each choice, many aspects accompanied with each choice are discussed.

DE-1 Plasma Configuration

[Choice for FER]

1.	Divertor		Single Null Divertor
2.	Elongation	κ	1.7
3.	Triangularity	δ	0.2 - 0.3

[Remarks]

1. These are the contributions from physics.
2. The choice of a combination of elongation 1.7 and single null divertor is reasonable (economical and reliable) from both view points of electromagnetics and configuration.
3. See physics report[1)], too.

DE-2 Tritium Breeding

[Choice for FER]

1. TBR = 0
2. Tritium breeding and extraction test using low temperature and high temperature test module.

[Remarks]

1. Tritium breeding is not scheduled for FER. Tests concerned with tritium is limited within using test module. This is a programatic decision for FER.
2. This decision results from the reason why a comparatively small lifetime fluence of FER makes it possible to supply tritium from external sources, and consequently, to reduce the risk and cost.

DE-3 Lifetime Fluence

[Choice for FER]

1. 0.3 MWY/m^2

[Remarks]

1. This is also a programatic decision for FER.
2. This value is selected according to the following consideration.
   (1) Most nuclear tests, such as neutronics test, tritium recovery test, blanket characteristic test, are able to be carried out

effectively within the selected value.

(2) This value is not sufficient to evaluate the structural materials, such as steel or its alloy. But, even 3 MWY/m^2 may not also be enough for such experiments.

(3) As mentioned above, this value is within the range possible to expect the tritium supply from external sources.

(4) And, it is also effective to keep the damage (erosion) of the first wall little, and to reduce the risk.

DE-4 Neutron Wall Loading

[Choice for FER]

1. $\sim 1\ MW/m^2$

[Remarks]

1. This value is as a result at present, and namely is not a driver for FER design.
2. If this value would exceed 2 MW/m^2, the cooling and keeping of the first wall might be difficult.
3. Considering present developmental status of the first wall materials, it is believed that wall loading of about 1 MW/m^2 should be used as appropriate value viewing from probable extrapolation into commercial reactor.

DE-5 Operation Scenario

[Choice for FER]

1. 1.2×10^4 D-T shots during 5-6 years.
2. 0.8 of duty factor capability.

[Remarks]

1. The numbers of shots are determined in FER as follows.
   (1) 5000 shots during 1-2 years in H/D experiments in Phase 1 operation.
   (2) 1000 shots during 1-2 years for low duty D-T experiments is Phase 2 operation.
   (3) 12,000 shots during 5-6 years for high duty D-T burning in Phase 3 operation.

2. The shot number is also determined from the lifetime fluence, well loading, and burn time per shot as follows.

$$Ns = \frac{Fn}{Lw \cdot \tau_B} = \frac{0.3}{1 \cdot 800/(365 \times 24 \times 3600)} \simeq 1.2 \times 10^4.$$

3. The duty factor 0.8 is considered reasonable and almost the maximum for the burn time of 800 seconds to keep the system balance, and required to conduct extensive high temperature and high pressure tests in the next step device for simulating demonstration proto-type blanket.
4. The duty factor 0.8 is also another programatic decision with 800 seconds burn.

DE-6 Inductive or Non-Inductive Current Drive

[Choice for FER]

1. Non-Inductive current ramp up.
2. Inductive current sustain at burn stage.

[Remarks]

1. These are the contributions from physics.
2. Refer to the physics report.[1)]

DE-7 PF Coil Location

[Choice for FER]

1. External to TF coil for SC coils.
2. Inside TF coil and outside shield structure for active stabilization coils.

[Remarks]

1. This choice comes fundamentally due to the employment of SC PF coils.
2. The merit can be seen from the viewpoints below:
   (1) Manufacturing
   (2) Reliability
   (3) Maintenability

3. With respect to the copper OH coil interlinked with TF coil, any preferable merit cannot be found as below:
   (1) Increase of the power supply capacity.
   (2) Difficulty for assembly and maintenance.
   (3) Little initial cost down, while running cost up.
4. Active stabilization coils are located so as to be protected from irradiation, and not so as to be influenced by conductive components when operated rapidly.

DE-8 Support of TF coil

[Choice for FER]

1. Centripetal force of TF coil is supported with a bucking cylinder outside of the OH solenoid coils.

[Remarks]

1. The centripetal force generated along the inboard leg of TF coil must be supported rigidly, in order to keep the leg shape steady without any harmful deformation, and withstand the big magnitude of the continuous or repulsive force.
2. To support this force within the reasonable stress range, the fraction of supporting area along the leg length must be needed near unit. This requires the bucking cylinder outside the OH solenoid coil in order to protect the coil from high stress due to the centripetal force.
3. The wedge type support structure is beneficial to reduce the radial build, but is a little unstable because of its taper action easy to move radially.

DE-9 Maintenance

[Choice for FER]

1. Component replaceability:
   Replaceable ; Divertor module, Outboard shield, Guard limiter.
   Semi-permanent; TF/PF/Active control coils, Cryostat, Inboard shield.

2. Access to torus:
   Horizontal
3. Personnel access or remote handling:
   Remote handling with personnel access capability
4. Containment of tritium and activated dust:
   Container with cooling equipment

[Remarks]

1. Choice of replaceable components are as follows.
   (1) The components affected with high heat flux due to particles to the divertor, plasma disruptions and energetic particles to the wall caused by TF ripple.
   (2) For machine flexibility.
   (3) It is an important feature in FER to leave the inboard shield as a semi-permanent component by employing the guard limiter to protect the inboard first wall.
   (4) Each coil belongs to the category of semi-permanent components, which is realized by initially offering enough area for the replaceable components considering their operational reliability first and foremost.
   (5) Some PF coils are not accessible because space restrictions for shielding. This comes from the structural configuration especially due to the vacuum exhaust ducts, and the mechanical support for the corresponding coil.
2. The choice of horizontal access comes from the view points below:
   (1) From a material handling point of view, reliability for the removal of large, heavy and radioactive components must be considered first.
   <Note> H-Access equipment is to be operated from the floor, while V-Access by crane or facility will be based on places far from the floor, which may sometimes be unstable.
   (2) No demerit is found in the choice of H-Access with an elongation of 1.7, and a single null divertor.
   (3) It also offers a wide area for RF/NB ports, and makes it possible to easily exchange the components of the heating facilities.

3. The concept of remote handling with personnel access for short times increases the reliability of work, and also maintains safety for workers.
4. On maintenance, tritium and activated dust should be contained to keep the reactor hall clean, and to reduce the capacity of HVAC and TCS.
   A chiller or ice assists in reducing tritium outgas from the wall surfaces.

DE-10 Vacuum Boundary

[Choice for FER]

1. Combined boundary for the plasma and coil chamber.

[Remarks]

1. An independent vacuum boundary is provided for the plasma to supply suitable and treated space, and to limit the tritium distribution.
2. The combined type is useful to reduce the structural depth compared with a separate type.
3. This type is possible to apply the developed technology by JT-60 and so on.

DE-11 Modularization

[Choice for FER]

1. Number of TF coils 12
2. Number of Shields 12
3. Number of Divertor plates 12

[Remarks]

1. Modularization results from the comprehensive consideration as below:
   (1) Needs of bays
   (2) TF ripple
   (3) Width for removal of maintainable components

(4) Manufacturing

(5) Transportation

2. Shield and divertor follow the modularization of TF coil. This corresponds to the concept of minimizing the number of modular pieces by providing sufficient access to permet withdrawal between the TF coils in simple straight line motion in order to guarantee the most reliable operation.
3. Modularization is beneficial for enhancement of reliability, and cost down due to high productivity.

DE-12 Shield Material

[Choice for FER]

1. Stainless steel of 316 type for the inboard shield

[Remarks]

1. In FER, the shield material is selected among conventional materials easy to obtain, to fabricate, and reliable as the vacuum boundary.
2. Tungsten seems preferable from the view point of shield capability, while some structural uncertainty still remains to respond to the complex requirement on reactor configuration.

   Further advanced study must be carried out hereafter.

III. Engineering Design Constraints

Engineering design constraints are featured by the law of nature and a designer is not free to choose whether or not to follow it. We have picked up the following sixteen engineering design constraints for the FER engineering design.

CE- 1	Plasma initiation
CE- 2	Cryostat
CE- 3	RF and NBI system
CE- 4	TF coil
CE- 5	PF coil
CE- 6	Control system of positional instability
CE- 7	Toroidal field ripple
CE- 8	Thickness of components
CE- 9	Gap distance
CE-10	Auxiliary system requirements
CE-11	Component replaceability
CE-12	First wall
CE-13	Shield
CE-14	Tritium system
CE-15	Vacuum system

In this chapter, the guidelines, which should be followed by a engineering designer, are stated at first for each design constraint for the FER engineering design. In the remarks following each guideline, some considerations and discussions are presented for better understanding the guidelines for the design constraints.

CE-1 Plasma Initiation

[Guideline for FER]

1. Break-down voltage: 10 V for 1 s
2. Toroidal resistance: > 30 μΩ

[Remarks]

The one-ture voltage must penetrate the plasma region faster than plasma initiation time of 1 sec. The penetration time of the vacuum vessel with ∿30 μΩ is smaller than 1 sec. Other structures in the vacuum vessel are insulated in the toroidal direction. The relatively small resistance increases the position control power by several factor, but the control power is an acceptable level. The small resistance reduces the joule heating in SC magnet structures and raises the reliability of the high resistance part.

CE-2 Cryostat

[Guideline for FER]

Maximum vacuum pressure $\leq$ 1.3 mPa (10^{-5} Torr)

[Remarks]

In the vacuum insulation, heat is transferred by radiation from the 80K thermal shield to the 4.5 K helium case and by gaseous conduction through the residual gas. The gaseous conduction heat transfer is directly proportional to the gas pressure. Therefore, this component can be made negligible compared with the radiant component by reducing the gas pressure to sufficiently low levels. The heat transfer rate by molecular conduction is given by

$$Qg/A = Fa \frac{\gamma+1}{\gamma-1} \left(\frac{R}{8\pi MT} \right)^{1/2} p(T_2 - T_1) = 88p(W/m^2)$$

where Fa = accommodation coefficient factor = 1.0

γ = specific heat ratio = 1.4 for air

R = universal gas constant = 8.31434J/mol·K

M = molecular weight of the gas = 29×10^{-3} Kg for air

p = pressure of the gas (Pa)

T = temperature of the gauge used to measure the pressure
= 300 K
T_2 = 80 K
T_1 = 4.5 K

The radiant heat transfer rate is given by

$$Qr/A = Fe\sigma(T_2^4 - T_1^4) = 0.24(W/m^2)$$

where Fe = emissivity factor = 0.1
σ = Stefan-Boltzman constant = 56.7 nW/m^2K^4

Now, let us determine the pressure in which the heat transfer rate by molecular conduction becomes equal to the radiant heat transfer rate.

$$P = 0.24/88 = 2.6 \text{ mPa} = 2 \times 10^{-5} \text{ Torr}$$

Upon further reduction in the residual gas pressure(below 1.3 mPa or 10^{-5}torr), the magnitude of the gaseous conduction heat transfer becomes much smaller than the magnitude of the heat transfer by radiation.

CE-3 RF and NBI System

[1] Heating system

[Guideline for FER]

1. Type : ICRF
2. Bays required : 1
3. Direction of launcher : Normal
4. Overall system efficiency: 0.43
   - Coupling efficiency : < 0.85
   - Transmission line efficiency: < 0.9
   - Amplifier efficiency : < 0.6
5. Power density in the overall launcher: $\leq$ 10 MW/m^2

[Remarks]

1. Type

   The loop type antenna is selected for the ICRF luncher.

2. Coupling efficiency: η_2

   The deposited power estimation depends on plasma parameters and antenna parameters. Assuming the RF power whose phase velocity is higher than that of light may be lost, the deposited power fraction η_2 is calculated and the value of 0.8 $\sim$ 0.9 is evaluated.

3. Transmission line efficiency: η_3

   The RF power is transferred through a coaxial tube and some components are inserted.

   These insertion losses are assumed to be:

coaxial tube	0.2 dB
power combiner	0.2 dB
tuner, etc	0.2 dB
total	$\sim$0.6 dB

   Considering these losses, the transmission line's efficiency may be evaluated to be $\eta_2 < 0.9$.

4. Amplifier efficiency: η_4

   The efficiency of the main amplifier with high power tetrode is assumed to be $\eta_4 = 0.65$ for the frequency range of the FER, on the basis of the following data.

   The nominal data for the candidate is as follows,

a. 8973(Varian Eimac)	0.75MW	64%
b. TH-518(Thomson-CSF)	1.0 MW	71%
c. CQK-650-2(BBC)	1.5 MW	44%

5. Overall efficiency η

   The overall efficiency is as follows,

$$\eta = \eta_2\eta_3\eta_4/(1 + \eta_5)$$

   where the accumulated loss rate η_5 of DC power supply, preamplifier, etc is considered for the input power of main amplifier. To estimate the input power, the value of η_5 may be evaluated to be

approximately 0.15.

6. Port size

The radiated power depends on the loading impedance, the electric field strength, etc. To obtain high power, a $\frac{n}{4}\lambda$ type antenna should be selected. The maximum voltage of the transmission line is limited by the break down. Usually the electric field strength is critical between the faraday shield and central conductor. This gap length is selected to obtain the resonance condition. The calculation with the FER parameters shows that it has a value of approximately 2 cm when the center conductor width is 0.3 m and its length is 0.8 m. Then the electric field strength of about 4 kV/cm for 1 MW is evaluated. Assuming that an electric field strength of 10 kV/cm may be obtained, 6.25 MW may be radiated.

The space factor of the center conductor is approximately 0.4, so the power density of about 10 MW/m^2 is evaluated.

[2] Startup assist system

[Guideline for FER]

1. Type : ECRH
2. Bays required : 1
3. Direction of launcher : Normal
4. Overall system efficiency: 0.13
   - Coupling efficiency : ~ 1.0
   - Transmission line efficiency : < 0.5
   - Amplifier efficiency : < 0.3
5. Power density in the overall luncher: ≤ 5 MW/m^2

[Remarks]

1. Type

   The waveguide antenna is selected for the ECRF launcher.

2. Transmission line efficiency: η_3

   The millimeter wave is transferred through a circular wave-guide and some components are inserted along the line. These insertion loss are as follows

Circular wave guide	0.8 dB
Mode converter TE_{04}-TE_{01}	0.24 dB

Mode converter TE_{01}-TE_{11}	0.75	dB
Miter Bend(×10)	0.4	dB
Window(×2)	∿ 0.6	dB
Mode filter	∿ 0.1	dB
Waveguide taper	∿ 0	dB
Horn antenna	∿ 0	dB
total	∿ 3	dB

Considering these losses, the transmission line efficiency may be evaluated to be $\eta_3 < 0.5$.

3. Oscillator efficiency: η_4

It is assumed that a gyrotron may be applied to the oscillator. The efficiency 20 ∿ 45% as the nominal value are reported and the useful tube efficiency is 30 ∿ 35%. To consider the effective power efficiency, the mode purity may be considered.

4. Overall efficiency: η

Overall efficiency is as follows,

$$\eta = \eta_3\eta_4/(1 + \eta_5)$$

where the loss rate of DC power supply η_5 is considered and the coupling efficiency is supposed to be 1.0. The value of η_5 is assumed to be 0.05 for the estimation of input power.

5. Port size

Experimental power density to date is approximately 7 kW/cm^2 in the range of 60 GHz(oversize wave-guide). The space factor of the antenna depends on the configuration of the launcher, e.g., the radiated power direction, gyrotron out put power, shield configuration, etc. In the FER design, aspect ratio between grill and port are assumed to be 0.45 in the height and 0.8 in the width. To consider the rate between wave-guide opening and grill, the effective space factor may be reduced to 0.1 or less. Hence, the power density in overall launcher may be 5 MW/m^2 or less, and depends strongly on the requirements for the power deposition area.

[3] Current drive system

[Guideline for FER]

1. Type : LHRF
2. Bays required : 1
3. Direction of launcher : Normal
4. Overall system efficiency: 0.20
   - Coupling efficiency : < 0.6
   - Transmission line efficiency : < 0.7
   - Amplifier efficiency : < 0.5
5. Power density in the overall luncher : $\leq$ 10 MW/m^2

[Remarks]

1. Type
   The grill antenna is used for the LHRF launcher.
2. Coupling efficiency: η_2
   The reflection rate varies widely during the operation according to the plasma conditions. In the FER design, the value of 0.6 ∿ 0.4 is evaluated as an average reflection rate. So, the coupling efficiency is assumed to be 0.6 or less.
3. Transmission line efficiency: η_3
   The RF power is transferred through a rectangular waveguide and some components are inserted along the line.
   These insertion's losses are assumed to be,

wave guide	1.0	dB
power splitter(×2)	0.3	dB
phase shifter(×2)	0.2	dB
wave guide(launcher)	0.05	dB
window(×2)	∿ 0	dB
directional coupler	0.1	dB
total	∿ 1.7	dB

   Considering these losses, the transmission line efficiency η_2 may be evaluated to be $\eta_2 < 0.7$.
4. Amplifier efficiency η_4
   High power klystrons may be applied. The power efficiency is assumed to be η_4 ∿ 0.5 based on the nominal data up to date. The efficiency is as follows in the rang of 2GHZ.

E3778(Toshiba)	1	MW·10s	49%
LD4444(NEC)	1	MW·10s	50%
VKS-8269K(Varian)	0.5	MW·Cw	52%

5. Overall efficiency η

   Overall efficiency η is as follows,

$$\eta = \eta_2\eta_3\eta_4/(1 + \eta_5)$$

   where the loss rate of the DC power supply η_5 is considered. To estimate the input power, the value of 75 may be evaluated to be approximately 0.05.

6. Port size

   Calculations with FER parameters show that the electric field strength is approximately 1.6 kV/cm for 1kW/cm^2 radiated power. Some experimental value to date show power density at 2 ∿ 8 kW/cm^2, so 5 kW/cm^2 may be obtained. The space factor of the grill depends on its wave guide configuration and power feed. The aspect ratio between grill and port are supposed to be 0.9 for height and 0.3 for width. Hence, overall launcher power density of 10 MW/m^2 is required under this space factor.

[4] NBI heating and the current drive system

[Guideline for FER]

1. Bays required: 3
2. Energy: < 0.5 MeV
3. Beam divergence: > 0.3 deg
4. Injection angle: Tangential
5. Power density of the shine-through: < 6 MW/m^2
6. Power density in the overall port

   For non-profile control : < 40 MW/m^2

   For current profile control: < 20 MW/m^2

[Remarks]

1. Type

   The negative ion based NBI is applied.

2. Energy

   For plasma heating under the FER parameters, a normally injected

beam is applied and an energy of more than 200 keV is required. However, for current drive the beam should be injected tangentially and the energy may be higher, i.e., 500 ∿ 1000keV. Considering that positive ion based NBI technology can be extrapolated beyond the present state of the art, acceleration voltage may be selected to be 500 keV.

3. Beam divergence
   Considering the data of ion sources (positive/negative), the beam divergence 0.3° and not less may be obtained.
4. Power density of shine-through
   The shine-through power depends on the plasma density. In the FER, a shine-through rate of 20% is supposed and a peak power density of 6 MW/m^2 is evaluated.
5. Port size
   For the profile control, the beam deposition area needs to be varied, so the port height should be large. However, the geometrical configuration of the reactor shielding may limit the size. From these requirements, the power density limit in the overall port has become 20 MW/m^2 for the current profile control.

CE-4 TF Coil

[1] Conductor design

[Guideline for FER]

The following conditions are considered as main constraints.

1. Type of superconductor: $(Nb\text{-}Ti)_3Sn$
2. Maximum magnetic field: $\leq$ 12 T
3. Type of cooling: Forced flow
4. Terminal voltage: $\leq$ 20 kV
5. Hot spot temperature: $\leq$ 100 K
6. Allowable stress in conduit: $\leq$ 600 MPa
7. Maximum pressure in conduit: $\leq$ 15 MPa
8. Operating current: 30 KA
9. Coil manufacturing process: React and wind
10. Current density in conductor: 35 A/mm^2
11. Stability against disruption: yes

[Remarks]

1. $B_{max} \leq 12T$ for $(Nb\text{-}Ti)_3Sn$ superconductor
   $(NbTi)_3Sn$ superconductor has the highest performance (Tc, Hc, Jc etc.) of industrially manufactured superconductors. A critical current density of about 600 A/mm^2 at 12T for $(Nb\text{-}Ti)_3Sn$ superconductor is a practical limit for large scale magnets.
2. Type of cooling
   Forced flow cooling is selected because of increasing tightness of the winding and increasing insulation voltage for a fast energy reduction in an emergency.
3. Terminal voltage
   The terminal voltage is limited by coil insulation and the value of 20 kV comes from insulation technology.
4. Hot spot temperature
   The peak conductor temperature is an ordinary set to the value of 100 K in order to reduce the thermal stress on the negligible order. The thermal expansion of the conductor is negligible between the temperature of 4 K and 100 K.
5. Allowable stress in the conduit
   The limit of stress intensity follows from ASME code. The allowable limit of stress intensity for primary membrane stress is defined as follows;

   $$S_m = \mathrm{Min}\ (2/3Sy,\ 1/3Su)$$

   where Sy is yield strength and Su is tensile strength. In the case of high manganese stainless steels the allowable limit of stress intensity is about 600MPa.
6. Maximum pressure in the conduit
   The maximum pressure value of 15MPa is chosen so the maximum stress of a square shaped conduit material does not exceed the allowable stress limit at the beginning of current dump, when considering both magnetic forces and pressure are acting on the conduit.
7. Operating current
   The relation between dumping time constant(τ_o), stored energy(Q), terminal voltage(V) and operating current(I) is given by the following equation

$$\tau_o = 2Q/(V \cdot I)$$

If we choose $V \leq 20$ kV and $T_{max} \leq 100$ K, the operating current must be above 30 kA. On the other hand, the high current conductor has a problem of winding strain of the composite superconductor in the manufacturing process.
Under these constraints, the operating current of 30 kA was selected for TF coils.

8. Conductor manufacturing process
React and winding method was selected by considering the difficulty in achieving homogenious, stabilized temperature control in large scale TF coils.

9. Current density in conductor
The allowable winding-pack current density has been decided, based on both the superconductor design and the conduit structural design.
It is reasonable that the current density in the cable space is about 65 A/mm^2 at 12 T when using $(Nb\text{-}Ti)_3Sn$ superconductor with the following conditions.

Critical current/operating current $(I_c/Iop) \geq 2.0$
Limiting current/Operating current $(I_B/Iop) \geq 1.0$
Copper area/non copper area (m) > 1.5
Fraction of strands in the cable space = 0.6

The conduit was designed to be 3.5 mm thick to operate at the stress level of below 600 MPa. The fractions of conduit and insulation in the winding pack are as follows:

Fraction of conduit : 0.38
Fraction of insulation : 0.10

Then the conductor current density becomes about 35 A/mm^2.

10. Stability against disruption
The coil design allows that the maximum temperature of the conductor be less than about 100 K at dump mode. Considering a re-cooldown time of more than two weeks, the stability against disruption is necessary. With the magnetic shielding effect of blanket, shield and vacuum vessel, the effective time constant

of a disruption is lengthened to about 100 msec, and the effective magnetic field change is about one tesla. The field change rate of 10 T/S in this case is the allowable value for FER coil design.

[2] Structural design

[Guideline for FER]

1. Allowable stress Sm: 600 MPa
2. Cross sections of coil case and bucking cylinder are designed based on stress calculations.
   In-plane forces and out-of-plane forces are considered to calculate the TF coil stress.

[Remarks]

1. Allowable stress
   The limit of stress intensity is based on ASME code. The allowable limit of stress intensity for primary membrane stress is defined as follows.

   $$Sm = [2Sy/3,\ Su/3]$$

   where, Sy = yield strength
   Su = tensile strength

   The allowable limits of stress intensity are classified in Table 1 according to their stress categories.
   Table 2 shows examples of chemical composition of high manganese stainless steels and Table 3 shows their mechanical properties.[2)]
   When used "L", Sy = 1551 MPa, Su = 1826 MPa, so Sm = 1826/3 = 609 = 600 MPa.
2. Required section of the coil case and the bucking cylinder
   Figure 1 shows the principal stress of the coil case. The following stresses occur at the TF coil case and the bucking cylinder. These stresses must be lower than the allowable stress.
   (1) Outer ring: tensile stress by hoop force and bending stress at shoulder by centering force.
   (2) Inner ring: tensile stress by hoop force and tensile and bending stress by overturning force.

(3) Side plate: tensile stress by hoop force and bending stress by overturning force.

(4) Bucking cylinder: compressive stress by centering force. This stress must be lower than allowable stress and allowable buckling stress.

Table 1 Stress Category and Allowable Limits of Stress Intensity

Stress Category	Allowable Limits of Stress Intensities
Primary Membrane (General) Stress Intensity	Sm
Primary Membrane (Local) Stress Intensity	1.5 Sm
Primary Membrane (Local) and Bending Stress Intensity	1.5 Sm
Primary + Secondary Stress Intensity	3 Sm

Table 2 Chemical Composition of High Mn Stainless Steels(%)

Steel	C	Si	Mn	Cu	Ni	Cr	Nb	N
A	0.054	0.30	24.5	--	0.97	15.5	0.061	0.213
B	0.064	0.32	25.0	1.03	0.99	15.4	0.063	0.212
C	0.067	0.31	20.1	--	0.99	15.2	0.063	0.193
D	0.055	0.29	19.8	1.01	0.98	15.4	0.061	0.206
E	0.051	0.25	18.8	--	2.99	15.4	0.070	0.193
F	0.064	0.30	24.7	0.98	0.94	15.2	--	0.193
G	0.051	0.29	25.1	1.02	1.02	13.4	--	0.303
H	0.053	0.29	24.9	1.03	3.05	15.6	--	0.338
I	0.044	0.29	24.9	1.04	1.01	15.4	--	0.302
J	0.022	0.32	25.0	1.02	--	13.3	--	0.234
K	0.018	0.32	25.2	1.01	--	13.4	--	0.353
L	0.018	0.32	25.0	1.00	--	13.4	0.079	0.338

P: 0.011-0.019%, S: 0.007-0.011%, Al: 0.005-0.017%

Table 3 Mechanical Properties of High Mn Stainless Steels at 4 K and 77 K

Test Temp.	4K						77K				
Steel	YS (MPa)	TS (MPa)	El (%)	RA (%)	E (GPa)	CVN (J)	YS (MPa)	TS (MPa)	El (%)	RA (%)	CVN (J)
A	1224	1637	30	37	222	63	873	1313	32	54	84
B	1275	1652	33	46	219	70	854	1243	29	58	89
C	1137	1548	17	20	221	57	800	1319	28	30	79
D	1161	1578	21	21	209	54	848	1377	34	26	76
E	1141	1612	26	23	228	54	880	1081	21	57	57
F	1213	1517	37	45	211	50	898	1024	21	58	59
G	1486	1768	25	41	223	13	1025	1219	16	57	37
H	1428	1791	26	43	217	13	1034	1193	17	58	33
I	1398	1737	29	44	213	23	998	1154	18	60	49
J	1102	1549	27	24	208	50	870	1074	21	57	66
K	1447	1749	18	25	220	2	880	1189	17	59	22
L	1551	1826	20	21	224	6	1133	1258	16	53	21

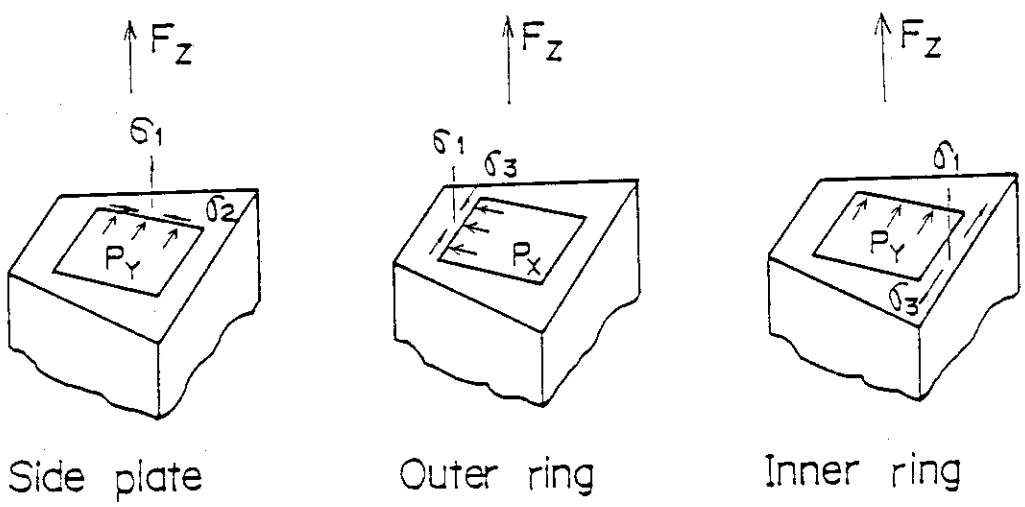

Fig. 1 Principal stress of TF coil case

CE-5 PF coil

[1] Conductor design

[Guideline for FER]

The following conditions are considered as main constraints.

1. Type of superconductor: $(Nb-Ti)_3Sn$
2. Maximum magnetic field: $\leq$ 12 T
3. Type of cooling: Forced flow
4. Terminal voltage: $\leq$ 20 kV
5. Hot spot temperature: $\leq$ 100 K
6. Allowable stress in the conduit: $\leq$ 600 MPa
7. Maximum pressure in the conduit: $\leq$ 15 MPa
8. Operating current: 40 KA
9. Coil manufacturing process: React and wind
10. Current density in the conductor: 30 A/mm^2
11. Magnetic field ramp-up rate: 10 T/S
12. Stability against disruption: yes

[Remarks]

1. $B_{max} \leq$ 12T for $(Nb-Ti)_3Sn$ superconductor
   $(Nb-Ti)_3Sn$ superconductor has the highest performance (Tc, Hc, Jc etc.) of industrially manufactured superconductors. A critical current density of about 600 A/mm^2 at 12 T for $(Nb-Ti)_3Sn$ superconductor is a practical limit for large scale magnets.
2. Type of cooling
   Forced flow cooling is selected because of increasing tightness of the winding and increasing insulation voltage for a fast energy reduction in an emergency.
3. Terminal voltage
   Terminal voltage is limited by coil insulation and the value of 20 kV comes from insulation technology.
4. Hot spot temperature
   The peak conductor temperature is ordinary set to the value of 100 K in order to reduce the thermal stress on the negligible order. The thermal expansion of the conductor is negligible between the temperature of 4 K and 100 K.
5. Allowable stress in the conduit
   The limit of stress intensity follows from ASME code. The

allowable limit of stress intensity for the primary membrane stress is defined as follows;

$$S_m = \mathrm{Min}\ (2/3Sy,\ 1/3Su)$$

when Sy is yield strength and Su is tensile strength. In the case of high manganese stainless steels the allowable limit of stress intensity is about 600 MPa.

6. Maximum pressure in the conduit

The maximum pressure value of 15 MPa is chosen so the maximum stress of a square shaped conduit material does not exceed the allowable stress limit at the beginning of current dump, when considering both magnetic forces and pressure are acting on the conduit.

7. Operating current

The relation between dumping time constant (τ_o), stored energy (Q), terminal voltage(V) and operating current(I) is given by the following equation;

$$\tau_o = 2Q/(V \cdot I)$$

If we choose $V \leqq 20$ kV and $T_{max} \leqq 100$ K, the operating current must be above 30 kA. On the other hand, the high current conductor has a problem in the manufacturing process. Under these constraints, the operating current of 40 kA was selected for the PF coils.

8. Conductor manufacturing

One of main problems of using composite type superconductor in the central solenoid is strain effect caused by a small radius of the coil. For the central solenoid coil, the sum of bending strain of about 1% and the strain of about 0.2% due to magnetic force is in the irreversible region of Ekin's experiments. According to his paper, the degradation of the critical current caused by the cyclic magnetic force (fatigue effect) is more than 40%. Therefore we have to manufacture central solenoid coils by using wind and react method.

9. Current density in conductor

The allowable winding-pack current density has been decided, based on both the superconductor design and the conduit structural design. It is reasonable that the current density in the cable space is about 65 A/mm^2 at 12 T when using $(Nb\text{-}Ti)_3Sn$ superconductor with the following conditions.

Critical current/operating current (I_c/Iop) $\geq$ 2.0
Limiting current/operating current (I_B/Iop) $\geq$ 1.0
Copper area/non-copper area (m) > 1.5
Fraction of strands in the cable space = 0.6

The conduit was designed to be 6 mm thick to operate at the stress level of below 600 MPa. The fractions of the conduit and the insulation in the winding pack are as follows:

Fraction of conduit : 0.45
Fraction of insulation: 0.09

Then the conductor current density becomes about 30 A/mm^2.

10. Magnetic field ramp-up rate.

Plasma current ramp-up period from zero to about 0.5 MA at break down is one second and needs about 10 Vs flux of ohmic heating coils. Calculated ramp-up rare of PF coils are 3 ∿ 7 T/S and required fast ramp-up rate is about 10 T/S.

11. Stability against disruption.

The coil design allows that the maximum temperature of the conductor be less than about 100 K at dump mode. Considering a re-cooldown time of more than two weeks, the stability against disruption is necessary. With the magnetic shielding effect of blanket, shield and vacuum vessel, the effective time constant of a disruption is lengthened to about 100 msec and the effective magnetic field change is about one tesla. The field change rate of 10 T/S in this case is allowable value for FER coil design.

CE-6 Control System of Positional Instability

[Guideline for FER]

The following conditions are considered as main constraints.

1. Passive conducting material close to plasma: Cu
2. Active coil needed inside TF : Yes
3. Growth time of vertical instability : > 50 ms
4. Location of active coils: Inside TF coil and outside shield structure
5. Penetration time of control field: < 50 ms

[Remarks]

1. Stabilization and control of vertical position.
   The vertical instability of the elongated plasma must be stabilized by passive conducting material close to the plasma surface, with a time scale where the active control is possible. The growth time of the vertical instability must be comparable to or greater than the penetration time of active control field. In the FER, active control coils location is restricted on the outside of the shielding structures because of high radiation to the coil insulation. The penetration time of the control field is estimated to be ∿50 msec. So the growth time of the vertical instability must be greater than ∿50 msec and is specified to be 50 ∿ 100 msec in FER. The saddle-like Cu shells of 2 cm thickness outboard of the inner shield sector meet this specification when $\kappa \sim 1.7$. The location of the active control coils must be selected considering control power, coil support for magnetic force, radiation damage, joule heating in the superconducting magnet structures and maintenance. The radiation condition inside the shield structure is over the allowable dose limit ($\sim 10^9$ rad) for coil insulation. Therefore, the active control coils must be located outside the shield structure. In the FER, the location is selected to be inside TF magnet and vacuum vessel and outside the shield structures. The control power is estimated to be ∿30 MW and less by a factor ∿10 than that of control coils located outside TF coil.

2. Plasma current, position and shape control.
The active coil for vertical position control can generate vertical field if the upper and lower coils are independently controlled and can control plasma radial position in a fast (∿100 ms) time scale although the control capacity is small. The plasma current and shape is controlled slowly in sec order time scale by the PF coils outside TF coil. The vertical and horizontal positions are also controlled by the PF coils for large but slow displacement in addition to the fast control by the active coils. Faster control of less than ∿1 msec by the PF coil is very difficult because of the shielding of control field by conductive structures and by the expected unacceptably high control power.

CE-7 Toroidal Field Ripple (at plasma edge)

[Guideline for FER]

1. Field ripple (at plasma edge) 0.75% (See physics report[1])
2. Alpha loss
   Maximum first wall heat load

[Remarks]

1. The TF ripple depends on the number of TF coils and their dimension. The allowable value is determined from
   (1) allowable limit for stable plasma confinement,
   (2) allowable limit of heat load to first wall due to alpha loss.
2. In FER, the allowable limit of the heat load to first wall is considered 0.4 MW/m^2.
3. In the case of 0.75 % TF ripple, the practical heat load is estimated near the limit, or above it because of some uncertainty of factor 2 due to the calculation model.

CE-8 Thickness of Components

[1] Shield thickness

[Choice for FER]

1. Shield: Inboard to protect TF coil (See CE-13)
   Outboard to protect personnel
   Top "
   Bottom "
2. Irradiation level
   2.5 mrem/h one day after shutdown at the outside of cryostat, and at the upper PF coil location.

[Remarks]

1. The inboard shield thickness is in accordance with TF coil protection capability. That is,
   (1) To keep the coil temperature below the critical value.
   (2) To keep the dose rate below allowable value for superconductor, insulator and substrates, in correlation with the lifetime fluence.

(3) Reasonable limit of refrigeration capacity.

2. The outboard or the top shield thickness is required the capability so as to permit the personel access to the reactor after the reactor shutdown. The protection of the coil must be satisfied deservedly.
   In FER, the bottom shield is not sufficient to allow the personel access even during reactor shutdown after activated. This comes from the fact that the priority is given to the structural problem to withstand the forces, such as electromagnetic force, or seismic motion, and that the thickness of the exhausting duct wall is thin due to the limited space, and the gaps along the exhausting duct permit the streaming too.
3. The shield thickness depends on dose rate, activation level and allowable irradiation level.
   2.5 mrem/h is the value applied to supervised workers according to the regulation (5 rem/y).
   The time after shutdown and the reference location are as the choice in FER.

[2] Cryostat in access port

[Guideline for FER]

Top	0.2 m
Bottom	0.3 m
Inboard	0 m

[Remarks]

Each thickness of the cryostat component is determined from structural point of view.

(1) Conditions considered:

		TOP	Bottom
Self weight	(ton)	9.5	70
Pressure	(MPa)	0.1	0.1
Load	(ton)	-	310
Seismic acceleration	(g)	0.3	0.3
Displacement	(mm)	-	0.2

(2) Structural evaluation:

ASME Section 3, as far as possible.

(3) Adopted structure:

Plate with rib structure

<Note> The inboard wall is common with the shield structure in FER.

[3] Scrape off layer

[Guideline for FER]

Inboard	0.2 m
Outboard	0.1 m
Top	0.3 m
Bottom	0.9 m (Null point - shield surface)

[Remarks]

It is given constraints for structure from physics report[1] in FER.

[4] Blanket thickness

[Guideline for FER]

No blanket in FER, except test modules.

CE-9 Gap Distance

[1] Inboard

[Guideline for FER]

1.	Cryostat - helium can	0.085 m
2.	Bucking cylinder - OH coil	0.05 m
3.	Cryostat - Shield	0.045 m (Void at bellows)
4.	Shield - Blanket	0 m (No blanket)

[Remarks]

1. The clearance between the cryostat and the herium can of TF coil is determined considering following conditions.

(1)	Tolerance of corresponding parts, and assembling.	< 10 mm
(2)	Displacement due to coil cooling and cryostat baking.	15
(3)	Deformation due to coil excitation.	4
(4)	Gap for assembling.	< 10
(5)	Space for thermal insulation.	50
(6)	Clearance for seismic motion.	6

2. The clearance between bucking cylinder and OH coil is determined considering following conditions.

(1)	Tolerance of corresponding parts.	< 10 mm
(2)	Displacement due to cooling.	6
(3)	Deformation due to coil excitation.	3
(4)	Tolerance of assembling.	< 10
(5)	Clearance for assembling.	< 30
(6)	Gap for seismic motion	0 (Unified)

[2] Top and bottom

[Guideline for FER]

Blanket - Shield		0	(No blanket)
Shield - Cryostat		0	(Common)
Cryostat - Coil He can	(Top)	0.4 m	
	(Bottom)	0.3 m	

[Remarks]

The gap distance between the cryostat and the coil He can is offered to provide the space for piping and assembling.

[3] Outboard

[Guideline for FER]

Blanket - Shield	0	(No blanket)

CE-10 Auxiliary System Requirements

[Guideline for FER]

1.	Heating System	See CE-3
2.	Startup System	"
3.	Current Drive System	"
4.	NBI Heating / Current Drive System	"
5.	Fueling System	
	Type	Gas puff/Pellet injection
	Bays	1 (for pellet injection)
	Direction	Normal
6.	Testing Section	4 Bays
7.	Inspection Section	2 Bays
8.	Diagnostics and I&C System	2 Bays

[Remarks]

1. The type choice of heating and current drive devices is the role of physics in FER
2. The bay occupation is as follows.

ICRH	20 MW	1
LHRF	20 MW	1
ECRH	3 MW	1
Test Module		4
Inspection		2
Diagnostics and I&C		2
Fueling		1
(Total)		12

3. Port Size is determined according to following criteria, respectively

(1) ICRH	10 MW/m^2	
(2) NBI	40 MW/m^2	for non-profile control.
	20 MW/m^2	for current profile control.
(3) LHRF	10 MW/m^2	
(4) ECH	10 MW/m^2	
(5) NBI injection angle	Tangential	

<Note>

1. The values derive from the ratio of transmitted power to geometrical area of respective port from view point of space share.
2. The values are estimated for FER from past experiences.
3. In NB case, some extra area is needed for current profile control, which reduces the transmission power density than for non-profile control.
4. NB is injected tangentially to drive the current. Some consequent effects are predicted on the reactor structure.

CE-11 Component Replaceability

[Guideline for FER]

1. Size of the largest replaceable torus component to be maintained.

   Movable shield $6.5^{L} \times 3^{W} \times 5^{H}$ m

   250 tons

2. Frequency of replacement.

   TBD

   (The maximum capacity of maintenance facilities)

   Divertor : 6 modules/6 months

   Shield : 1 module /Year

3. Maintenance access port size between TF coils.

   $3^{W} \times 6^{W}$ m

[Remarks]

See DE-7

CE-12 First wall

[1] Structural material

[Guideline for FER]

Annealed SS316

[Remarks]

A lot of factors should be considered for selecting structure material for the first wall/blanket, such as, 1) compatibility with other materials, 2) physical and mechanical properties, 3) radiation effects, 4) induced activity, 5) fabrication and joining, 6) material data base, 7) industrial capability, and so on.

Ferritic/martensitic steels are superior to austenitic steels in several properties such as thermal resistance, irradiation-induced void swelling and creep.

Judging from the current data base of ferritic/martensitic steels, a lot of problems remain unresolved when applying them to the fusion environment.

On of the most important problems using ferritic steels for first wall/blanket is the strong decrease of fracture toughness caused by irradiation. That can be characterized by the ductile brittle transition temperature (DBTT). Irradiation with fact neutrons lower the fracture energy and shifts the DBTT to higher values. At the moment, the possibility cannot to excluded, that for irradiation temperatures below 300°C the DBTT may become higher than the operating temperature.

Judging from the timing of FER construction, the operating conditions of FER and the material data base, austenitic stainless steel has been found to best meet the overall requirements of a structural material and it has, therefore, been selected as the reference material for FER.

A cold-worked SS is favorable because of its superior irradiation resistance and mechanical strength properties. It is judged, however, that it is difficult to keep the cold-worked effect during fabrication considering the complex FW structure and the present technologies.

[2] Surface material (for Protection Armor and Startup limiters)

[Guideline for FER]

Graphite or C/C Composite

[Remarks]

Surface materials of the first wall are decided from the viewpoints of the necessity of the start-up limiter, impurity problems into the plasma and the protection of the reactor structure against off-normal conditions.

Judging from the operating conditions of FER, it is necessary to attach low Z material (Graphite or C/C composite) on part of the first wall area. Namely, the armored guard limiters (sacrificed limiters) are installed on the inboard and upper first wall regions in order to protect the shield structure against disruptions and associated run-away electrons.

Recent preliminary analysis shows that it may be rather difficult to form high recycling divertor plasmas during the RF current ramp-up phase, except for fairly high driving efficiencies. The upper limiters can also be used as the start-up limiter during the RF current ramp-up phase if necessary.

Considering the intense heat loads, appropriate C/C composite would be preferable because of their superior thermal resistance performance.

[3] Allowable stress

[Guideline for FER]

Structural material: ASME

Non-structural material: Crack propagation analyses

[Remarks]

At present, we have no definitive design criteria for FER. The following tentative design criteria are set for designing reactor components:

Any structural material should be designed based on the ASME Code, however, safety factors for fatigue data should be re-evaluated according to the load condition.

Non-structural materials such as armor material can be allowed to

crack and melt. In order to estimate the lifetime of such components, detail lifetime estimates by crack propagation analyses should be carried out.

[4] Allowable temperature

[Guideline for FER]

350°C for austenitic stainless steel

1800°C for graphite or C/C composite

[Remarks]

In general, the maximum operating temperature of austenitic stainless steel is limited to 350° by irradiation induced swelling. This limitation is not so severe for low fluence machines like FER.

The maximum operating temperature of graphite armor is limited by plasma contamination by sublimation. In FER the temperature limit of graphite is set to be about 1800°C.

[5] Peak surface heat flux on FW

[Guideline for FER]

0.4 MW/m^2

[Remarks]

The maximum surface heat flux deposited on the first wall during the normal burning phase is kept below 0.4 MW/m^2 (including additional heating due to α-ripple loss) because the following reasons:

- To obtain a fatigue lifetime of the SS first wall substrate of more than 10^4 cycles.
- To keep the maximum temperature of the graphite armor mechanically attached to first wall substrate below 1800°C.

[6] Baking temperature

[Guideline for FER]

150°C

[Remarks]

Bakeout of the reactor vessel is necessary at initial starting of the reactor and after maintenance operations which require opening the

vessel. Bakeout is also used before maintenance operations if the reactor will be opened, to limit the amount of tritium released into the reactor hall.

The baking temperature of FER is chosen to be 150°C because of the following reasons.

- A temperature of 150°C is achievable by the ordinary cooling system for the reactor structures. This simplifies the supporting structure of the reactor components and a bakeout heat-up system.
- To achieve good vacuum conditions ($<10^{-8}$ torr) in the plasma chamber after it has been exposed to air, discharge cleaning of absorbed gases (CH_4, CO, H_2 etc.) besides a bakeout operation will be needed. At present, although the definite cleaning procedure for FER has not been decided, Tailor Discharge Cleaning and Glow Discharge Cleaning which are adopted in JT-60 are in consideration. As it is effective to discharge at a high temperature, discharge cleaning at a temperature of 150°C will require a fairly long cleaning period.
- It is possible to reduce the tritium outgassing rate into the reactor hall to the order of 1 Ci/d during maintenance by performing a one week bakeout at 150°C and cooling the removed components at a low temperature (∿30°C in FER). This will enable the employment of a simple ventilation system, e.g., ventilation of all the released tritium directly to the stack.

CE-13 Shield

[1] Biological shield requirement

[Guideline for FER]

2.5 mrem/h one day after shutdown

[Remarks]

The FER shield is designed to achieve a 2.5 mrem/h dose equivalent in the reactor hall one day after shutdown with all shields in place. This dose level permits a 'hands-on' mode of operation to maintain the external reactor components.

However, all reactor components are designed to permit completely remote assembly and disassembly.

[2] Coil shield requirement

[Guideline for FER]

Dose limit of TF coil insulator	$<3 \times 10^9$ rad
Maximum neutron fluence	$<2 \times 10^{18}$ n/cm^2
Cu radiation damage	$<4 \times 10^{-4}$ dpa
Maximum nuclear heat of TF coil	<3 mW/cc
Total nuclear heat in TF coil	<35 kW

[Remarks]

The nuclear heating rate is proportional to the neutral and gamma ray fluxes in TFC. The maximum local nuclear heating rate in the superconductor (SC) can be as high as 3 mW/cm^3. At this value, there is little effect on stability and heat can be sufficiently removed.' The total nuclear heating in the SC and the helium vessel should be smaller than 35 kW. This value was determined to obtain a reasonable refrigeration capacity.

The other three radiation damage related criteria are dependent on the neutron and gamma ray fluence in TFC. These are not strong constraints for FER because of its low fluence. The radiation induced resistivity increase, ρ_r in the copper stabilizer should be limited to 2.5×10^{-8} Ωcm. The value of the dpa rate causing $\sim 2.5 \times 10^{-8}$ Ωcm differs between 1×10^{-4} and 6×10^{-4} dpa[3)~6)]. Intercomparison and evaluation of dpa to ρ_r conversion factor should be further carried out to reduce the ambiguity in this factor. The average value of 4×10^{-4} was selected here as the reference. Assuming 80% of the radiation induced resistivity increase of copper can be recovered by the room temperature annealing[7)], the copper dpa rate criterion was set at 4×10^{-4} dpa/(1 MWY/m^2).

The SC fluence of the fast neutrons with energy greater than 0.1 MeV should be lower than 2×10^{18} n/cm^2 over the lifetime. This value is based on the two experimental results[5),8)].

Experiment results from neutron irradiation at low temperature[9)~11)] suggests that polyimides can withstand a radiation dose of 10^{10} rad and retain high resistivity and mechanical strength. There is an irradiation data by Kato and Takamura[12)] that no change are observed in strength of glass fiber reinforced polyimide after irradiation of 1.1×10^9 rad at low temperature. Based on these data, the value of 3×10^9 rad was adopted for the insulator dose limit.

CE-14 Divertor

[1] Peak surface heat flux on inclined target plates

[Guideline for FER]

$<2\ MW/m^2$

[Remarks]

From the viewpoint of fatigue of the Copper heat sink, the divertor target plates are inclined to the separatrix line to reduce the maximum heat flux which results in about 2 MW/m^2.

The fatigue lifetime of the Cu heating sink covered by 6 mm of tungsten armor is estimated to be $\sim 2.5 \times 10^4$ cycles based on the ASME code.

[2] Surface material of divertor plates

[Guideline for FER]

TBD

[Remarks]

The surface material should be selected from the viewpoints of sputtering resistance, thermal resistance and the impurity control.

Assuming a low temperature/high density divertor plasma, tungsten is proferable as the primary candidate material for FER.

Major concerns for using W material are as follows:

- Realizing a low temperature plasma condition during a current ramp-up phase.
- Erosion due to impurities such as oxygen, carbon.

When it is difficult to form high recycling divertor plasma during the RF current ramp-up, graphite may be chosen as the surface material of divertor plates. A redeposition effect of graphite should be examined in detail because of the erosion problem for a burning phase.

CE-15 Tritium System

[1] Tritium release to a reactor hall

[Guideline for FER]

normal: TBD

maintenance: TBD

accident: TBD

[Remarks]

Exposure guideline to the general public for the normal operation of FER should be determined based on the ALARA principle. A dose objective value of 5 mrem/y, the same value as light-water power reactors, can be applied to FER as a design and operational goal in Japan.

In case of accidents, larger quantities of the vulnerable inventory can be released without giving exposures higher than the limit for a once-in-a-lifetime occurrence. The whole body dose to the maximum exposed individual should not exceed 25 rem for any credible accident.

CE-16 Vacuum System

[Guideline for FER]

Number of ports	12
Size of ports	$\sim 0.8 \times 0.8$ m/port
Nuclear heating	TBD
Detonation limit	$<H_2$ 12 torr

[Remarks]

A number, location and size of exhaust ports are decided in order to achieve the vacuum pumping capacity of 10^5 1/s required from the impurity control consideration. Supporting legs of the reactor structure installed between TF coils are used as exhaust ducts for the aim of saving space. And the port size is set taking the conductance required, the shielding performance to TF coils and the interference with PF coils into account.

The nuclear heating rate in the vacuum system of FER is estimated below 0.1 kW and the impact on the refrigeration capacity is small.

The volume of the cryopump room and the operation period of the cryopanel are decided to keep the hydrogen pressure less than a half of the detonation limit.

IV. Summary

The engineering design philosophies for the FY86 FER conceptual design are stated. They are classified into two groups, engineering design drivers and engineering design constraints, according to the feature whether or not a designer is free to choose his option. Twelve design drivers have been picked up and the choices for them are elucidated. Sixteen design constraints have also been evaluated and the guidelines for them are described.

Acknowledgements

The authers would like to express their appreciation to FER design team members for their fruitful discussions.

The authors also would like to express their appreciation to Drs. S. Mori, K. Tomabechi, M. Yoshikawa and S. Tamura for their continued support.

IV. Summary

The engineering design philosophies for the FY86 FER conceptual design are stated. They are classified into two groups, engineering design drivers and engineering design constraints, according to the feature whether or not a designer is free to choose his option. Twelve design drivers have been picked up and the choices for them are elucidated. Sixteen design constraints have also been evaluated and the guidelines for them are described.

Acknowledgements

The authers would like to express their appreciation to FER design team members for their fruitful discussions.

The authors also would like to express their appreciation to Drs. S. Mori, K. Tomabechi, M. Yoshikawa and S. Tamura for their continued support.

References

1) N. Fujisawa et al., "Main physics features driving design concept and physics design constraints —— Conceptual design study of FY86 FER ——" JAERI-M 87-093 (1987).

2) Advances in Cryogenic Engineering Materials. Volume 30.

3) C.E. Klabunds, R.R. Coltman, Jr. and J.M. Williams, J. Nucl. Materials 85 & 86 (1987) 385-389.

4) J.A. Horak and T.H. Blewitt, Nucl. Technol. 27 (1975) 416-438.

5) B.S. Brown, J. Nucl. Materials 79 (1981) 1-14.

6) M.W. Guinan and R.A. Van Konynenburg, UCID-19730, Lawrence Livermore Laboratory (1983).

7) R.E. Nygren, J. Nucl. Materials 103 & 104 (1981) 735.

8) A.R. Sweedler, D.E. Cox and S. Moehlecke, J. Nucl. Materials 72 (1978) 50.

9) R.H. Kernohan, et al., ORNL/TM-6708 Oak Ridge National Laboratory (1978).

10) F.W. Clinard, Jr., and G.F. Hurley, J. Nucl. Materials 103&104 (1981) 705.

11) T. Kato and S. Takamura, Teionkogaku (Cryogenic Engineering), 18 No.4 (1983) 193-199 (in Japanese).

APPENDIX

In parallel with the work on the design drivers and constraints, the specifications of FER were also discussed and determined.

Six candidates in Table A.1 have been studied for FER. The option C and the NBI-R have the parameter values suggested by the subcommittee on the next step divice. The former has RF devices for current drive and heating while the latter employs NBI. The candidates of ACS (Advanced Option-C with Single-null) and ACD (Advanced Option-C with Double-null) employ advanced engineering parameters in order to reduce reactor size. The former has single null divertor option while latter double null divertor option. The Cost-Mini has the most advanced parameters for engineering design and expects only in-situ remote operation for the reactor maintenance. The Inter-Link employ normal conducting OH coil which is interlinked with TF coil.

The specifications and major parameters of ACS and Option C design are shown in Tables A.2 and A.3, respectively. In addition, the design basis for heat and particle fluxes and erosion is shown in Table A.4.

Table A.1 Plasma Parameters

Type	Option C	ACS	ACD	Mini	Inter-link	NBI-R
R(m)	4.92	4.42	4.02	3.84	4.74	
a(m)	1.32	1.25	0.95	1.02	1.67	
A	3.7	3.54	4.24	3.76	2.84	
κ	1.7	1.7	2.0	2.0	1.7	
δ	0.2	0.2	0.35	0.2	0.2	same as
B_T(T)	4.68	4.61	5.07	4.58	3.08	opt. c
Ip(MA)	8.69	8.74	7.96	8.37	10.6	
T(keV)	12.0	12.0	12.0	12.0	12.0	
β_T(%)	4.94	5.31	5.79	6.28	7.22	
β_{DT}(%)	4.02	4.31	4.70	5.10	5.87	
$n_e(m^{-3})$	1.09×10^{20}	1.14	1.50	1.33	0.69	
$n_i(m^{-3})$	0.98×10^{20}	1.03	1.35	1.19	0.62	
q_ψ	2.6	2.6	2.6	2.6	2.6	
q_I	1.98	1.92	2.13	1.97	1.76	
P_f(MW)	459	406	435	375	286	
$P_w(MW/m^2)$	1.03	1.07	1.47	1.23	0.53	
null	Single	Single	Double	Single	Single	
elongation	κ=1.7	κ=1.7	κ=2.0	κ=2.0	κ=1.7	
Magnet level	I	I~II	I~II	I~II	I~II	

Table A.2 FER Design Specifications

No.	Items	ACS	Option C
1.	MAGNET SYSTEMS		
1.1	Toroidal magnets		
	Conductor	$(NbTi)_3Sn$	←
	Replaceability	Semi-permanent	←
	Cooling	Forced flow	←
	Stabilizer	Copper	←
	Conductor support	Stainless steel; co-wound sheath and case	←
	Insulation	Glass-reinforced plastic	←
	Toroidal field direction	Counter-clockwise, seen from above	←
1.2	Poloidal magnets		
	Replaceability	Semi-permanent	←
	Cooling	forced flow	←
	Location/material	All coils external to TF coils are superconducting (NbTi) and/or $(NbTi)_3Sn$ except for plasma position control coils which are of copper, may be segmented and internal to TF coil	←
	Conductor support	Stainless steel, co-wound sheath and case	←
	Plasma current direction	Counter-clockwise, seen from above	←
	Insulation	Glass-reinforced plastic	←
1.3	Cryostat		
	Replaseability	Semi-permanent	←
	Material	Stainless steel	←

Table A.2 FER design Specifications (Cont.)

No.	Items	ACS	Option C
	Configuration	All superconducting coils are in a single, self-contained cryostat	←
		Combined vacuum boundary for torus and magnets	←
2.	HEATING SYSTEM		
	Primary option:		
	Type	Ion cyclotron heating	←
	Number of dedicated bays	1	2
	Heating mode	2nd harmonic D	←
3.	RF-ASSISTED START-UP		
		3 MW ECRH (120 GHz, outboard launch)	←
		1 dedicated bay	←
3a.	CURRENT DRIVE		
	Type	Lower hybrid waves	←
	Power	20 MW	←
	Frequency	2 GHz	←
4.	VACUUM SYSTEM		
	Type of pumps	Compound cryosorption plus mechanical and turbo-molecular for roughing	←
	Location	Chamber pumped through divertor	←
5.	POWER SUPPLIES		
		Direct from utility line for steady-state loads	←

Table A.2 FER design Specifications (Cont.)

No.	Items	ACS	Option C
		Motor generators for pulsed loads (RF equipment, PF coils)	←
6.	FUELLING SYSTEM		
6.1	Gas puffing		
		Not specified, but probably in divertor chamber	←
6.2	Pellet injection		
	Type of injectors	Centrifugal or pneumatic + accelerator	←
	Location of injections	Mid-plane, one bay	←
7.	POWER AND PARTICLE EXHAUST SYSTEMS		
		Single-null poloidal divertor with chamber at bottom	←
		12 replaceable divertor modules	←
	Collector plate	Low plasma temperature at plate, W bonded to copper alloy or C	←
	Collector plate replaceability	Replaceable with divertor module	←
	Channel wall material	Stainless steel, with other materials in high-particle-flux regions	←
	Coolant	water	←

Table A.2 FER Design Specifications (Cont.)

No.	Items	ACS	Option C
8.	FIRST-WALL/LIMITER SYSTEM		
8.1	First wall		
	Structural material	Stainless steel	←
	Coolant	Water	←
	Design concept:		
	Outboard	Panel-type construction, internal with movable shield	←
	Inboard	Panel-type construction, integral with semi-permanent shield	Panel-type, integral with movable shield
	Passive stabilizing circuit	High-electrical-conductivity loop around sector	←
	Replacement:		
	Outboard	Replaceable with movable shield	←
	Inboard	Not replaceable	Replaceable with movable shield
8.2	Protection limiter		
	Armor material	Graphite or C/C	←
	Coolant	Water	←
	Design Concept:		
	Inboard	12 replaceable protection limiters by vertical access	←
		Coverage 20% on inboard first wall region	←
		Graphite bonded to stainless steel	←

Table A.2 FER Design Specifications (Cont.)

No.	Items	ACS	Option C
		Replaceable without vent of of plasma vacuum chamber	←
	Upper side	12 replaceable protection limiters by horizontal access	←
		Coverage 100% on upper side region	←
		Graphite bonded to copper alloy	←
9.	TRITIUM-BREEDING BLANKET SYSTEM		
		No blanket	
10.	SHIELD SYSTEM		
	Materials	SS, H_2O	←
	Coolant	H_2O	←
	Structure	Special shielding around penetration through bulk shield	←
		Combined with vacuum boundary	←
			←
		Thin plates used for electrical conductivity control	←
11.	TRITIUM SYSTEM		
	Plasma exhaust reprocessing		←
	Purification	Palladium diffusion	←
	Isotopic separation	Cryogenic distillation	←
	Blanket test module processing	Helium purge gas	←
	Cold trapping and electrolysis		←

Table A.2 FER Design Specifications (Cont.)

No.	Items	ACS	Option C
	Atmospheric recovery		←
	Catalytic oxidation and molecular sieves		←
12.	MECHANICAL CONFIGURATION		
		12 removable torus sectors which can be removed with straight-line horizontal motion through windows between TF coils	←
		Semi-permanent inboard, upper and lower shield forming the primary vacuum boundary on the inner surface	←
		Final closure of primary vacuum boundary with respect to the access bay is on the outer boundary of removable torus sectors	←
		Engineering blanket test modules inserted horizontally	←
		Vacuum pumping ducts provide location for gravity support for torus	←
13.	STRUCTURAL SUPPORT SYSTEM		
13.1	Toroidal field coils	Bucking cylinder used to handle in-plane hoop stresses and centering forces	←

Table A.2 FER Design Specifications (Cont.)

No.	Items	ACS	Option C
		Shear keys at inner leg, mechanically attached reinforcing members, and intercoil support structure used to handle out-of-plane forces and overturning moments	←
		Gravity support to floor	←
13.2	Poloidal field coils		
		Structural attachment to TF system	←
13.3	Vacuum vessel		
		Structure support isolated from TF coils and directly to floor	←
13.4	Blanket		
		No blanket	←
13.5	Shield		
		Bulk shield support directly to floor	←
13.6	First wall		
		Attached to removable torus sector on outboard	←
		Attached to fixed torus on inboard	Attached to removable torus sector on inboard
13.7	Cryostat		
		Support directly to floor	←
13.8	Design standard		
		ASME code	←

Table A.2 FER Design Specifications (Cont.)

No.	Items	ACS	Option C
14.	CRYOGENICS		
		Design based on forced-flow cooling of magnets	←
15.	ENGINEERING TESTING FACILITIES		
		Horizontal access for test-module insertion	←
		Channels penetrating to plasma for surface tests	←
		Channels penetrating to first wall for material and other tests	←
16.	REMOTE ASSEMBLY/DIS-ASSEMBLY		
		Ground-base equipment for reactor disassembly	←
		Crane and truck transport from reactor to hot cell	←
17.	LAYOUT OF FACILITIES		
	Allocation of torus access:		←
	Dedicated bays		
		One for ICRH	Two for ICRH
		One for ECRH	←
		One for LHRH	←
		One for fueling	←
		Four for testing	Three for test-ing
		Two for diagnostics and instrumentation control	←
		Two for maintenance	←

TABLE A.3 FER MAJOR PARAMETERS

Items	ACS	Option C
1. GEOMETRY		
Chamber major radius (R)	4.37 m	4.87 m
Plasma major radius	4.42 m	4.92 m
Plasma chamber radius (r_w)	1.40 m	1.47 m
Plasma radius (a)	1.25 m	1.32 m
Plasma elongation, average (K)[a,b]	1.7	←
upper	1.4	
lower	2.0	
Plasma triangularity, average (γ)[a,b]	0.2	←
upper	0.12	
lower	0.28	
Aspect ratio (A)	3.54	3.7
Plasma chamber volume[c]	317 m^3	393 m^3
Plasma volume	232 m^3	288 m^3
Plasma chamber area[c]	393 m^2	456 m^2
Plasma surface area	304 m^2	358 m^2
2. PLASMA		
Average ion temperature (<Ti>) and electron (<Te>)	12 keV	←
Average D-T ion density ($\langle n_i \rangle$)	1.03×10^{20} m^{-3}	0.98
Average electron density ($\langle n_e \rangle$)	1.14×10^{20} m^{-3}	1.09×10^{20} m^{-3}
Energy confinement time (τ_E)[d]	2.21 s (1.7)*	2.32 s (1.77)*
Safety factor (separatrix)(q_I)[b]	1.8	1.8
Effective charge (Z_{eff})	1.5	←
Field on plasma axis (B_T)	4.61 T	4.68 T
Plasma current (I_p)	8.74 MA	8.69 MA

a. The plasma shape is defined by the form of the separatrix, as given in Fig. A.1.
b. For definition, see Chapter III of Phase One report.
c. Excluding divertor.
d. At the working point, with burn control, neglecting alpha-particle and impurity corrections to the energy density.
* Defined as $3\, n_{DT} K T_i$/(Alpha power, plus external heating power/Plasma volume).

TABLE A.3 FER MAJOR PARAMETERS (Cont.)

Items	ACS	Option C
Toroidal field ripple (δ)[b,e]		
Edge	0.75%	0.75%
Centre	-	-
Fast alpha loss	≤10%	≤10%
Beta toroidal burn average (β)[b,f]	5.31%	4.95%
Beta poloidal (β_I)[b]	1.04	1.12
Beta, DT (β_{DT})[††]	4.31%	4.02%
OPERATING MODE		
Loop voltage during burn	0.035 [V]	
Peak thermonuclear power (P_{th})	406 MW(th)	459 MW (th)
Burn time (t_{burn})	800 s	800 s
Dwell time (t_{dwell})	} 200-300 s	} 200-300 s
Startup and shutdown time (t_{ss})		
Number of pulses	1.8×10^4	1.8×10^4
Maximum availability goal (varies with time, see FER operating schedule)	7% average for 5 years -100% for several days	←
3. PLASMA DISRUPTIONS		
Major Disruptions		
Frequency Stage I	$\}5\times10^{-2}$	←
Stage II		
Stage III	1×10^{-2}	
Energy content		
Thermal	145 [MJ]	
Magnetic	87 [MJ]	
Thermal quench		
- Time	5 [ms]	
First wall	0	

e. All values are for peak/average maximum.
f. Allows -1% for impurity and alpha contributions

TABLE A.3 FER MAJOR PARAMETERS (Cont.)

Items	ACS	Option C
- Peaking factor	-	
- Peaking energy flux	-	
Divertor plate[g]	58 MJ	68 MJ
- Increased with of diver channel	normal width	←
Current quench		
- Time	15 [ms]	
First wall	174 [MJ]	
Peaking factor	≈ 1.7	
Uniform on first wall[h]	87 MJ	99 MJ
Local on first wall	87 MJ[j]	99 MJ
Peak energy flux		
To Divertor[k]	683 J/cm²	-
To guard limiter	715 J/cm²	-
To inboard bare S.S. F/W	81 J/cm²	-
Without guard limiter	210 J/cm²	
Exceptional case		
Frequency Stage I	-	-
Stage II	-	-
Total energy deposited per disruption	-	-
Uniform on first wall[h]	-	-
Local on first wall[j]	-	-
Time for energy deposition	-	-
Peak energy flux		
First wall[f]	-	-
Frequency Stage I	-	-
Stage II	-	-
Total energy deposited per disruption	-	-
Divertor[g]	-	-
Peak energy flux to divertor[k]	-	-

g. Distributed on an energy flow channel 3 times wider than during normal operation
h. Radiation
i. On 30 m² at the center of the inboard wall
j. To 30% of the first wall with an additional peaking factor 2
k. Perpendicular to separatirx

TABLE A.3 FER MAJOR PARAMETERS (Cont.)

Items	ACS	Option C
Time for energy deposition	-	-
4. TOROIDAL FIELD COILS		
Number	12	←
Conductor	$(NbTi)_3Sn$	←
Stabilizer	Cu	←
Maximum field (B_{max})	12 T	←
Bore height[k2]	8.6 m	9.4 m
Bore width[k2]	6.5 m	7.2 m
Total nuclear heating	35 kW	7 kW
Maximum radiation on insulator	2×10^8 rad	9×10^7 rad
Average conductor current density[1]	36 A/mm²	30 A/mm²
Maximum allowable stray field	$<10^{-2}$ T	←
5. POLOIDAL FIELD SYSTEM		
Total volt-seconds required	50 Vs	←
PFC conductor	NbTi and/or $(NbTi)_3Sn$	←
PF location (relative to TF)	outside	←
PF maximum allowable field at coil	12 T	10 T
PF maximum allowable field rise	3 T/s	←
RF current ramp time[m]	100-200 s	←
Break-down voltage	10 V for 1 s	←
Maximum allowable stray field at break-down	$\leq 10^{-2}$ T	←
Field penetration time (e-folding)		
Break-down voltage[n]	~300 ms	←
Radial field for vertical position control[n]	~50 ms	←

k2. Full bore of the container.
1. Area including conductor, stabilizer and coolant flow channels, but not major structure.
m. See design basis operating scenario.
n. To be consistent with torus electronmagnetic requirements.

TABLE A.3 FER MAJOR PARAMETERS (Cont.)

Items	ACS	Option C
Distance of passive 'shell' from separatrix (for vertical position control)	-0.15 m	←
Maximum rate of vertical field change in plasma	-0.1 T/s	←
6. HEATING TO IGNITION		
Technique	ICRH+LH*,NBI*,+	←
Mode	2nd harmonic D electrons	←
Number of launchers	ICRH;1,LH;1	ICRH;2,LH;1
Frequency	70 MHz, 2 GHz	←
Power (P_{rf}) at start-up	20 MW+20 MW	25 MW+20 MW
Power/area	ICRH;8.5 $MW \cdot m^{-2}$	5.5 $MW \cdot m^{-2}$
	LH; 50 $MW \cdot m^{-2}$	←
Port size	2.3 m^2	←
Pulse length for ignition	20 s	←
Pulse length capability	cw	←
7. START-UP ASSIST-ECRH		
Technique	ECRH	←
Mode	1st harmonic, ordinary mode	←
Number of launchers	1	←
Frequency	120 GHz	←
Power	3 MW	←
Power/area (in waveguide)	70 $MW \cdot m^{-2}$	←
Port size (plasma interface)	1.3m×1.8m	←
Pulse length for start-up assist	3 s	←
Pulse length capability	cw	←

* No choice of heating method made yet.

\+ NBI detail specifications are listed under current ramp-up and transfomer recharge.

TABLE A.3 FER MAJOR PARAMETERS (Cont.)

Items	ACS	Option C
8. CURRENT RAMP-UP AND TRANSFORMER RECHARGE		
8.1 RF SYSTEM		
Technique	LHRF	←
Mode	electrons	←
Number of launchers	1	←
Frequency	2GHz	←
Power	20 MW	←
Power/area (in waveguide)	50 $MW \cdot m^{-2}$	←
Pulse length for current ramp-up	100 - 200 s	←
8.2 NBI SYSTEM		
Technique	NBI	←
Number of Beam Line	3	←
Energy	0.25-0.5MeV(D^-)	←
Power	60 MW	←
Power/area (port)	40 MW/m^2 for non profile control	←
	20 MW/m^2 for porfile control	←
Pulse length for current ramp-up	100 - 200 s	←
9. STEADY STATE NON-INDUCTIVE CURRENT DRIVE		
Technique	not yet selected	
Number of launchers		
Frequency (RF)/Energy (NB)		
Power		
Power/area(in wave-guide/beam duct)		

TABLE A.3 FER MAJOR PARAMETERS (Cont.)

Items	ACS	Option C
10. FIRST WALL		
Peak surface heat flux	0.33 MW/m^2	–
Protection	Graphite	←
Structural material	SS	←
Inboard thickness	5 mm	←
Outboard thickness	5 mm	←
Coolant	H_2O	←
Maximum temperature of structure	205°C	←
Average neutron wall load	1.0 MW/m^2	1.1 MW/m^2
Design fluence, inboard[o]	0.3 $MW \cdot a/m^2$	←
outboard [o]	0.3 $MW \cdot a/m^2$	←
Bakeout temperature	150°C	←
11. DIVERTOR PLATE		
Surface material[p]	W (or C)	←
Heat sink material	Cu	←
Coolant	H_2O	←
Coolant temperature(inlet/outlet)	50/75°C	←
Lifetime	full litetime (0.3 $MW \cdot Y/m^2$)	←
12. SHIELD		
Inboard material	SS, H_2O	←
Inboard thickness[q]	0.67 m	0.78 m
Outboard material	SS, H_2O	←
Outboard thickness	~5m(0.5mSS+H_2O)	1.55 m
Coolant	H_2O	←

o. Target: full lifetime
p. See design specification
q. Bulk shield thickness, excluding inboard gaps, dewars, and insulation.

TABLE A.3 FER MAJOR PARAMETERS (Cont.)

Items	ACS	Option C
Maximum temperature of structure	150°C	←
Dose limit, 24 hours after shut-down[r]	2.5 mrem/h	←
13. TEST FACILITIES		
Type	Modules, segment channels	←
Location	Outboard	←
Required surface area	9.36 m^2	←
14. TRITIUM FUELLING SYSTEMS		
Tritium flow rate	21 $g \cdot h^{-1}$	24 $g \cdot h^{-1}$
Consumption (at 25% availability)	0.12 $kg \cdot a^{-1}$ (phase 2)	←
	1.2 $kg \cdot a^{-1}$ (phase 3)	←
Tritium clean-up time	-	-
Fractional burn-up	5%	←
External tritium fueling rate	1.5×10^{21} s^{-1}	1.7×10^{21} s^{-1}
15. TRITIUM BREEDING BLANEKT		

r. On the outer surface of the bulk shield

TABLE A.3 FER MAJOR PARAMETERS (Cont.)

Items	ACS	Option C
16. TRITIUM INVENTORY		
Tritium handling systems	~200 g	←
Breeding blanket	1.2-17 g (blanket test module)	←
First wall divertor	~260 g	←
Storage	1.5 kg	←
Total	~2 kg	←
17. VACUUM SYSTEM		
Vacuum boundary material	SS	←
Plasma chamber exhaust composition		
D-T in molecular form	93%	←
He	5%	←
Other	2%	←
Initial base pressure	10^{-8} torr	←
Pre-shot base pressure	10^{-5} torr	←
Gas pressure (room temperature) in divertor chamber during burn	-	-
Pumping speed at entrance of divertor chamber pumping duct, for He and D-T, during burn	1×10^{5} ℓ/s	←
18. CRYOGENIC REQUIREMENTS		
Liquid He inventory	300 m^3 (1)	
Liquid N_2 inventory	460 m^3 (1)	450 m^3 (1)
He liquefying requirment	4 m^3/h	←
He refrigerator capacity	80 kW	50 kW
N_2 liquefier capacity	19 m^3/h	18 m^3/h

(1) Container volume in cryogenic system.

TABLE A.3 FER MAJOR PARAMETERS (Cont.)

Items	ACS	Option C
19. POWER SUPPLY		
Stationary loads	~200 MW	
Energy storage (PF Coil)	6 GJ	12 GJ
20. PARTICLE EXHAUST AND FUELLING		
Exhaust rate of helium [10^{20} atoms/s]	1.44	1.63
Flux to divertor target		
- D/T ions [10^{24} ions/s]	4	←
- He ions [10^{23} ions/s]	2.2	←
He concentration in exhaust gas (%)	5	←
Concentration of low Z impurities [%]	O, C = 0.5	←
Fuelling rate [10^{21} D/T atoms/s]	2.96	3.35

TABLE A.4 DESIGN BASIS FOR HEAT AND PARTICLE FLUXES AND EROSION

Items	ACS	Option C
(1) Conditions in scrape-off plasma		
- Non-radiated input power [MW]	53	-
- Plasma density [$10^{19}/m^3$]	2 to 5	←
- Plasma temperature, T_e/T_i [eV]	100 to 200 ($T_e=T_i$)	←
- Plasma temperature at divertor plate[eV]	20($T_e=T_i$)	←
- Shortest distance null-point to divertor target [m]	> 0.1	←
(2) First-wall		
Neutrons [MW]	325	368
Plasma (uniform distribution)		
- Radiation [MW]	≈ 20	←
- Charge exchange atoms [MW]	3	←
- Flux density of c.x. atoms [$10^{20}/m^2/s$]	100(near divertor)	←
- Average energy of charge-exchange neutrals [eV]	60(near divertor) -200	←
- Wall material	Stainless steel, graphite	←
- Release rate of wall atoms[$10^{18}/m^2/s$] (Physical sputtering plus radiation enhanced Sublimation - of C -)	15 (ss) 105 (c)	←
- Erosion (neglecting tedeposition) [m/s]	1.8×10^{-10} (ss)	-
	1.2×10^{-9} (c)	-
- Fast α-particles [% of α-power]	≤ 10%	←
- Peak power load of α-particles [MW/m^2]	-	-

TABLE A.4 DESIGN BASIS FOR HEAT AND PARTICLE FLUXES AND EROSION(Cont.)

Items	ACS	Option C
(3) Divertor		
Target material	W (or C)	←
Angle of inclination to magnetic surfaces (inner/outer) [°]	20/16	-
Power to each divertor channel (inne/outer) [MW] (kinetic energy of DT plasma)	= 25/25	-
Uniform radiation from main plasma and divertor [MW]	3.0	-
Peak power load at inclined target (inner/outer) [MW/m²]	2/2	-
Peak power load to outer plate[a]	7.2 MW/m²	-
Peak power load to inner plate[b]	5.9 MW/m²	-
Profile of power load (width of half-height: inner/outer) [10^{-2} m]		
(Exponential decay perpendicular to magnetic surfaces: ouboard/inboard of separatrix) [10^{-2} m]	8/4 (outer) 4/12 (inner)	← ←
Ion flux to targets		
Outer [10^{24}/s]	2	←
Inner [10^{24}/s]	2	-
Release rate of atoms (each target) (Physical sputtering; inner/outer)[10^{19}/s]	-	-
Peak release rate (each target) [10^{19}/m²/s]	1.7/1.7 (W)	-
Peak erosion rate (excluding redeposition) (inner/outer) [10^{-11} m/s]	26/26 (W) 4000/4000 (C)	
(4) Divertor chamber/throat		
Material	TBD	←
Neutral particle power load [MW]	-	-
Peak neutral particle load [kW/m²]	-	-
Radiation (uniform) [MW]	-	-

a. Target perpendicular to magnetic surface.
b. Exponential decay length perpendicular to magnetic surface.

TABLE A.4 DESIGN BASIS FOR HEAT AND PARTICLE FLUXES AND EROSION(Cont.)

Items	ACS	Option C
(5) Start-up limiter		
Major radius [m]	4.4	4.9
Width [m]	1	←
Poloidal configuration	upper region of first-wall	←
Toroidal configuration (Symmetric = Sm)	nearly 100%	←
Total power to limiter[MW]	20	←
Duration [s]	100 to 200	←
Peak power load [MW/m^2]	1.1	←
Profile of power load	Gaussian	←
Total ion flux to limiter [$10^{22}/s$]	1.16	-
Total release rate of limiter atoms [$10^{19}/s$]	-	-
Peak erosion rate [$10^{-11}m/s$]	4.9	-
Typical particle energy [keV]	6.2	←

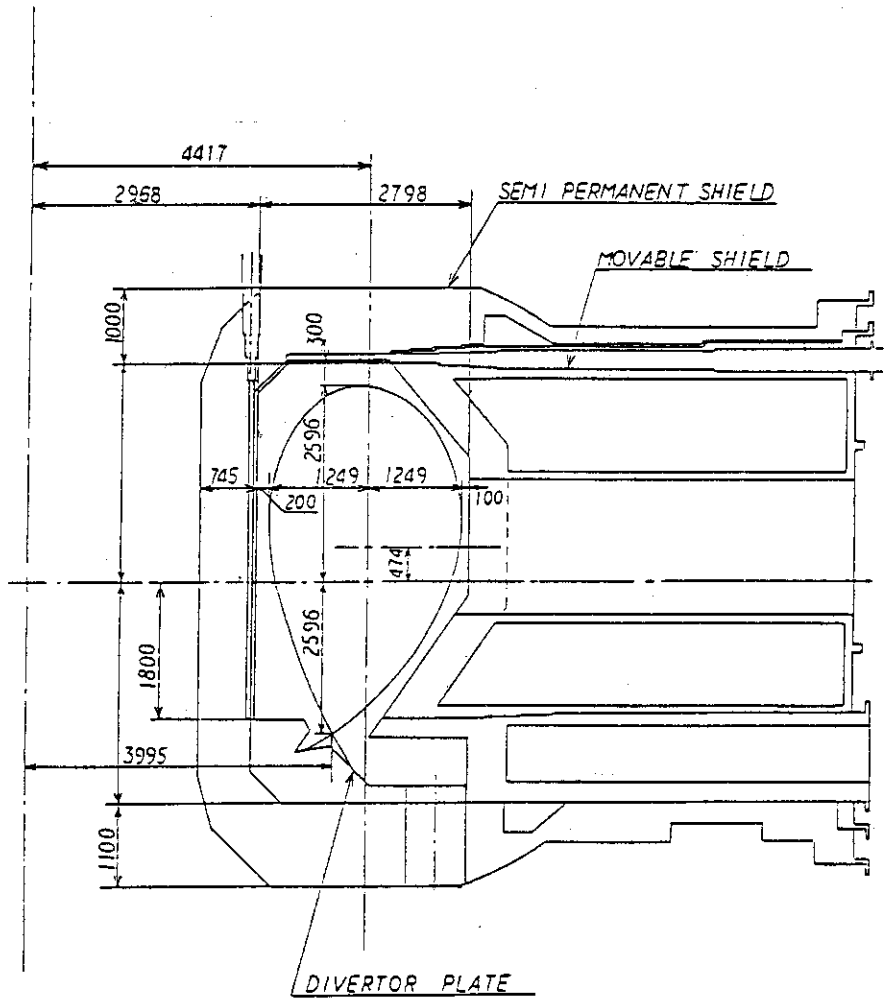

FIG. A.1 Cross-section of the toroidal chamber (dimension in millimeter)