JAERI-M
89-201

JAERI CONTRIBUTION TO THE SECOND NEACRP BENCHMARK CALCULATION ON HIGH CONVERSION LIGHT WATER REACTOR LATTICES

December 1989

Keisuke OKUMURA, Yukio ISHIGURO
Ken-ichi TANAKA* and Chang-Joon JEONG**

日本原子力研究所
Japan Atomic Energy Research Institute

JAERI-M レポートは，日本原子力研究所が不定期に公刊している研究報告書です。
入手の問合わせは，日本原子力研究所技術情報部情報資料課（〒319－11茨城県那珂郡東海村）あて，お申しこしください。なお，このほかに財団法人原子力弘済会資料センター（〒319-11茨城県那珂郡東海村日本原子力研究所内）で複写による実費頒布をおこなっております。

JAERI-M reports are issued irregularly.
Inquiries about availability of the reports should be addressed to Information Division, Department of Technical Information, Japan Atomic Energy Research Institute, Tokai-mura, Naka-gun, Ibaraki-ken 319-11, Japan.

編集兼発行　日本原子力研究所
印　　刷　日立高速印刷株式会社

JAERI Contribution to the Second NEACRP Benchmark Calculation on High Conversion Light Water Reactor Lattices

Keisuke OKUMURA, Yukio ISHIGURO, Ken-ichi TANAKA*
and Chang-Joon JEONG**

Department of Reactor Engineering
Tokai Research Establishment
Japan Atomic Energy Research Institute
Tokai-mura, Naka-gun, Ibaraki-ken

(Received November 6, 1989)

It was determined to perform the second NEACRP benchmark calculation on High Conversion Light Water Reactor(HCLWR) lattices at the 31st NEACRP meeting on October, 1988. The object was to clarify the physics problems included in the data and method on HCLWR lattice analyses and also to obtain the reference solutions for deterministic codes by using continuous energy Monte Carlo codes. In the new problems, the analysis for the PROTEUS-LWHCR experiments were added.

JAERI participated in this benchmark comparison by use of the VIM code (Monte Carlo method) and the SRAC code (collision probability method) with the libraries based on the JENDL-2 file. In this report, all of the calculated results are summarized. Some additional investigation will be also shown on resonance treatment and geometrical modelling relevant to the benchmark calculation.

Keywords: High Conversion Light Water Reactor, NEACRP, Benchmark Calculation, PROTEUS, SRAC, VIM, JENDL-2, Resonance Treatment

---

* On leave from CSK Corp.

** Korea Advanced Energy Institute (in the course of the STA Scientist Exchange Program sponsored by the Science and Technology Agency of Japan)

第２回ＮＥＡＣＲＰ高転換軽水炉格子ベンチマークに対する原研の計算結果報告

日本原子力研究所東海研究所原子炉工学部
奥村　啓介・石黒　幸雄・田中　健一*・鄭　　昌俊**

（１９８９年11月６日受理）

１９８８年10月，第31回ＮＥＡＣＲＰ会合において，第２回高転換軽水炉格子に関するベンチマーク計算が行われることが決定された。それは，高転換軽水炉格子解析上のデータ及び計算手法に内在する炉物理上の問題点を明らかにするとともに，連続エネルギー・モンテカルロコードを使用して，決定論的手法に基づくコードに対する参照解を与えることを目的としている。新しい問題には，ＰＲＯＴＥＵＳ－ＬＷＨＣＲ実験に対する解析も追加されている。

原研は，ＶＩＭ（モンテカルロ法）とＳＲＡＣ（衝突確率法）コード及びＪＥＮＤＬ－２ライブラリーを使用してこれに参加した。本報告書には，これらすべての計算結果がまとめられている。また，ベンチマーク問題に関連した共鳴の取り扱い及び幾何形状モデルに関する補足検討結果も示される。

東海研究所：〒319-11 茨城県那珂郡東海村白方字白根２－４
＊　株式会社 CSK
＊＊　韓国エネルギー研究所（科学技術庁のＳＴＡ交流制度研究員）

Contents

目　　次

1. Introduction

Recently much R&D effort has been made for High Conversion Light Water Reactor (HCLWR) with tight pitch lattice made of mixed-oxide (MOX) fuel pins[1-26]. It aims to improve uranium utilization in LWRs without major change of the plant design. The HCLWR has the following two design features, as compared with a conventional LWR : (a) reduced volume ratio of moderator to fuel (V_m/V_f) and (b) higher fissile plutonium enrichment. Both of the features make the void coefficient of reactivity positive or less negative[16,23,26]. This is one of the critical issues for the HCLWR core design. Furthermore, the reactivity loss along burnup become smaller than that of LWR because of high conversion. Therefore, more accurate data and methods are requested for HCLWR lattice analyses to evaluate burnup performance and safety margin concerned with the void coefficient.

The idea of the HCLWR was originally suggested by M.C.Edlund in 1975[27]. After that, feasibility studies have been made by many institutes but unacceptable differences have been observed for main reactor physics parameters especially in the void coefficient[28-30]. The reduced V_m/V_f results in hardening of neutron spectrum. The shape of the neutron spectrum is between those of thermal neutron reactor and fast breeder reactor. The HCLWR is, so to speak, an intermediate or resonance neutron spectrum reactor. The calculational treatment of resonance energy region becomes more and more important.

We had not had, however, any sufficient experience of analyses for such kinds of reactors. It was not sure that the data and methods which had been used for analyses of a current LWR or a FBR were always appropriate to the HCLWR analyses. In addition, It is quite recent that we have been able to obtain some experimental data on HCLWR lattices with MOX fuel, to which we could refer for comparison with calculational results. That is, we had not obtained any experimental data until the PROTEUS-LWHCR (Phase-I) experiments were carried out at PSI (previously EIR), 1981-1982[31-34]. At the Fast Critical Assembly (FCA) of JAERI, a series of integral physics experiments on HCLWR lattices have been carried out since 1986, and valuable experimental data have been accumulated[35,36].

On the other hand, benchmark calculations had been performed with emphasis on burnup data among JAERI and some LWR fabricators in Japan. On the basis of analyses for these experiments and of the benchmark

calculations, some problems on data and methods were pointed out and reflected on the improvements of the data[18,37,38] and methods[39-41] in our design code SRAC[42,43].

In 1986, an international benchmark of tight lattice cell burnup calculation was proposed by JAERI in order to extract further problems included in the data and methods and to accelerate their development activities. It was approved at the 29th meeting of the Nuclear Energy Agency Committee on Reactor Physics (NEACRP) 22-26 September, 1986[44]. Fifteen organizations from eight countries submitted the twenty sets of benchmark results. The detailed results had been summarized in Ref.45. There were still unacceptable differences among the calculated results. For example, the range of deviations was about 3% for k_∞, up to about 8% for conversion ratio and about 7%$\Delta k/k$ for void reactivity. To clarify the deviations, it was recommended to perform additional benchmark calculations with continuous energy Monte Carlo codes to obtain reference solutions, in the specialist-meeting[45], at NEA Data Bank 19-22 April, 1988. The second benchmark comparison on HCLWR lattices was approved at the 31st NEACRP meeting held at Oarai, Japan 17-21 October, 1988.

In this report, our solutions calculated by the VIM[46] code and by the SRAC code with the libraries based on the JENDL-2 file will be presented. All of the results were submitted to the second specialists' meeting of the HCLWR burnup benchmark, which was held at NEA Data Bank 7-9 June, 1989. Some additional investigations will be also shown on resonance treatment and geometrical modelling.

2. Benchmark Specifications

The new benchmark consists of two kinds of problems. One is the analysis for the PROTEUS-LWHCR experiment (Cores 1 ~ 6). The experiment is known as the first trial of integral physics experiment for HCLWR lattices. The PROTEUS analysis was not employed in the previous benchmark problems because of their complex lattice arrangements for most of the deterministic codes. The other is the cell calculation for the same model as employed at the previous benchmark calculation, namely for the unit hexagonal lattices of MOX pin. This problem is identical to the previous one as far as the case at the beginning of burnup life (BOL) is concerned. The calculation of burnup depletion is not included in this problem. Instead of it, cell calculations should be performed for the end of burnup life (EOL) assuming fuel compositions including some fission products and minor actinides which play an important role in the intermediate neutron spectrum. The details of the new benchmark specifications were arranged by W.Bernnat(IKE Stuttgart) and J.Stepanek(PSI Würenlingen). They are shown in the followings:

Nuclear Energy Agency Committee on Reactor Physics (NEACRP)

HCLWR Burnup Benchmark at BOL and EOL Conditions

W. Bernnat and J. Stepanek
IKE Stuttgart PSI Würenlingen

1 General

At the Benchmark Meeting, 19th - 22nd April, 1988, it was recommended to perform Monte Carlo calculations with different codes and data bases in order to obtain reference solutions for the BOL and EOL cases [1].
In order to validate the codes and data bases in respect to typical HCLWR spectra (moderated and not moderated) the test lattices cores 1 - 6 of the PROTEUS Phase I experiments should be calculated too [2] [3].
Participants who are not carrying out the Monte Carlo calculations may use their production run codes containing the latest developments. The quality of these codes for HCLWR design can then be checked against reference solutions.

2 Specification of PROTEUS Phase I Lattices

The PROTEUS core 1 - 6 lattices are specified in Fig.1 and Table 1 respectively. For the Monte Carlo fundamental mode ($k_{eff} = 1$) calculations bucklings are specified in Table 1.a (together with the corresponding infinite multiplication factors).
These bucklings should be used as fixed values or better as starting values for manual or automatic iteration. Instead of a buckling a corresponding finite height (as given in Table 1.a) may be used for the cores 1 and 4 - 6. For the cores 2 and 3 ($k_\infty < 1$) $k_{eff} = 1$ can only be achieved by taking into account the negative buckling or by simulating a driver-zone (e.g. by an albedo > 1). (k_∞ and buckling values were calculated using WIMS-D with the JEF-1 library.)

3 Specification of HCLWR Lattices

The HCLWR lattice benchmark should be calculated at BOL and EOL both cases:
$V_m/V_f = 0.6$ (8 % Pu fiss.) and
$V_m/V_f = 1.1$ (7 % Pu fiss.).
The specification of the fuel lattice model is shown in the "HCLWR Burnup Benchmark Specification" Fig. 2 and Tables 2 and 3. These specifications are valid for the BOL case.
For the EOL case (50 GWd/t burnup) the number densities are listed in Table 4.

4 Requested Results for PROTEUS Phase I

4.1 Fundamental Mode Calculations

The calculations for the cores 1 - 6 should be performed for the fundamental mode ($k_{eff} = 1$) regarding a buckling or the finite height of the cell. If the search procedures for the fundamental mode calculations require too much effort, the bucklings of Table 1.a should be used. If the leakage of the PROTEUS I lattice can be only regarded by means of a finite cell height , for core 1 and 4 - 6 the heights given in Table 1.a and for the cores 2 and 3 an infinite height should be used.

4.2 Requested results

a) Core 1 - 6 two-rod heterogeneity factors for reaction rates

C_8 (capture U^{238})
F_8 (fission U^{238})
F_5 (fission U^{235})
F_9 (fission Pu^{239})
F_1 (fission Pu^{241})

Definition:
Ratio of given reaction rate (per atom) in the depleted UO_2 - rod to the same reaction rate in the 15 % PuO_2/UO_2 - rod. (Note that Pu^{239} and Pu^{241} are infinitely diluted in the UO_2 - rod.)

b) Core 1 - 6 lattice averaged reaction rate ratios and k_∞

C_8/F_9
F_8/F_9
F_5/F_9
F_1/F_9
k_∞ (defined as ratio of productions to absorptions in the fundamental mode ($k_{eff} = 1$) spectrum.)

Definition of the lattice-averaged reaction rate ratios:
Mean value of corresponding ratio for the two-rod types with a weighting proportional to the nuclide densities in the rods as well as to the (2 : 1) ratio in which the rods occur (only in cores 4, 5, 6).

5 Requested Results for the HCLWR Benchmark

⟹ The calculations for these benchmarks should be performed for the infinite cell (geometrical buckling $B_g^2 = 0$) as specified in Fig.2 and Tables 2, 3 and 4 (V_m/V_f =0.6 and 1.1).

<< Conversion ratio >>

the conversion ratio at the burnup stages 0 and 50 GWd/t.

The conversion ratio is defined as follows:

$$CR = \Sigma_c^{fcr}(t)/\Sigma_a^{fis}(t),$$

where $\Sigma_c^{fcr}(t)$ and $\Sigma_a^{fis}(t)$ stand for the one-group macroscopic cross-sections for capture of U^{238} and Pu^{240} and for absorption of U^{235}, Pu^{239} and Pu^{241} respectively at BOL and EOL.

<< Cross sections >>

One-group and three-group effective (cell-averaged) microscopic cross-sections (absorption, fission and production) of fuel materials at 0 and 50 GWd/t and of structural materials at zero burnup are required for the nuclides shown in Table 5.

<< Reaction rates >>

One-group and three-group fractional reaction rates for fuel and fission product nuclides at the burnup of 0 and 50 GWd/t.

In this calculation, the total absorption rate in a cell is normalized to unity. The absorption, fission and production rates are required for the fuel nuclides (Table 5), and the absorption rates for the 5 fission products (Table 5).

⟹ Void reactivity

Calculations shoud be performed for each cell in moderator voidage state for the two burnup stages BOL and EOL. The following results should be provided:

<< k_∞ and reaction rates >>

k_∞ and reaction rates when void fractions of the moderator are changed from 0 % to 45 %, 90 % and 99 % at the burnup of 0 and 50 GWd/t.

In these calculations the density of the moderator should be reduced to 55 %, 10 % and 1 % according to the void fraction. The one- and three-group fractional reaction rates should be calculated for the fuel isotopes and the total Fission Products.

$\Longrightarrow$ Migration area
Calculation of the migration area for a fixed value of $B^2 = 0.00060$ $[cm^{-2}]$ for case 1 and case 2 (0 % and 100 % void, BOL) should be carried out.

6 Monte Carlo Calculations

It is proposed that Monte Carlo calculations with the continuous Energy Monte Carlo Codes VIM together with ENDF/B-IV, -V and JENDL-2, TRIPOLI-2 with JEF-1 and MCNP with ENDFB/V and JEF-1 be performed. The statistical errors of the results should be given for all quantities calculated.

7 Code Descriptions

The following information should be provided:

- Treatment of unresolved resonances (method).
- Treatment of resolved resonances (number of points).
- Treatment of anisotropic scattering.
- Treatment of thermal scattering (scattering-law).
- Which cross-section processing code was used.
- How many particles were followed.
- Calculation of fission spectra.

For the purpose questionnaires are enclosed as an Annex.

8 References

[1] H. Akie, Y. Ishiguro, H. Takano, "Summary Report on the International Comparison of NEACRP Burnup Benchmark Calculations for High Conversion Light Water Reactor Lattices" October 1988, JAERI-M-88-200, NEACRP-L-309.

[2] R. Chawla, K. Gmür, H. Hager, R. Seiler, "LWHCR Moderator-Voidage Experiments" (PROTEUS-LWHCR Phase I Program: Cores 1-2-3)" NEACRP-A-584

[3] R. Chawla, K. Gmür, H. Hager, R. Seiler, "Further Investigations in the PROTEUS-LWHCR Phase I Program" (Cores 4-5-6) NEACRP-A-636

[4] R. Chawla, "A Review of Lattice Calculations for the PROTEUS-LWHCR Phase I Experiments" NEACRP-A-726

Fig.1: Test lattices for (a) PROTEUS/LWHCR Cores 1 (H_2O), 2 (Air), 3 (Dowtherm) and (b) Cores 4 (Dowtherm), 5 (Air) and 6 (H_2O). See Nucl. Technol., Vol. 67, pp. 360-380 (1984) and Vol. 73, pp. 296-305 (1986).

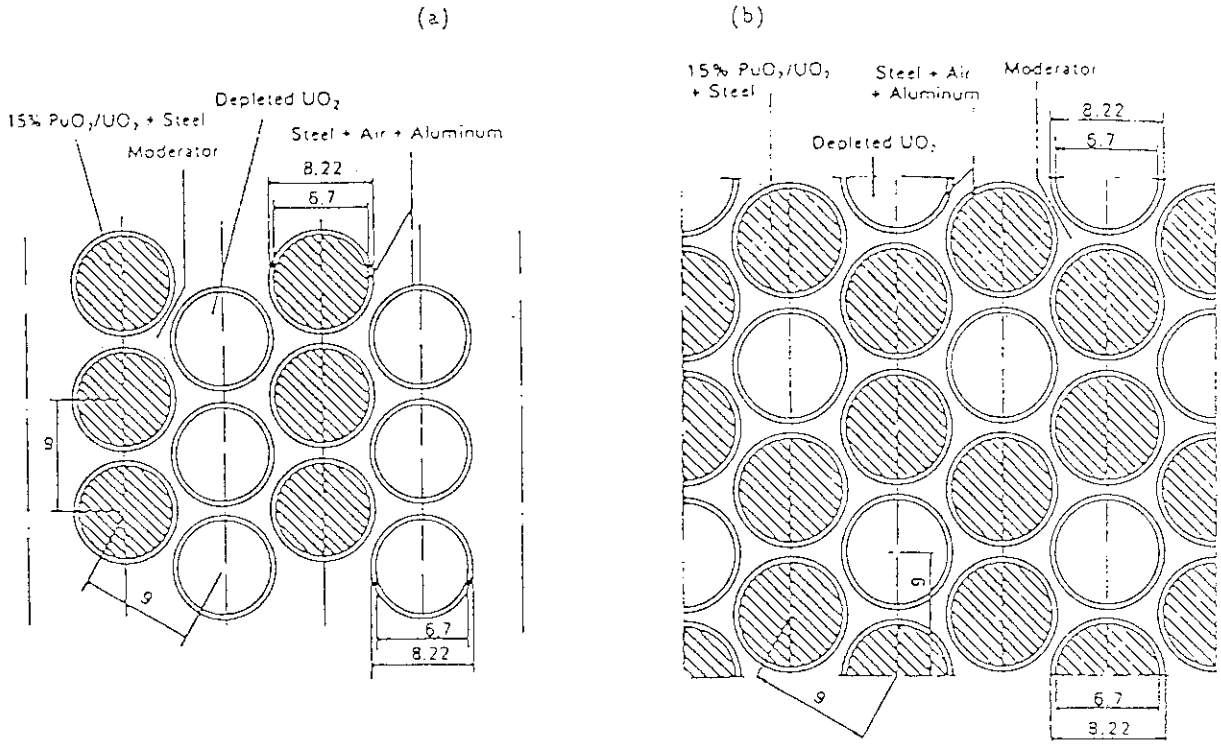

Table 1: Nuclide Densities ($\times 10^{30}$ m^{-3} for Test Lattice Materials in PROTEUS-LWHCR Cores 1-6

Material 1 (Fuel 1, 15% PuO_2/UO_2 + Steel)							
^{233}U	7.781-5*	^{234}U	1.839-2	^{239}Pu	2.580-3	^{240}Pu	5.699-4
^{241}Pu	5.675-5	^{242}Pu	1.256-5	^{241}Am	3.833-5	Oxygen	4.346-2
Hydrogen	2.005-4	Aluminum	3.683-4	Iron	2.600-3	Chromium	6.843-4
Nickel	3.301-4	Manganese	5.376-5	Silicon	3.286-5	Molybdenum	8.123-6
Material 2 (Fuel 2, Depleted UO_2)							
^{235}U	9.851-5	^{238}U	2.328-2	Oxygen	4.677-2	Aluminum	3.327-4
Material 3 (Clad, Steel + Air + Aluminum)							
Aluminum	6.080-3	Iron	3.125-2	Chromium	8.536-3	Nickel	5.118-3
Manganese	1.001-3	Molybdenum	7.354-4	Silicon	8.124-4	Nitrogen	1.323-5
Material 4 (Moderator)							
Core 1 (H_2O at 32°C):		Hydrogen	6.652-2	Oxygen	3.326-2		
Core 2 (Air/aluminum smear, 37 C):		Nitrogen	3.8-5	Oxygen	1.0-5	Aluminum	8.1-4
Core 3 (Dowtherm, 35°C):		Hydrogen	3.824-2	Carbon	4.578-2	Oxygen	2.832-3

*Read as 7.781×10^{-5}.

Core	B^2 [cm^{-2}]	k_∞	Height [cm]*
1 (H_2O)	6.6000×10^{-4}	1.035413	122.286
2 (Air)	-3.9323×10^{-4}	0.909163	infinite
3 (Dow)	-4.0663×10^{-4}	0.971428	infinite
4 (Dow)	8.6504×10^{-4}	1.061322	106.815
5 (Air)	4.4460×10^{-4}	1.104253	148.992
6 (H_2O)	1.7887×10^{-3}	1.096153	74.282

*(including extrapolation length)

Table 1.a: Bucklings and Infinite Multiplication Factors for PROTEUS Phase I Cores 1 - 6

HCLWR Burnup Benchmark Specification

Specification of Fuel Lattice Model

The simplified fuel cell model is shown in Fig.2 . The material properties and compositions are shown in Tables 2 and 3.

Group Cross-section Libraries

The participants should use their own cross sections libraries and group structures.

Fig.2: Unit Cell Model

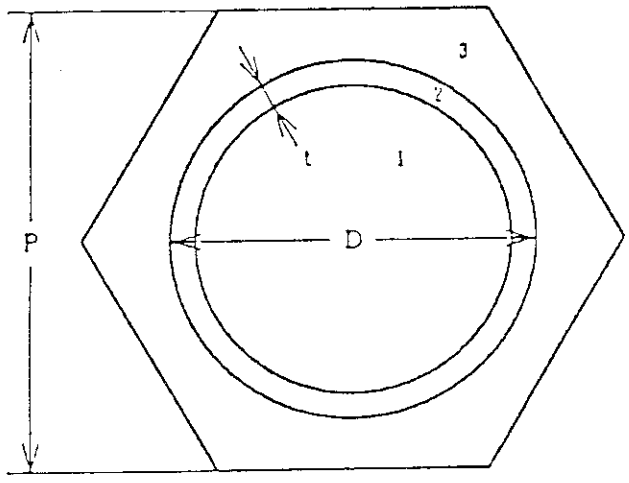

1. PuO_2 + UO_2
2. Stainless steel or Zr
3. H_2O

Moderator/fuel volume ratio (V_m/V_f)	0.6	1.1
Cell pitch P (cm)	1.0883	1.2204
Fuel ($PuO_2 + DUO_2$)		
Pu fission (%)	8.0	7.0
Temperature (K)	900	900
Cladding	SS	Zr
Outer diameter D (cm)	0.95	0.95
Thickness t (cm)	0.065	0.065
Temperature (K)	600	600
Moderator (H_2O)		
Temperature (K)	600	600
Linear Power (W/cm)	160	160

Table 2: Specification of fuel cell model

Fuel	8% Pu fission	7% Pu fission
U 235	6.094×10^{-5}	6.194×10^{-5}
U 238	2.025×10^{-2}	2.058×10^{-2}
Pu239	1.563×10^{-3}	1.367×10^{-3}
Pu240	6.872×10^{-4}	6.009×10^{-4}
Pu241	2.765×10^{-4}	2.418×10^{-4}
Pu242	2.108×10^{-4}	1.844×10^{-4}
O	4.610×10^{-2}	4.608×10^{-2}
Cladding	SS	Zr
Zr Nat	0	3.702×10^{-2}
Fe Nat	4.831×10^{-2}	0
Cr Nat	1.570×10^{-2}	0
Ni Nat	7.648×10^{-3}	0
Mn 55	1.486×10^{-3}	0
Moderator		
H	4.744×10^{-2}	
O	2.372×10^{-2}	

Table 3: Atomic number densities ($\times 10^{24}$ / cm^3)

V_m/V_f		0.6	1.1
Zone	Isotope	Density	Density
1 Fuel	U 235	3.086×10^{-5}	3.239×10^{-5}
	U 238	1.917×10^{-2}	1.968×10^{-2}
	Pu239	1.376×10^{-3}	1.007×10^{-3}
	Pu240	6.874×10^{-4}	5.389×10^{-4}
	Pu241	2.803×10^{-4}	2.976×10^{-4}
	Pu242	1.896×10^{-4}	1.726×10^{-4}
	Am241	3.375×10^{-5}	3.063×10^{-5}
	Am243	4.908×10^{-5}	4.900×10^{-5}
	O Nat	4.610×10^{-2}	4.608×10^{-2}
	Te 99	5.802×10^{-5}	5.778×10^{-5}
	Rh103	6.165×10^{-5}	5.772×10^{-5}
	Xe131	2.665×10^{-5}	2.591×10^{-5}
	Cs133	6.474×10^{-5}	6.470×10^{-5}
	Sm149	3.010×10^{-6}	1.090×10^{-6}
2 Clad	Cr Nat	1.570×10^{-2}	0
	Mn 55	1.486×10^{-3}	0
	Fe Nat	4.831×10^{-2}	0
	Ni Nat	7.648×10^{-3}	0
	Zr Nat	0	3.702×10^{-2}
3 Moderator	H 1	4.744×10^{-2}	4.744×10^{-2}
	O Nat	2.372×10^{-2}	2.372×10^{-2}

Table 4: Isotopical composition for cells with $V_m/V_f = 0.6$ and 1.1 at 50 GWd/t burnup.

Fuel	U^{235}, U^{238}, Pu^{239}, Pu^{240}, Pu^{241}, Pu^{242}, Am^{241}, Am^{243}
Fission Product	Tc^{99}, Rh^{103}, Xe^{131}, Cs^{133}, Sm^{149}
Structure	Zr (Zr cladding) Fe, Cr, Ni, Mn^{55} (stainless steel cladding)

Table 5: Nuclides to be used for calculating one- and three-group cross-sections and/or reaction rates

Group	Energy Range
Fast	15 MeV - 9.118 keV
Resonance	9.118 keV - 4 eV
Thermal	4 eV - 0.0 eV

Table 6: Three-group Energy Structure

3. Data and Method

3.1 Code Descriptions

The VIM code is a continuous energy Monte Carlo code designed primarily for fast reactor calculations, but also contains a thermal neutron scattering capability. The code developing work was initiated at Atomic International[46] and has been continued at Argonne National Laboratory[47]. When the code system including the library based on ENDF/B-Ⅳ was transferred to JAERI, the library data were limited on nuclide and temperature available. Since some cross section processing codes were developed and arranged by T.Mori et al.[48] at JAERI, we have been able to generate the library data for any nuclide on arbitrary temperature from ENDF/B format files. By using the processing codes, we have composed a set of VIM library data, on the basis of JENDL-2 file, for HCLWR analyses.
The combination of the VIM code and the JENDL-2 library has been used in order to check calculational methods of our reactor design code system SRAC and the library.

The structure of the VIM code is as follows[47]: Cross section definition is made by composition-independent microscopic data sets. Resonance and smooth cross sections are specified pointwise with linear interpolation to provide a continuous energy cross section description. Unresolved resonances are described by the probability table method[49]. The reaction types (fission, elastic scattering, discrete level inelastic scattering, inelastic continuum scattering, and (n,2n) reaction) are specifically defined, while "capture" is defined as the remaining possible outcome of a neutron collision. Neutron trajectories and scattering are continuous in angle. Anisotropic elastic and discrete level inelastic scattering are described with their own probability tables.

The VIM code calculates eigenvalues by analog, collision, and track length estimation, and averaging of the various eigenvalue estimates is provided for variance reduction. Both collision and track length estimation are used to provide reaction rate estimates by region, group, and/or isotope, while group- and region-wise integrated fluxes are provided by track length estimation. Track length estimation of reaction rates and fluxes is used to provide estimates of broad-group microscopic cross sections over edit regions.

The SRAC code[42,43,50] has been developed at JAERI as a JAERI thermal reactor standard neutronics design code system. While incorporating the conventional transport (ANISN, TWOTRAN) and diffusion (CITATION) codes, SRAC is characterized by application of the collision probability method on the resonance absorption and the cell calculations over the whole neutron energy. A comprehensive set of collision probability routines (PIJ) for 13 types of geometries yields wide application of SRAC to almost all types of thermal reactors. The PIJ routine was employed for this benchmark calculations. Recent modifications of data and methods[18,37-41] extend its applicability to HCLWRs cores. By using the auxiliary codes (COREBN, HIST), practical core burnup calculation is also available. They have been employed for the HCLWR core design studies[51,52].

On the resonance calculation method significant for HCLWR studies, users select one of the following three methods: a) Table-look-up method of Bondarenko type table based on narrow resonance approximation (NRA), b) Table-look-up method based on intermediate resonance approximation (IRA), c) ultrafine group calculation by the PEACO routine (PEACO)[53]. The PEACO routine calculates effective cross sections by the collision probability method for the energy range from thermal-cut-off energy to 130.07 eV with 4600 groups for cross section table and 460 groups for flux calculation. For the other energy range, the table-look-up method by NRA is applied.

3.2 Cross Section Processing Codes for VIM

Figure 3.1 shows the flow-diagram of generating library data for the VIM code. The cross section processing codes are available not only for the VIM library but also for the MCNP library. The functions of the codes are described in the followings.

1) LINEAR[54]

The function of this code is to linearize, with interpolation, pointwise cross section data in an evaluated nuclear data file within an error given by user. It was developed by D.E.Cullen at IAEA.

2) RECENT[54]

This code has the function of converting resonance parameters to

pointwise cross section data at 0 K. The reproduced pointwise cross section data is linearized within an error given by user. The method of the RESENDD code[55] (modified version of RESEND) is employed so as to deal with correctly the Breit-Wigner's multilevel formula for the JENDL-2 file.

3) SIGMA1[54]

This code calculates Doppler broadened cross section data at arbitrary temperature from pointwise cross section data at 0 K. It was developed by D.E.Cullen at IAEA.

4) ACER-J[48]

This code was modified at JAERI on the basis of the calculation module ACER in the NJOY system[56]. It has the following functions.

- to generate an energy mesh.
- to generate a probability table of angular distribution to incident neutron energy.
- to describe energy distribution of a secondary neutron.
- to describe ν-value.

5) U3R-J[48]

The function of this code is to generate the probability tables of unresolved resonance cross sections. This code is a JAERI modified version of the U3R code[57]. After the module UNRESR in the NJOY system was incorporated into U3R, some modifications were added for users' convenience. The calculated results are stored in different members of a PDS file (Partitioned Data Set : DS organization PO with undefined record format, and maximum block-size of the device) by an incident neutron energy and an temperature.

6) THERM-J[48]

This code is a JAERI modified version of the FLANGE-II code[58] to deal with thermal scattering data. On the elastic scattering, the cross section data is interpolated to the specified temperature, and it is linearized to incident neutron energy. The angular distribution of the secondary neutron is described as a probability table after an interpolation to the temperature. On the inelastic scattering, the linearized cross section data for the incident neutron energy and the probability table for the energy distribution of the secondary neutron

are calculated with $S(\alpha,\beta,T)$ given in an evaluated nuclear data file. For the description of the angular distribution, a double P1 approximation is used to calculate the probability table. These interpolations are performed according to the scheme indicated in an evaluated nuclear data file except for the case of $S(\alpha,\beta,T)$ to T, where a unique interpolation scheme is used in this code. The calculated results are stored in a PDS file.

7) LIBMAKE[48]

This code developed at JAERI edits the results of ACER-J, U3R-J, THERM-J and prepares nuclide/temperature-dependent library (material library) for continuous energy Monte Carlo codes.

8) FILEONE, BANDIT[47]

These are utility programs of the VIM code. They edit the material libraries and prepare a user's VIM library with a band energy structure. They can deal with up to 20 sets of material libraries.

3.3 Library Data for VIM

For the analyses of the benchmark problems, 41 VIM material libraries as shown in Table 3.1 were prepared with the cross section processing codes described before. Most of the material libraries were generated on the basis of the JENDL-2 file, while for some nuclides which were not evaluated in JENDL-2, the material libraries were generated on the basis of the ENDF/B-Ⅳ file. All of the libraries were processed so that the deviations of linearized pointwise cross sections from those of the evaluated nuclear data file became to be less than 0.1 % at any energy point.

Concerning the nuclides which have the unresolved resonance data, the cross section probability table was generated in the unresolved resonance energy range with the U3R-J code. The energy range of each nuclide and the convergence criterion for U3R-J are shown in Table 3.2.

Table 3.3 shows the thermal scattering treatment. The chemical binding effect was considered for H_2O moderator with the $S(\alpha,\beta,T)$ data in ENDF/B-Ⅲ, while the effect was not considered for dowtherm, which was used as moderator in PROTEUS-LWHCR cores 3 and 4, because the thermal scattering law data for dowtherm could not be obtained. Also for MOX or UO_2, it was not considered because of upper limit of number

of material libraries available for the VIM code. It was confirmed by using the SRAC code that the chemical binding effect of UO_2 was negligibly small.

The detailed information on the generated VIM material libraries is shown in Tables 3.4 and 3.5.

Table 3.1 List of VIM material libraries

No.	Material	Temp.(K)	ID	File name (PS)	Data
1	Pu-240	300	10300	J3803.VIMLIB.T300.PU240J2	JENDL-2
2		900	10900	J4244.VIMLIB.T900.PU240J2	JENDL-2
3	Pu-241	300	20300	J3803.VIMLIB.T300.PU241J2	JENDL-2
4		900	20900	J4244.VIMLIB.T900.PU241J2	JENDL-2
5	U-235	300	30300	J3803.VIMLIB.T300.U235J2	JENDL-2
6		900	30900	J4244.VIMLIB.T900.U235J2	JENDL-2
7	U-238	300	40300	J3803.VIMLIB.T300.U238J2	JENDL-2
8		900	40900	J4244.VIMLIB.T900.U238J2	JENDL-2
9	Pu-239	300	50300	J3803.VIMLIB.T300.PU239J2	JENDL-2
10		900	50900	J3803.VIMLIB.T300.PU239J2	JENDL-2
11	U-233	300	100300	J2350.V0010.DATA	ENDF/B-Ⅳ
12	Pu-242	300	110300	J3803.VIMLIB.T300.PU242J2	JENDL-2
13		900	110900	J4244.VIMLIB.T900.PU242J2	JENDL-2
14	Am-241	300	130300	J4244.VIMLIB.T300.AM241J2	JENDL-2
15		900	130900	J4244.VIMLIB.T900.AM241J2	JENDL-2
16	Am-243	900	140900	J4244.VIMLIB.T900.AM243J2	JENDL-2
17	Cr-nat.	300	210300	J3803.VIMLIB.T300.CRNATJ2	JENDL-2
18		600	210600	J4244.VIMLIB.T600.CRNATJ2	JENDL-2
19	Ni-nat.	300	220300	J3803.VIMLIB.T300.NINATJ2	JENDL-2
20		600	220600	J4244.VIMLIB.T600.NINATJ2	JENDL-2
21	Fe-nat.	300	230300	J3803.VIMLIB.T300.FENATJ2	JENDL-2
22		600	230600	J4244.VIMLIB.T600.FENATJ2	JENDL-2
23	Al-27	300	240300	J3803.VIMLIB.T300.AL27J2	JENDL-2
24	O-16	300	260300	J3803.VIMLIB.T300.O16B4	ENDF/B-Ⅳ
25	O-16	600	260600	J4244.VIMLIB.T600.O16B4	ENDF/B-Ⅳ
26	O-16	900	260900	J3803.VIMLIB.T300.O16B4	ENDF/B-Ⅳ
27	C-12	300	270300	J3803.VIMLIB.T300.C12J2	JENDL-2
28	Mn-55	300	290300	J3803.VIMLIB.T300.MN55J2	JENDL-2
29		600	290600	J4244.VIMLIB.T600.MN55J2	JENDL-2
30	H-1	300	350300	J3803.VIMLIB.T300.H1J2	JENDL-2
31	Si-nat.	300	380300	J3803.VIMLIB.T300.Pu240J2	JENDL-2
32		600	380600	J4244.VIMLIB.T600.SINATJ2	JENDL-2
33	N-14	300	420300	J3803.VIMLIB.T300.N14B4	ENDF/B-Ⅳ
34	Sm-149	900	460900	J4244.VIMLIB.T900.SM149J2	JENDL-2
35	Cs-133	900	670900	J4244.VIMLIB.T900.CS133J2	JENDL-2
36	Zry-2	600	690600	J4244.VIMLIB.T600.ZRY2B4	ENDF/B-Ⅳ
37	Xe-131	900	700901	J4244.VIMLIB.T900.XE131J2	JENDL-2
38	Rh-103	900	750900	J4244.VIMLIB.T900.RH103J2	JENDL-2
39	Tc-99	900	770900	J4244.VIMLIB.T900.TC99J2	JENDL-2
40	H¥H20[a]	300	900300	J4244.VIMLIB.T300.H¥H20B3	ENDF/B-Ⅳ[b]
41		600	900600	J4244.VIMLIB.T600.H¥H20B3	ENDF/B-Ⅳ[b]

[a] Hydrogen of H_2O (chemical binding is considered in thermal energy range)
[b] Thermal data is based on ENDF/B-Ⅲ.

Table 3.2 Unresolved resonance treatment

ID NO.	NAME	UNRESOLVED RESONANCE TABLE RANGE(EV)	CONVERGENCE CRITERION IN U3R-J
10300, 10900	PU240	4.000E+3 TO 4.000E+4	1.0 %
20300, 20900	PU241	1.000E+2 TO 3.000E+4	1.0 %
30300, 30900	U-235	1.000E+2 TO 3.000E+4	1.0 %
40300, 40900	U-238	4.000E+3 TO 5.000E+4	1.0 %
50300, 50900	PU239	5.980E+2 TO 3.000E+4	1.0 %
130300,130900	AM241	1.500E+2 TO 3.000E+4	1.0 %
140900	AM243	2.150E+2 TO 3.000E+4	1.0 %
460900	SM149	4.239E+2 TO 1.000E+5	5.0 %
670900	CS133	5.975E+3 TO 1.000E+5	5.0 %
700901	XE131	2.250E+3 TO 1.000E+5	5.0 %
750900	RH103	3.580E+3 TO 1.000E+5	5.0 %
770900	TC-99	4.219E+3 TO 1.000E+5	5.0 %

Table 3.3 Thermal scattering treatment

ID NO.	NAME	ITH	NIG	NFG	NPTH	NTHANG	ESAB	TLIB	TSTAR
90300	H¥H20	1	66	69	0	0	2.00	300.0	1397.82
90600	H¥H20	1	66	70	0	0	2.00	600.0	1506.80
OTHER NUCLIDES		0	0	0	0	0	0.00	———	0.0

ITH- THERMAL SCATTERING FLAG
(0=FREE ATOM, 1=S(α, β), -1=S(α, β)+THERM. ELAST.)
NIG- NO. OF INCIDENT ENERGY PTS. IN THERMAL SCATTERING LAW DATA
NFG- NO. OF FINAL ENERGY PTS. IN THERMAL SCATTERING LAW DATA
NPTH- NO. OF GRID PTS. FOR THERMAL INELASTIC XS
NTHANG- NO. OF THERMAL ELASTIC ANGULAR DISTRIBUTIONS
ESAB- HIGHEST ENERGY FOR THERMAL SCATTERING LAW DATA
TLIB- LAB TEMPERATURE IN DEGREES KELVIN
TSTAR- EFFECTIVE TEMPERATURE FOR FREE ATOM SCATTERING

Table 3.4 Contents of VIM material libraries for PROTEUS core analyses (300K)

ID No.	NAME	LUN	NPTS	NPTSF	NPTSI	NINL	NN2N	NANG	NANI	NURT	NP	NSEC	NTAB	NALL	NLEV	INTUNR	WORDS
10300	PU240	22	18257	18257	267	2340	53	42	0	28	20	2	0	36	29	0	84617
20300	PU241	23	5361	5361	538	5043	266	75	0	22	20	2	0	33	11	0	40927
30300	U-235	24	8594	8594	2227	12803	150	115	0	28	20	2	0	32	29	0	61788
40300	U-238	25	42288	42288	153	1186	22	44	13	21	20	2	0	32	24	0	179179
50300	PU239	26	14894	14894	616	12408	225	94	0	34	20	2	0	38	28	0	86062
100300	U-233	27	2641	2641	114	159	28	39	0	0	0	0	0	13	7	0	19215
110300	PU242	28	16296	16296	269	1324	67	42	0	0	0	2	0	30	17	0	75999
130300	AM241	29	13671	13671	556	7180	207	54	313	27	20	2	0	29	16	0	83486
210300	CR	30	17101	0	1264	20690	92	61	0	0	0	2	0	24	40	0	83359
220300	NI	31	33739	0	22240	41676	118	65	0	0	0	30	0	36	40	0	175891
230300	FE	32	25797	0	22943	51865	90	59	0	0	0	2	0	26	33	0	162221
240300	AL27	33	1251	0	240	1199	24	41	0	0	0	2	0	20	8	0	13534
260300	O-16	34	1657	0	345	3696	0	369	10	0	0	0	0	0	39	0	23440
270300	C-12	35	732	0	250	250	0	197	72	0	0	0	0	37	1	0	13746
280300	MO	36	40928	0	481	12638	119	64	161	0	0	8	0	27	40	0	146778
290300	MN55	37	18273	0	363	2649	51	29	175	0	0	2	0	22	15	0	66648
350300	H-1	38	467	0	1	0	0	10	0	0	0	0	0	0	0	0	8640
380300	SI	39	1344	0	448	6991	49	48	0	0	0	2	0	23	33	0	20453
420300	N-14	40	1364	0	534	3647	76	207	148	0	0	0	7	169	32	0	21133
900300	H¥H2O	41	514	0	1	0	0	6	0	0	0	0	0	0	0	0	8701

GLOSSARY OF TABLE NAMES

LUN- ASSIGNED LOGICAL UNIT NUMBER
NPTS- NUMBER OF POINTS IN ENERGY GRID
NPTSF- NUMBER OF FISSION POINT
NPTSI- NUMBER OF POINTS FOR INELASTIC RANGE
NINL- TOTAL NUMBER OF LEVEL XSEC VALUES
NN2N- NUMBER OF (N,2N) POINTS
NANG- NUMBER OF ELASTIC SCATTERING TABLES
NANI- NUMBER OF INELASTIC SCATTERING TABLES
NURT- NUMBER OF UNRESOLVED RESONANCE PROBABILITY TABLES
NP- NUMBER OF PROBABILITY TABLE POINTS
NSEC- NUMBER OF POINTS IN SUBSECTION TABLE ARRAY
NTAB- NUMBER OF POINTS IN SECONDARY TABULATIONS
NALL- NUMBER OF POINTS IN (EALL,TALL) ARRAYS
INTUNR- UNRES REGION INTERP CODE (0=ENERGY,1=LETHARGY)
WORDS- APPROXIMATE NUMBER OF WORDS IN MATERIAL DATA SET

VIM USER'S LIBRARY

J4244.MOVEJ2P.DATA
J4244.STAYJ2P.DATA

Table 3.5 Contents of VIM material libraries for hexagonal unit cell analyses (600K,900K)

ID No.	NAME	LUN*)	NPTS	NPTSF	NPTSI	NINL	NN2N	NANG	NANI	NURT	NP	NSEC	NTAB	NALL	NLEV	INTUNR	WORDS
10900	PU240	22(22)	13172	13172	267	2340	53	42	0	28	20	2	0	36	29	0	64414
20900	PU241	23(23)	4352	5361	538	5043	266	75	0	22	20	2	0	33	11	0	37028
30900	U-235	24(24)	6297	6297	1686	12262	150	115	0	28	20	2	0	32	29	0	51655
40900	U-238	25(25)	29338	29338	152	1186	21	44	13	21	20	2	0	32	24	0	127495
50900	PU239	26(26)	11501	11501	617	12436	226	94	0	34	20	2	0	38	28	0	72676
110900	PU242	27(27)	13750	13750	269	1324	67	42	0	0	0	2	0	30	17	0	65952
130900	AM241	28(28)	9221	9221	556	7180	207	54	313	27	20	2	0	29	16	0	65823
140900	AM243	29(29)	10897	10897	538	4255	201	43	177	8	20	2	0	29	9	0	62073
210600	CR	30	16153	0	1265	20730	92	61	0	0	0	2	0	24	40	0	80693
220600	NI	31	30337	0	20501	39822	118	65	0	0	0	30	0	36	40	0	162229
230600	FE	32	23367	0	20779	48872	90	59	0	0	0	2	0	26	33	0	149911
260600	O-16	33(30)	1567	0	342	3629	0	369	10	0	0	0	0	0	39	0	23237
260900	O-16H	34(31)	1568	0	342	3629	0	369	10	0	0	0	0	0	39	0	23240
290600	MN55	35	15954	0	363	2649	51	29	175	0	0	2	0	22	15	0	59828
460900	SM149	36(32)	10827	0	361	3008	0	42	50	23	20	0	0	11	10	0	45105
670900	CS133	37(33)	29785	0	408	4254	0	47	65	14	20	0	0	11	13	0	103147
690900	ZRY-2	37(34)	29785	0	408	4254	0	47	65	14	20	0	0	11	13	0	103147
700901	XE131	38(35)	8064	0	398	2677	0	41	40	17	20	0	0	11	8	0	36022
750901	RH103	39(36)	20573	0	349	2840	0	41	60	12	20	0	0	11	12	0	73723
770901	TC-99	40(37)	26002	0	324	2679	0	37	49	13	20	0	0	11	10	0	89650
900600	HWH20	41(38)	525	0	1	0	0	6	0	0	0	0	0	0	0	0	8871

*) CASE OF V_m/V_f=0.6 (CASE OF V_m/V_f=1.1)

VIM USER'S LIBRARY

CASE OF V_m/V_f=0.6	CASE OF V_m/V_f=1.1
J4244.MOVEJ2S.DATA	J4244.MOVEJ2Z.DATA
J4244.STAYJ2S.DATA	J4244.STAYJ2Z.DATA

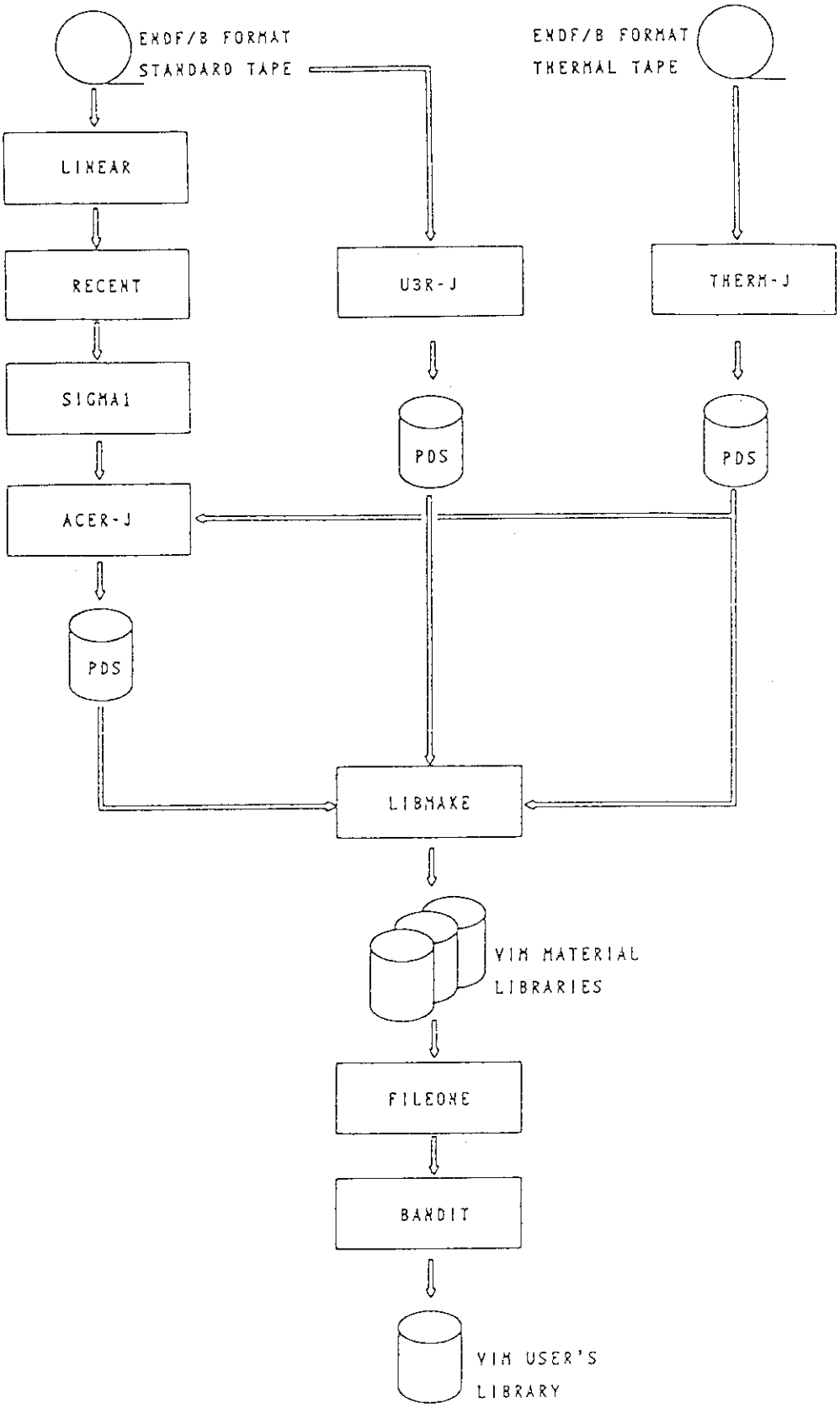

Fig. 3.1 Flow diagram to generate the VIM user's library.

3.4 Model and Method

The geometrical models employed for the VIM and SRAC calculations are shown in Fig.3.2 ~ Fig.3.4. The cell models in SRAC for the PROTEUS core analyses are different from the models in VIM. The differences come simply because of a user's art to increase the calculation accuracy or because of the difference of boundary conditions available for each code.

A series of the VIM calculations were performed until the statistical error of each k_∞ value became to be less than 0.2% without a splitting option. The number of followed neutrons and computational (CPU) times are shown in Table 3.6.

The cross sections and the reaction rates presented in the following chapter were provided by track length estimates. On the other hand, k_∞ values were provided by averaging of analog, collision and track length estimates for variance reduction.

According to the problem specifications, all of the requested reaction rates have to be normalized to the total absorption rate for the convenience of comparisons with other results. The VIM code, however, edits the reaction rates being normalized to the total number of injected neutrons, which does not coincide with the total absorption rate, because the (n,2n) reaction increases the number of neutrons during one generation. Therefore, the reaction rates edited by VIM were re-normalized to the total absorption rate as shown in Table 3.7.

In the PROTEUS analyses, the problem specifications request that the calculations should be performed for the fundamental mode (k_{eff}=1.0) considering the finite height of the each lattice. Nevertheless, the VIM calculations were performed only for the infinite lattices. Because the critical search by Monte Carlo method require too much effort. In addition, the region was ambiguous where the result should be edited. Exactly speaking, if we intend to take account of the finite height of the lattice, first, we have to test for each lattice where region a fundamental mode spectrum is realized. Otherwise the calculated results depend on assumed boundary conditions (vacuum, water reflector or driver zone etc.)

On the other hand, the SRAC calculations for PROTEUS cores were performed not only for the critical lattices but also for the non-critical lattices with zero buckling value (B^2=0.0) in order to investigate the fundamental mode effect. It is easy for the SRAC

calculation to take the fundamental mode effect into consideration by changing buckling value. The leakage effect is reflected to the spectral calculation by B1 approximation with an appropriate buckling value.

All of the calculations for this benchmark problem were carried out by using the PIJ routine based on the collision probability method with 90 group constants. The energy group structure is shown in Table 3.8. It should be noted that the upper energy limit of the energy gruop in SRAC is 10MeV, while the VIM calculations were carried out with that of 15MeV according to the benchmark specifications. The PEACO option described in the section 3.1 was employed for the HCLWR benchmark calculations with particular attention to the resonance treatments.

Features of the methods used to calculate the NEACRP HCLWR burnup problems are summarized in Table 3.9 for the VIM calculation and in Table 3.10 for the SRAC calculation.

Table 3.6 Number of followed neutrons and computational(CPU) times in VIM calculations.

Case ID[a]	Number of histories[b]	CPU time[c] (min.)	k_∞ Error (%)	Case ID[a]	Number of histories[b]	CPU time[c] (min.)	k_∞ Error (%)
Core 1	$2x10^5$	65.3	0.19				
Core 2	$1x10^5$	109.1	0.18				
Core 3	$2x10^5$	83.6	0.19				
Core 4	$2x10^5$	84.2	0.18				
Core 5	$1x10^5$	107.8	0.20				
Core 6	$2x10^5$	65.9	0.18				
BR6V00	$2x10^5$	30.3	0.16	BR1V00	$2x10^5$	21.5	0.17
BR6V45	$2x10^5$	40.6	0.16	BR1V45	$2x10^5$	28.4	0.17
BR6V90	$2x10^5$	67.0	0.16	BR1V90	$2x10^5$	55.7	0.14
BR6V99	$2x10^5$	83.6	0.12	BR1V99	$2x10^5$	80.5	0.13
ER6V00	$2x10^5$	35.6	0.15	ER1V00	$2x10^5$	26.1	0.19
ER6V45	$2x10^5$	46.3	0.14	ER1V45	$2x10^5$	34.4	0.18
ER6V90	$2x10^5$	79.9	0.15	ER1V90	$2x10^5$	67.8	0.16
ER6V99	$2x10^5$	100.3	0.12	ER1V99	$2x10^5$	99.0	0.15

[a] Core 1~6:PROTEUS, BR6V00:(BOL V_m/V_f=0.6 Void 0%), ER1V99:(EOL V_m/V_f=1.1 Void 99%)
[b] not include the first $1x10^4$ neutrons for initial source guess.
[c] include the time for initial source guess. (FACOM-780 machine)

Table 3.7 Total absorption rate and (n,2n) reaction rate in VIM calculations
The each absorption rate was employed as the normalization factor of the other reaction rates.

Case ID	Absorption rate (Error)	(n,2n) reaction rate (Error)	Case ID	Absorption rate (Error)	(n,2n) reaction rate (Error)
Core 1	1.0049 (0.240%)	2.2849E-3 (2.68%)			
Core 2	0.9988 (0.241%)	3.0444E-3 (2.35%)			
Core 3	1.0037 (0.231%)	2.3611E-3 (2.54%)			
Core 4	1.0006 (0.222%)	2.2017E-3 (2.24%)			
Core 5	1.0033 (0.295%)	2.7316E-3 (2.91%)			
Core 6	1.0008 (0.168%)	2.1538E-3 (2.91%)			
BR6V00	1.0021 (0.206%)	2.7868E-3 (2.25%)	BR1V00	1.0002 (0.213%)	2.6536E-3 (2.52%)
BR6V45	1.0040 (0.212%)	3.0336E-3 (2.11%)	BR1V45	1.0024 (0.201%)	3.2914E-3 (2.20%)
BR6V90	1.0042 (0.217%)	3.3983E-3 (2.19%)	BR1V90	1.0039 (0.203%)	3.8131E-3 (2.12%)
BR6V99	1.0020 (0.210%)	3.5060E-3 (2.15%)	BR1V99	1.0038 (0.253%)	4.1243E-3 (2.32%)
ER6V00	1.0031 (0.217%)	2.6408E-3 (2.09%)	ER1V00	1.0020 (0.228%)	2.5915E-3 (2.30%)
ER6V45	1.0043 (0.236%)	3.0259E-3 (2.11%)	ER1V45	1.0071 (0.239%)	3.0803E-3 (2.11%)
ER6V90	1.0036 (0.238%)	3.3472E-3 (2.42%)	ER1V90	1.0092 (0.230%)	3.8220E-3 (1.73%)
ER6V99	1.0055 (0.235%)	3.5060E-3 (2.35%)	ER1V99	1.0026 (0.208%)	4.0206E-3 (2.33%)

Table 3.8 Energy group structure of SRAC user's library.

Total number of user's fast groups 59
Total number of user's thermal groups 31

Group	E_{upper}(ev)	ΔU	Group	E_{upper}(ev)	ΔU
	<<<< Fast >>>>		47	0.10130E+03	0.2500
1	0.10000E+08	0.2500	48	0.78893E+02	0.2500
2	0.77880E+07	0.2500	49	0.61442E+02	0.2500
3	0.60653E+07	0.2500	50	0.47851E+02	0.2500
4	0.47237E+07	0.2500	51	0.37266E+02	0.2500
5	0.36788E+07	0.2500	52	0.29023E+02	0.2500
6	0.28651E+07	0.2500	53	0.22603E+02	0.2500
7	0.22313E+07	0.2500	54	0.17604E+02	0.2500
8	0.17377E+07	0.2500	55	0.13710E+02	0.2500
9	0.13534E+07	0.2500	56	0.10677E+02	0.2500
10	0.10540E+07	0.2500	57	0.83153E+01	0.2500
11	0.82085E+06	0.2500	58	0.64760E+01	0.2500
12	0.63928E+06	0.2500	59	0.50435E+01	0.2500
13	0.49787E+06	0.2500		<<<< Thermal >>>>	
14	0.38774E+06	0.2500	60	0.39279E+01	0.2500
15	0.30197E+06	0.2500	61	0.30590E+01	0.2500
16	0.23518E+06	0.2500	62	0.23824E+01	0.2500
17	0.18316E+06	0.2500	63	0.18554E+01	0.1250
18	0.14264E+06	0.2500	64	0.16374E+01	0.1250
19	0.11109E+06	0.2500	65	0.14450E+01	0.1250
20	0.86517E+05	0.2500	66	0.12752E+01	0.1250
21	0.67380E+05	0.2500	67	0.11253E+01	0.1250
22	0.52475E+05	0.2500	68	0.99312E+00	0.1250
23	0.40868E+05	0.2500	69	0.87643E+00	0.1250
24	0.31828E+05	0.2500	70	0.77344E+00	0.1250
25	0.24788E+05	0.2500	71	0.68256E+00	0.1250
26	0.19305E+05	0.2500	72	0.60236E+00	0.1250
27	0.15034E+05	0.2500	73	0.53158E+00	0.1250
28	0.11709E+05	0.2500	74	0.46912E+00	0.1250
29	0.91188E+04	0.2500	75	0.41399E+00	0.1252
30	0.71017E+04	0.2500	76	0.36528E+00	0.1252
31	0.55308E+04	0.2500	77	0.31961E+00	0.1432
32	0.43074E+04	0.2500	78	0.27699E+00	0.1541
33	0.33546E+04	0.2500	79	0.23742E+00	0.1670
34	0.26126E+04	0.2500	80	0.20090E+00	0.1823
35	0.20347E+04	0.2500	81	0.16743E+00	0.2006
36	0.15846E+04	0.2500	82	0.13700E+00	0.2228
37	0.12341E+04	0.2500	83	0.10963E+00	0.2498
38	0.96112E+03	0.2500	84	0.85397E-01	0.2882
39	0.74852E+03	0.2500	85	0.64017E-01	0.3352
40	0.58295E+03	0.2500	86	0.45785E-01	0.4029
41	0.45400E+03	0.2500	87	0.30602E-01	0.5051
42	0.35357E+03	0.2500	88	0.18467E-01	0.6773
43	0.27536E+03	0.2500	89	0.93805E-02	1.0320
44	0.21445E+03	0.2500	90	0.33423E-02	5.8117
45	0.16702E+03	0.2500		1.00000E-05	
46	0.13007E+03	0.2500			

Table 3.9 Features of the methods used to calculate NEACRP HCLWR Burnup Benchmarks (VIM).

Questions	Answer, Short explanation if needed
Datum	May 29, 1989
Participant	K.Okumura
Country	Japan
Institution	JAERI (Japan Atomic Energy Research Institute)
Code	VIM
Evaluation used for cross section library	JENDL-2 (and ENDF/B-IV for some nuclides:Table 3.1)
Number of energy groups	Continuous energy
Number of thermal energy groups	Continuous energy
Was table method used for resonamce shielding ?	No
Was slowing-down method used for resonance shielding ?	—
Cell geometry considered for resonance shielding	Hexagonal
Was the resonance shielding repeated after some burn-up steps ?	Yes
Was the resonance shielding repeated after voiding the cell ?	Yes
Were ^{16}O-resonance shielded ?	Yes
Were cladding resonances shielded ?	Yes
Were fission-product resonances shielded ?	Yes
Were higher-actinide resonances shielded ?	Yes

Table 3.9 (continued)

Questions	Answer, Short explanation if needed
Was the spatial dependence of the resonance shielding considered ?	Yes
Was the spatial burn-up dependence considered ?	Yes
Number of zones used in the cell calculation	Continuous
Number of spatial intervals used in the cell calculation (fuel+clad+moderator)	Continuous
Order of the scattering anisotropy	Exact (Probability table)
Type of the transport cross-section approximation	—
Was fixed fission spectrum used ?	Yes
Was fission spectrum calculated using the fission matrices ?	No
Was elastic scattering matrix correction applied ?	—
What method was used for the cell calculation ? Geometry	Continuous energy Monte Carlo method, Hexagonal
Boundary conditions	Perfect reflection
Number of discrete fission product cross-section sets used in the burnup calculation	Continuous energy
Number of discrete-actinide cross-section sets used in the burn-up calculation	Continuous energy
Number of the energy groups of neutron spectrum used for burn-up calculation	Continuous energy
Number of the energy groups of the vector cross-section burn-up library	Continuous energy

Table 3.10 Features of the methods used to calculate NEACRP HCLWR burnup Benchmarks (SRAC).

Questions	Answer, Short explanation if needed
Datum	May 29, 1989
Participant	H.Akie, H.Takano, Y.Ishiguro and K.Okumura, K.Tanaka for new problems
Country	Japan
Institution	JAERI (Japan Atomic Energy Research Institute)
Code	SRAC
Evaluation used for cross section library	JENDL-2 (and ENDF/B-IV for some nuclides:Table 3.1)
Number of energy groups	90 (Structure:Table 3.8)
Number of thermal energy groups	31
Was table method used for resonamce shielding ?	Yes, NR-method for energy ranges 1.0E-5 eV～3.9279 eV and 130.07 eV～10 MeV
Was slowing-down method used for resonance shielding ?	Yes, PEACO (Collision probability method with ultra fine energy groups) for 3.9279 eV～130.07 eV
Cell geometry considered for resonance shielding	Hexagonal
Was the resonance shielding repeated after some burn-up steps ?	Yes
Was the resonance shielding repeated after voiding the cell ?	Yes
Were ^{16}O-resonance shielded ?	Yes
Were cladding resonances shielded ?	Yes
Were fission-product resonances shielded ?	Yes
Were higher-actinide resonances shielded ?	Yes

Table 3.10 (continued)

Questions	Answer, Short explanation if needed
Was the spatial dependence of the resonance shielding considered ?	No
Was the spatial burn-up dependence considered ?	No
Number of zones used in the cell calculation	3
Number of spatial intervals used in the cell calculation (fuel+clad+moderator)	3+1+1 for thermal energy range 1+1+1 for epi-thermal range
Order of the scattering anisotropy	1 (Transport correction)
Type of the transport cross-section approximation	Extended transport approx.
Was fixed fission spectrum used ?	Yes
Was fission spectrum calculated using the fission matrices ?	No
Was elastic scattering matrix correction applied ?	No
What method was used for the cell calculation ? Geometry	Collision probability method Hexagonal
Boundary conditions	Perfect reflection
Number of discrete fission product cross-section sets used in the burnup calculation	65 explicit + 1 lumped pseudo
Number of discrete-actinide cross-section sets used in the burn-up calculation	13
Number of the energy groups of neutron spectrum used for burn-up calculation	90
Number of the energy groups of the vector cross-section burn-up library	—

(1) VIM

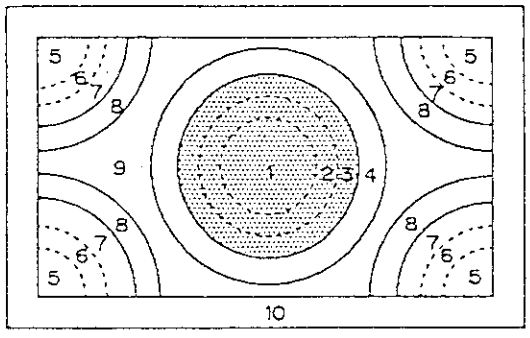

(2) SRAC

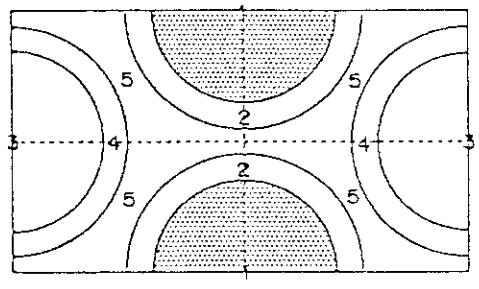

Periodic boundary condition

Finest edit(monitering) region No.	Homogenized edit region No. for RETALLY[a]	Edit region No.[b]
1: MOX fuel (inner)	1: MOX fuel	1: MOX fuel
2: MOX fuel (middle)		2: Cladding of MOX pin
3: MOX fuel (outer)		3: DUO_2 fuel
4: Cladding of MOX pin	2: Cladding of MOX pin	4: Cladding of DUO_2 pin
5: DUO_2 fuel (inner)	3: DUO_2 fuel	5: Moderator
6: DUO_2 fuel (middle)		
7: DUO_2 fuel (outer)		
8: Cladding of DUO_2 pin	4: Cladding of DUO_2 pin	
9: Moderator	5: Moderator	
10: Perfect reflector		

Fig. 3.2 Lattice geometry models in VIM and SRAC for PROTEUS cores 1~3.

[a] Utility program of VIM for energy-condensing and/or region-homogenizing.

[b] T- or R-region number in SRAC.

(1) VIM

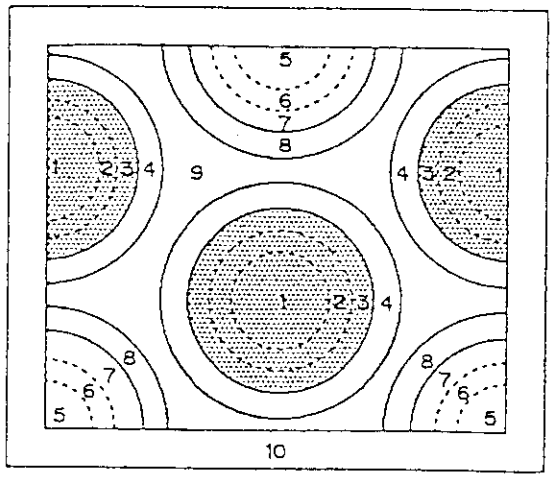

(2) SRAC

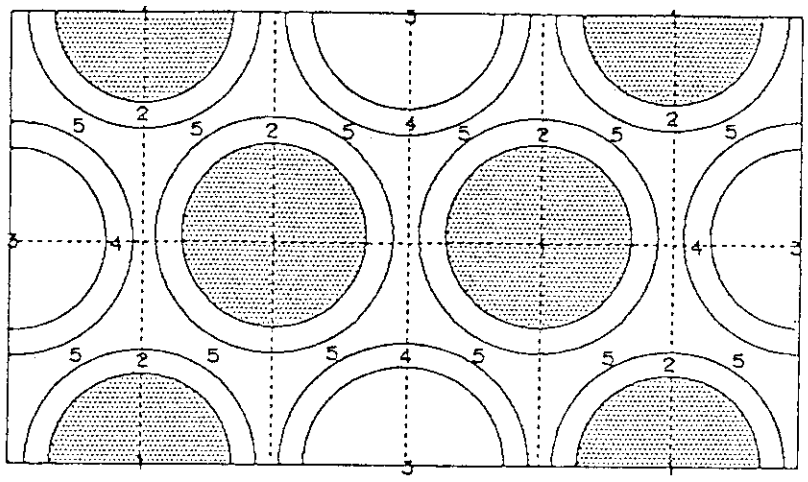

Periodic boundary condition

Fig. 3.3 Lattice geometry models in VIM and SRAC for PROTEUS cores 4~6. Relation between edit region number and mixture is identical to that in Fig. 3.2.

(1) VIM

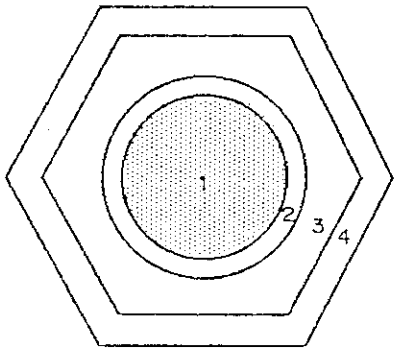

(2) SRAC

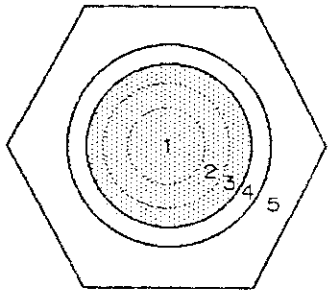

Perfect reflection

Finest edit region No.

1: MOX
2: Cladding
3: Moderator
} Cell average (RETALLY)
4: Perfect reflector

T-region No.	R(edit)-region No.
1: MOX (inner)	1
2: MOX (middle)	1
3: MOX (outer)	1
4: Cladding	2
5: Moderator	3

Fig. 3.4 Lattice geometry models in VIM and SRAC for unit pin at BOL/EOL.

4. Benchmark Calculation Results

Main part of the calculated results are summarized in this chapter according to the table format common among the participants, which was distributed from NEA Data Bank. The table names also corresponds to the original ones without the first character "S", "V", "R" or "E" (e.g. Table S.A.I). The first character "S" denotes the results calculated by SRAC, while "V" denotes those by VIM. The ratios of the SRAC to VIM results are shown in the table whose the first character is "R" (e.g. Table R.A.I) for our convenience of comparison. The calculated results for the PROTEUS-LWHCR are compared with the experimental values[59] in Table E.A.I, which were presented by PSI at the second specialists' meeting. Some additional tables are also shown for discussions.

4.1 PROTEUS-LWHCR

Table E.A.I Experimental values for two-rod heterogeneity for reaction rates, lattice average reaction rate ratios and k_∞. Due to the small deviations of the PROTEUS core center neutron spectrum from the fundamental mode, small correction factors calculated by PSI have been applied to the experimental reaction rate ratios.

Table S.A.I Two-rod heterogeneity for reaction rates, lattice average reaction rate ratios and k_∞ (SRAC-FM). The symbol "FM" stands for buckling adjustment (k_{eff}=1.0) to consider the fundamental mode effect.

Table S.A.I.2 Two-rod heterogeneity for reaction rates, lattice average reaction rate ratios and k_∞ (SRAC-NFM). The symbol "NFM" stands for non-critical calculation (B^2=0.0).

Table S.A.I.3 Fundamental mode effect on two-rod heterogeneity for reaction rates, lattice average reaction rate ratios and k_∞ (SRAC-FM/SRAC-NFM).

Table S.A.I.4 C(SRAC-FM)/E values for two-rod heterogeneity for reaction rates, lattice average reaction rate ratios and k_∞.

Table V.A.I Modified VIM results being considered the fundamental

Table E.A.I Experimental values for two rod heterogeneity for reaction rates, lattice average reaction rate ratios and k_∞ [59].

	CORE[a]					
	1	2	3	4	5	6
C_8	0.9860 (1.00%)	0.9980 (0.30%)	0.9890 (1.00%)	0.9990 (0.80%)	0.9970 (0.30%)	0.9850 (0.80%)
F_8	0.9420 (0.80%)	0.9710 (0.50%)	0.9380 (0.50%)	0.9540 (1.20%)	0.9700 (0.70%)	0.9570 (0.90%)
F_5	1.2650 (1.20%)	1.0030 (0.30%)	1.1310 (0.70%)	1.0880 (0.50%)	1.0060 (0.70%)	1.1770 (0.60%)
F_9	1.9180 (1.40%)	1.0050 (0.30%)	1.5720 (1.00%)	1.4290 (0.80%)	1.0080 (0.80%)	1.6720 (1.10%)
F_1	———	———	———	———	———	———
C_8/F_9	0.0692 (2.20%)	0.1514 (1.50%)	0.0877 (2.00%)	0.0943 (2.80%)	0.1456 (2.00%)	0.0750 (3.00%)
F_8/F_9	0.0101 (2.50%)	0.0187 (2.00%)	0.0115 (2.30%)	0.0146 (2.60%)	0.0235 (2.40%)	0.0121 (2.80%)
F_5/F_9	0.9880 (2.00%)	1.1080 (1.50%)	1.0320 (1.80%)	1.0490 (1.80%)	1.0390 (1.70%)	0.9470 (2.10%)
F_1/F_9	1.7800 (4.50%)	1.4700 (2.50%)	1.7500 (3.50%)	———	———	———
k_∞	1.0450 (1.10%)	0.9050 (0.80%)	0.9910 (1.50%)	———	———	———

[a] Moderator / Core-1,6 : H_2O / Core-2,5 : Void / Core-3,4 : Dowtherm

Table S.A.I Two-rod heterogeneity for reaction rates, lattice average reaction rate ratios and k_∞ (SRAC-FM[a]).

	CORE					
	1	2	3	4	5	6
C_8	0.96052	0.97055	0.95268	0.95262	0.97598	0.95663
F_8	0.93283	0.96214	0.94138	0.95574	0.96940	0.94908
F_5	1.25344	1.00091	1.12698	1.08735	1.00079	1.17679
F_9	1.91337	1.00890	1.59428	1.44681	1.00678	1.72819
F_1	1.39092	1.00123	1.21823	1.15384	1.00103	1.28403
C_8/F_9	0.06748	0.15680	0.08781	0.09859	0.15143	0.07907
F_8/F_9	0.01011	0.02090	0.01230	0.01549	0.02186	0.01292
F_5/F_9	0.98516	1.15525	1.08037	1.11024	1.11005	0.99953
F_1/F_9	1.68746	1.48608	1.81036	1.86788	1.43491	1.77951
k_∞	1.04555	0.89484	0.98132	1.06544	1.08166	1.10318
B^2	8.279E-4	-4.589E-4	-2.621E-4	9.181E-4	3.579E-4	1.892E-3
H(cm)	109.2	———	———	103.7	166.1	72.2

[a] Buckling adjustment (k_{eff}=1.0).

Table S.A.I.2 Two-rod heterogeneity for reaction rates, lattice average reaction rate ratios and k_∞ (SRAC-NFM[a]).

	CORE					
	1	2	3	4	5	6
C_8	0.96053	0.97163	0.95269	0.95254	0.97530	0.95664
F_8	0.93284	0.96211	0.94137	0.95576	0.96941	0.94909
F_5	1.25385	1.00059	1.12661	1.08821	1.00099	1.17878
F_9	1.91803	1.00774	1.59275	1.45109	1.00752	1.73509
F_1	1.39214	1.00088	1.21776	1.15503	1.00125	1.28632
C_8/F_9	0.06733	0.15404	0.08686	0.09855	0.15263	0.07882
F_8/F_9	0.00994	0.02063	0.01215	0.01503	0.02134	0.01244
F_5/F_9	0.98442	1.13946	1.08021	1.11130	1.13335	0.98741
F_1/F_9	1.68902	1.46816	1.80936	1.87280	1.44792	1.78276
k_∞	1.04415	0.91755	0.98242	1.06106	1.06360	1.09919

[a] No buckling adjustment (B^2=0.0).

Table S.A.1.3 Fundamental mode effect on two-rod heterogeneity for reaction rates, lattice average reaction rate ratios and k_∞ (SRAC-FM / SRAC-NFM).

	CORE					
	1	2	3	4	5	6
C_8	0.99999	0.99889	0.99999	1.00009	1.00070	0.99999
F_8	0.99999	1.00003	1.00001	0.99998	0.99999	0.99999
F_5	0.99967	1.00031	1.00033	0.99921	0.99980	0.99831
F_9	0.99756	1.00115	1.00096	0.99705	0.99927	0.99602
F_1	0.99912	1.00035	1.00038	0.99901	0.99978	0.99822
C_8/F_9	1.00222	1.01790	1.01098	1.00044	0.99214	1.00319
F_8/F_9	1.01710	1.01309	1.01216	1.03037	1.02437	1.03853
F_5/F_9	1.00075	1.01386	1.00014	0.99905	0.97944	1.01227
F_1/F_9	0.99908	1.01221	1.00055	0.99737	0.99101	0.99818
k_∞	1.00134	0.97525	0.99888	1.00413	1.01698	1.00363

Table S.A.I.4 C(SRAC-FM)/E values for two rod heterogeneity for reaction rates, lattice average reaction rate ratios and k_∞.

	CORE					
	1	2	3	4	5	6
C_8	0.9742 (1.00%)	0.9725 (0.30%)	0.9633 (1.00%)	0.9536 (0.80%)	0.9789 (0.30%)	0.9712 (0.80%)
F_8	0.9903 (0.80%)	0.9909 (0.50%)	1.0036 (0.50%)	1.0018 (1.20%)	0.9994 (0.70%)	0.9917 (0.90%)
F_5	0.9909 (1.20%)	0.9979 (0.30%)	0.9964 (0.70%)	0.9994 (0.50%)	0.9948 (0.70%)	0.9998 (0.60%)
F_9	0.9976 (1.40%)	1.0039 (0.30%)	1.0142 (1.00%)	1.0125 (0.80%)	0.9988 (0.80%)	1.0336 (1.10%)
F_1	———	———	———	———	———	———
C_8/F_9	0.9751 (2.20%)	1.0357 (1.50%)	1.0013 (2.00%)	1.0455 (2.80%)	1.0400 (2.00%)	1.0543 (3.00%)
F_8/F_9	1.0010 (2.50%)	1.1176 (2.00%)	1.0696 (2.30%)	1.0610 (2.60%)	0.9302 (2.40%)	1.0678 (2.80%)
F_5/F_9	0.9971 (2.00%)	1.0426 (1.50%)	1.0758 (1.80%)	1.0584 (1.80%)	1.0684 (1.70%)	1.0555 (2.10%)
F_1/F_9	0.9480 (4.50%)	1.0109 (2.50%)	1.0345 (3.50%)	———	———	———
k_∞	1.0005 (1.10%)	0.9888 (0.80%)	0.9902 (1.50%)	———	———	———

Table V.A.I Modified VIM results being considered fundamental mode effect on two-rod heterogeneity for reaction rates, lattice average reaction rate ratios and k_∞.
[VIM-FM = VIM-NFM x (SRAC-FM / SRAC-NFM)[a]]

	CORE					
	1	2	3	4	5	6
C_8	0.96144 (0.558%)	0.98966 (0.368%)	0.96647 (0.566%)	0.95813 (0.569%)	0.99247 (0.447%)	0.96285 (0.491%)
F_8	0.93196 (0.473%)	0.96158 (0.718%)	0.94047 (0.445%)	0.95733 (0.525%)	0.96502 (0.448%)	0.94764 (0.428%)
F_5	1.26936 (0.539%)	1.00055 (0.400%)	1.14301 (0.468%)	1.09407 (0.385%)	0.99914 (0.504%)	1.17773 (0.512%)
F_9	1.91495 (0.700%)	1.00314 (0.315%)	1.57137 (0.816%)	1.44299 (0.592%)	1.00081 (0.360%)	1.70586 (0.641%)
F_1	1.39875 (0.601%)	0.74094 (18.5%)	1.22178 (0.580%)	1.15663 (0.507%)	0.73728 (18.5%)	1.27907 (0.465%)
C_8/F_9	0.06767 (0.529%)	0.15607 (0.327%)	0.08719 (0.448%)	0.09761 (0.375%)	0.15049 (0.371%)	0.07881 (0.386%)
F_8/F_9	0.01007 (0.412%)	0.02063 (0.277%)	0.01233 (0.328%)	0.01541 (0.272%)	0.02156 (0.275%)	0.01281 (0.314%)
F_5/F_9	0.98595 (0.418%)	1.15124 (0.212%)	1.07353 (0.311%)	1.10313 (0.251%)	1.09623 (0.257%)	1.00208 (0.303%)
F_1/F_9	1.67453 (0.418%)	1.48193 (0.136%)	1.79198 (0.312%)	1.84954 (0.254%)	1.43368 (0.448%)	1.75665 (0.372%)
k_∞	1.04360 (0.188%)	0.89610 (0.182%)	0.98758 (0.192%)	1.07290 (0.180%)	1.08901 (0.205%)	1.10470 (0.178%)

[a] Modification factor calculated by SRAC as shown in Table S.A.I.3.

Table V.A.1.2 Two-rod heterogeneity for reaction rates, lattice average reaction rate ratios and k_∞ (VIM-NFM[a]).

	CORE					
	1	2	3	4	5	6
C_8	0.96145 (0.558%)	0.99076 (0.368%)	0.96648 (0.566%)	0.95804 (0.569%)	0.99178 (0.447%)	0.96286 (0.491%)
F_8	0.93197 (0.473%)	0.96155 (0.718%)	0.94046 (0.445%)	0.95735 (0.525%)	0.96503 (0.448%)	0.94765 (0.428%)
F_5	1.26978 (0.539%)	1.00024 (0.400%)	1.14263 (0.468%)	1.09494 (0.385%)	0.99934 (0.504%)	1.17972 (0.512%)
F_9	1.91963 (0.700%)	1.00199 (0.315%)	1.56986 (0.816%)	1.44726 (0.592%)	1.00154 (0.360%)	1.71268 (0.641%)
F_1	1.39998 (0.601%)	0.74068 (18.5%)	1.22132 (0.580%)	1.15778 (0.507%)	0.73744 (18.5%)	1.28135 (0.465%)
C_8/F_9	0.06752 (0.529%)	0.15333 (0.327%)	0.08624 (0.448%)	0.09757 (0.375%)	0.15168 (0.371%)	0.07856 (0.386%)
F_8/F_9	0.00990 (0.412%)	0.02036 (0.277%)	0.01218 (0.328%)	0.01496 (0.272%)	0.02105 (0.275%)	0.01233 (0.314%)
F_5/F_9	0.98521 (0.418%)	1.13550 (0.212%)	1.07338 (0.311%)	1.10418 (0.251%)	1.11924 (0.257%)	0.98993 (0.303%)
F_1/F_9	1.67608 (0.418%)	1.46405 (0.136%)	1.79099 (0.312%)	1.85442 (0.254%)	1.44669 (0.448%)	1.75985 (0.372%)
k_∞	1.04220 (0.188%)	0.91884 (0.182%)	0.98869 (0.192%)	1.06849 (0.180%)	1.07083 (0.205%)	1.10070 (0.178%)

[a] Fundamental mode effect has not been considered yet.

Table V.A.1.3 C(VIM-FM)/E values for two rod heterogeneity for reaction rates, lattice average reaction rate ratios and k_∞ .

	CORE					
	1	2	3	4	5	6
C_8	0.9751 (1.15%)	0.9916 (0.47%)	0.9772 (1.15%)	0.9591 (0.98%)	0.9955 (0.54%)	0.9775 (0.94%)
F_8	0.9893 (0.93%)	0.9903 (0.87%)	1.0026 (0.67%)	1.0035 (1.31%)	0.9949 (0.83%)	0.9902 (1.00%)
F_5	1.0034 (1.32%)	0.9976 (0.50%)	1.0106 (0.84%)	1.0056 (0.63%)	0.9932 (0.86%)	1.0006 (0.79%)
F_9	0.9984 (1.56%)	0.9981 (0.44%)	0.9996 (1.29%)	1.0098 (1.00%)	0.9929 (0.88%)	1.0203 (1.27%)
F_1	———	———	———	———	———	———
C_8/F_9	0.9779 (2.26%)	1.0308 (1.54%)	0.9942 (2.05%)	1.0351 (2.83%)	1.0336 (2.03%)	1.0508 (3.02%)
F_8/F_9	0.9970 (2.53%)	1.1032 (2.02%)	1.0722 (2.32%)	1.0555 (2.61%)	0.9174 (2.42%)	1.0587 (2.82%)
F_5/F_9	0.9979 (2.04%)	1.0390 (1.51%)	1.0402 (1.83%)	1.0516 (1.82%)	1.0551 (1.72%)	1.0582 (2.12%)
F_1/F_9	0.9407 (4.52%)	1.0081 (2.50%)	1.0240 (3.51%)	———	———	———
k_∞	0.9987 (1.12%)	0.9902 (0.82%)	0.9965 (1.51%)	———	———	———

Table R.A.I Comparison between SRAC and VIM results on two rod heterogeneity for reaction rates and lattice average reaction rate ratios and k_∞ (SRAC-NFM / VIM-NFM)[a].

	CORE					
	1	2	3	4	5	6
C_8	0.99904 (0.558%)	0.98069 (0.368%)	0.98573 (0.566%)	0.99426 (0.569%)	0.98338 (0.447%)	0.99354 (0.491%)
F_8	1.00093 (0.473%)	1.00058 (0.718%)	1.00097 (0.445%)	0.99833 (0.525%)	1.00454 (0.448%)	1.00152 (0.428%)
F_5	0.98746 (0.539%)	1.00035 (0.400%)	0.98598 (0.468%)	0.99385 (0.385%)	1.00165 (0.504%)	0.99920 (0.512%)
F_9	0.99917 (0.700%)	1.00574 (0.315%)	1.01458 (0.816%)	1.00265 (0.592%)	1.00602 (0.360%)	1.01308 (0.641%)
F_1	0.99440 (0.601%)	1.35130 (18.5%)	0.99709 (0.580%)	0.99762 (0.507%)	1.35774 (18.5%)	1.00388 (0.465%)
C_8/F_9	0.99719 (0.529%)	1.00463 (0.327%)	1.00719 (0.448%)	1.01004 (0.375%)	1.00626 (0.371%)	1.00331 (0.386%)
F_8/F_9	1.00404 (0.412%)	1.01326 (0.277%)	0.99754 (0.328%)	1.00468 (0.272%)	1.01378 (0.275%)	1.00892 (0.314%)
F_5/F_9	0.99920 (0.418%)	1.00349 (0.212%)	1.00636 (0.311%)	1.00645 (0.251%)	1.01261 (0.257%)	0.99745 (0.303%)
F_1/F_9	1.00772 (0.418%)	1.00281 (0.136%)	1.01026 (0.312%)	1.00991 (0.254%)	1.00064 (0.448%)	1.01302 (0.372%)
k_∞	1.00187 (0.188%)	0.99860 (0.182%)	0.99366 (0.192%)	0.99305 (0.180%)	0.99325 (0.205%)	0.99863 (0.178%)

[a] (SRAC-NFM / VIM-NFM) = (SRAC-FM / VIM-FM)

4.2 Unit Pin for BOL and EOL

The important core physics parameters such as conversion ratio, k_∞ and migration area are shown in Table S.B.Ⅰ(SRAC) and Table V.B.Ⅰ(VIM). The ratios of SRAC and VIM results are also shown in Table R.B.Ⅰ. Other voluminous cross-sections and reaction rates are tabulated in Appendix Ⅰ-Ⅲ. For this problem, 11 solutions including the SRAC and VIM results were presented at the 2nd specialists' meeting. The dependences of k_∞ with void fraction obtained by SRAC and VIM are shown in Fig.4.1 (V_m/V_f=0.6) and Fig.4.2 (V_m/V_f=1.1) in contrast to other solutions.

In this benchmark, a series of the VIM calculations was performed under the condition that the upper limit of neutron energy range was 15MeV according to the benchmark specifications. On the other hand, the previous VIM calculation, of which results were presented at the first NEACRP benchmark[45], were performed with the upper limit of 10 MeV according to the SRAC energy structure. The difference of k_∞ between the previous VIM results and the presented ones is shown in Table R.B.Ⅰ.2 and Fig.4.3.

Table S.B.Ⅰ	Conversion ratio, migration area and k_∞ with void fraction ratio (SRAC).
Table V.B.Ⅰ	Conversion ratio, migration area and k_∞ with void fraction ratio (VIM).
Table R.B.Ⅰ	Comparison (SRAC/VIM) on conversion ratio, migration area and k_∞ with void fraction ratio.
Table R.B.Ⅰ.2	Effect of upper limit of neutron energy range on void reactivity.
Table S.B.Ⅱ.1 - S.B.Ⅶ.9	Cross-sections and reaction rates (SRAC) : Appendix Ⅰ.
Table V.B.Ⅱ.1 - V.B.Ⅶ.9	Cross-sections and reaction rates (VIM) : Appendix Ⅱ.
Table R.B.Ⅱ.1 - R.B.Ⅶ.9	Cross-sections and reaction rates (SRAC/VIM) : Appendix Ⅲ.
Fig.4.1	Dependence of k_∞ on void fraction (V_m/V_f=0.6).
Fig.4.2	Dependence of k_∞ on void fraction (V_m/V_f=1.1).
Fig.4.3	Effect of upper limit of neutron energy range on void reactivity.

Table S.B.1 Conversion ratio, migration area and k_∞ with void fraction ratio (SRAC).

Burnup			0		50 GWd/t	
V_m/V_f			0.6	1.1	0.6	1.1
Void Fraction (%)	0	k_∞	1.09338	1.12727	1.01412	1.03916
	0	Migration Area[a]	56.75	58.38	○	○
	0	Conversion Ratio	0.840	0.745	0.890	0.797
	45	k_∞	1.09532	1.08355	1.02642	0.99597
	90	k_∞	1.11099	1.07636	1.05681	0.99206
	99	k_∞	1.12343	1.06894	1.07078	0.97800
	99	Migration Area[a]	215.36	377.94	○	○

[a] Calculated from D/Σ_a for $B^2=0.0060cm^{-2}$.

Table V.B.I Conversion ratio, migration area and k_∞ with void fraction ratio (VIM).

Burnup			0		50 GWd/t	
V_m/V_f			0.6	1.1	0.6	1.1
Void Fraction (%)	0	k_∞	1.09586±0.00180	1.12695±0.00195	1.01320±0.00155	1.03696±0.00197
	0	Migration Area	———	———	○	○
	0	Conversion Ratio	0.837±0.002	0.744±0.002	0.896±0.002	0.799±0.002
	45	k_∞	1.10006±0.00176	1.08648±0.00188	1.02814±0.00160	0.99730±0.00180
	90	k_∞	1.11616±0.00175	1.08297±0.00157	1.06100±0.00155	0.99778±0.00156
	99	k_∞	1.12966±0.00133	1.07215±0.00142	1.07593±0.00134	0.97869±0.00144
	99	Migration Area	———	———	○	○

Table R.B.I Comparison (SRAC/VIM) on conversion ratio, migration area and k_∞ with void fraction ratio.

Burnup			0		50 GWd/t	
V_m/V_f			0.6	1.1	0.6	1.1
Void Fraction (%)	0	k_∞	0.9977±0.0016	1.0003±0.0017	1.0009±0.0015	1.0021±0.0019
	0	Migration Area	———	———	○	○
	0	Conversion Ratio	1.0034±0.0026	1.0013±0.0025	0.9920±0.0023	0.9980±0.0027
	45	k_∞	0.9957±0.0016	0.9973±0.0017	0.9983±0.0016	0.9987±0.0018
	90	k_∞	0.9954±0.0016	0.9940±0.0016	0.9961±0.0016	0.9943±0.0016
	99	k_∞	0.9945±0.0012	0.9970±0.0013	0.9952±0.0013	0.9993±0.0015
	99	Migration Area	———	———	○	○

Table R.B.I.2 Effect of upper limit of energy range on void reactivity.

		C.R.	k_∞			
V_m/V_f	Void	0 %	0 %	45 %	90 %	99 %
0.6	VIM-1[a]	0.834±0.003	1.0959±0.0022	1.0945±0.0030	1.1132±0.0018	1.1249±0.0021
	SRAC	0.840	1.0934	1.0953	1.1110	1.1234
	VIM-2[b]	0.837±0.002	1.0959±0.0018	1.1001±0.0018	1.1162±0.0018	1.1297±0.0013
1.1	VIM-1[a]	0.747±0.003	1.1287±0.0024	1.0848±0.0022	1.0773±0.0024	1.0706±0.0023
	SRAC	0.745	1.1273	1.0836	1.0764	1.0689
	VIM-2[b]	0.744±0.002	1.1270±0.0020	1.0865±0.0019	1.0830±0.0016	1.0722±0.0014

a Previous VIM : Upper limit of energy range = 10MeV according to the energy structure of SRAC.
b Presented VIM : Upper limit of energy range = 15MeV according to the benchmark specifications.

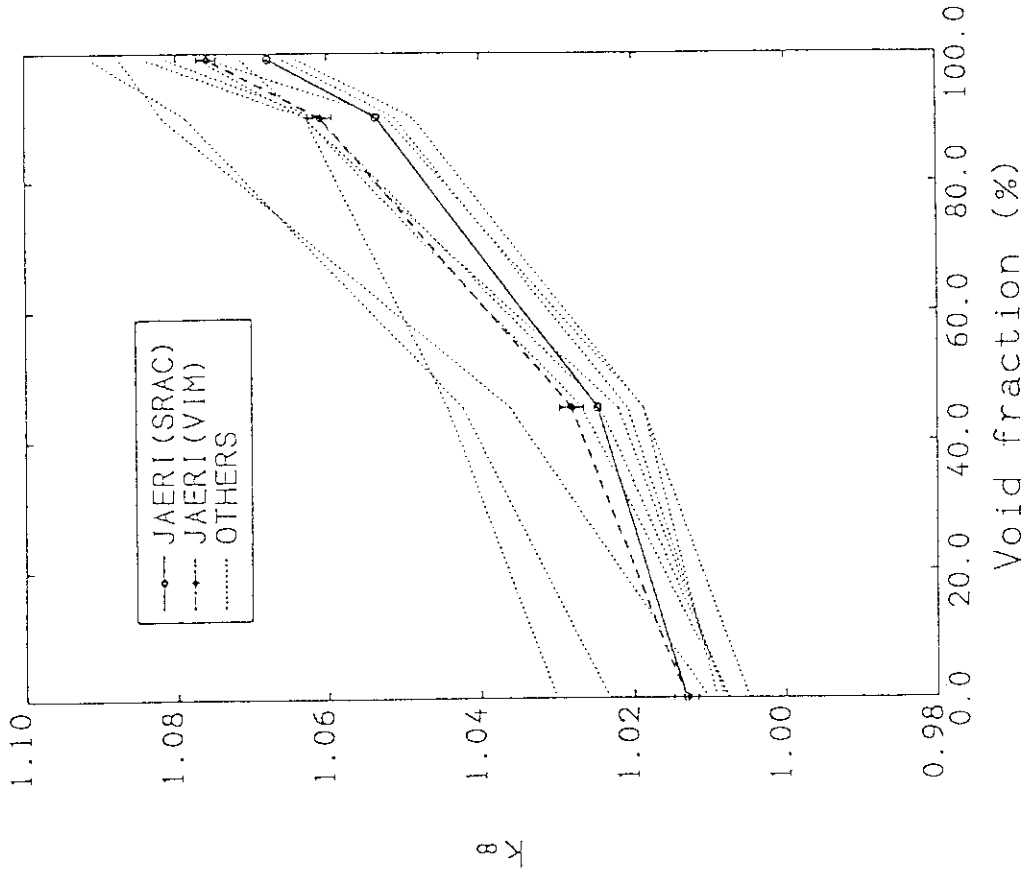

(b) EOL

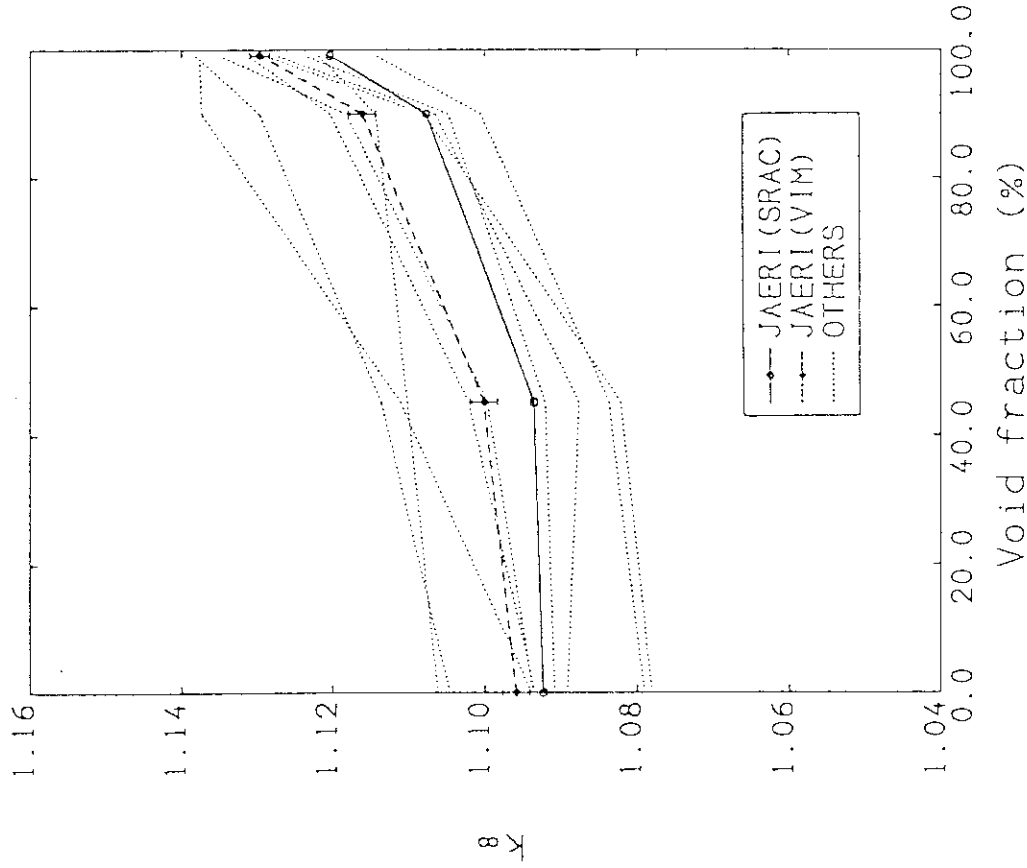

(a) BOL

Fig.4.1 Dependence of k_∞ on void fraction (V_m/V_r=0.6).

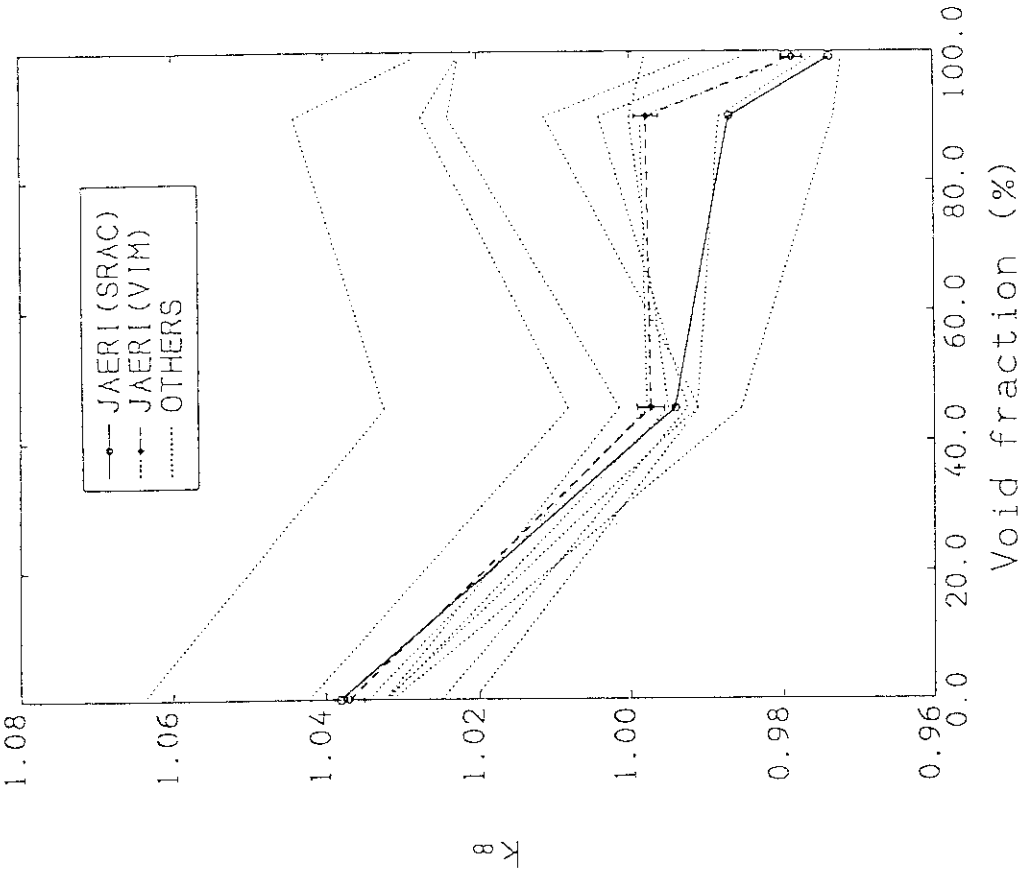

(b) EOL

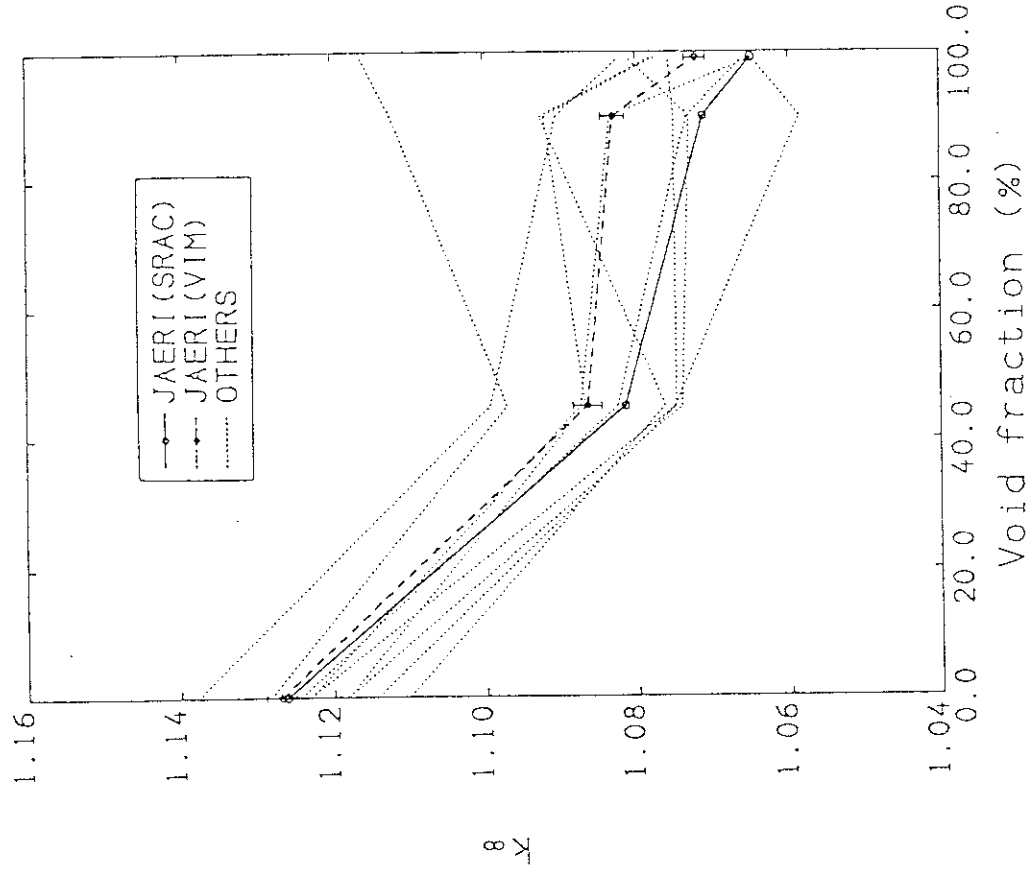

(a) BOL

Fig.4.2 Dependence of k_∞ on void fraction (V_m/V_r=1.1).

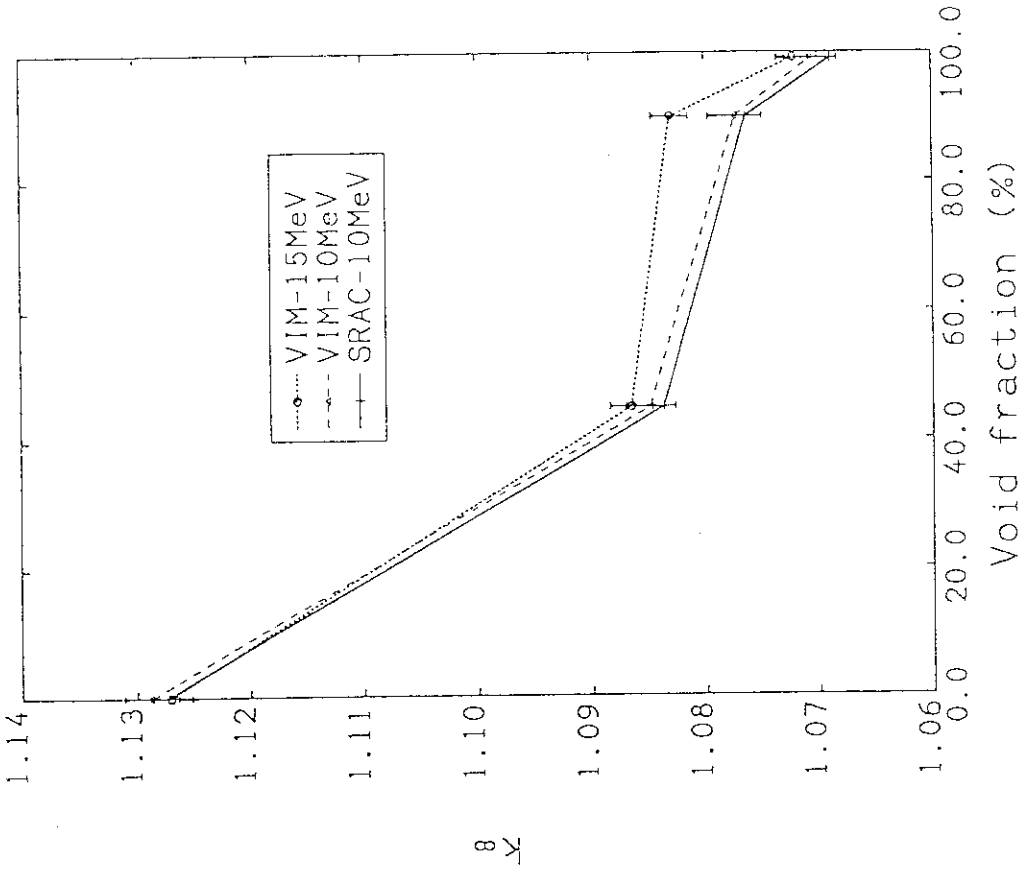

(b) V_m/V_f=1.1 (BOL)

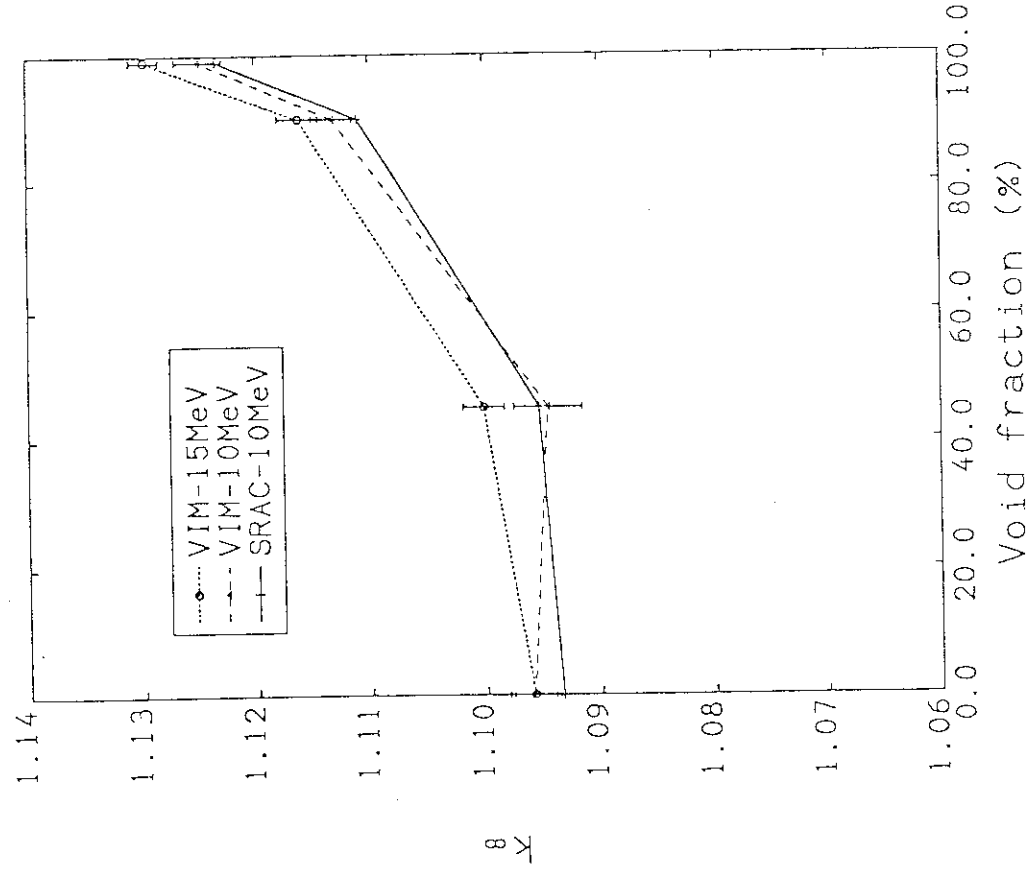

(a) V_m/V_f=0.6 (BOL)

Fig.4.3 Effect of upper limit of neutron energy range on void reactivity.

4.3 Discussions

The following observations were drawn from the calculated results:

- PROTEUS Analyses

1) The fundamental mode effect is not so significant for the two-rod heterogeneity of reaction rates (cf. Table S.A.Ⅰ.3).
2) The fundamental mode effect should be considered for the lattice average reaction rate ratios and k_∞ especially in the voided cores. The effect is predominant for F_8/F_9 and this tendency seems to increase in highly enriched Pu cores (cf. Table S.A.Ⅰ.3).

   As far as the sub-critical cores (cores 2,3) are concerned, it is obserbed that the fundamental mode factors for k_∞ become less than 1.0.
3) The SRAC and VIM results show fairly good agreements with each other for most of the requested parameters, however predominant differences are observed for the two-rod heterogeneity factors of F_1 in the full voided cases, although the statistical errors are large. (further check will be needed) (cf. Table R.A.Ⅰ)
4) Both of the k_∞'s obtained by SRAC and VIM show good agreement with the experimental values, while some deviations are observed for the two-rod heterogeneity factors and the cell average reaction rates. The deviations are large especially for the reaction rate ratios of F_8/F_9, where the maximum deviation is more than 10%. (cf. Table S.A.Ⅰ.4 and Table V.A.Ⅰ.3.)

- Unit Pin Cell Analyses

1) The SRAC and VIM results show good agreements within the statistical errors in the 0% voided cases, while the SRAC code tends to underestimate the k_∞ value in highly voided cases. This tendency is observed also in the PROTEUS analysis. (cf. Fig.4.1, Fig.4.2, Table R.A.Ⅰ)

2) The upper limit of energy range (10MeV) in the SRAC code seems to be one of the reason for underestimate of k_∞ value in highly voided cases. (cf. Fig.4.3, Table R.B.Ⅰ.2) Further investigation will

be needed on the effects of (n,xn) reactions and fission spectrum(ξ) in high energy range above 10MeV.

5. Additional Investigations on Resonance Treatment and Geometrical Modelling

The conventional methods based on the narrow resonance(NR) approximation and/or the intermediate resonance(IR) approximation have been used for analyses of the HCLWR lattices. The accuracy of the IR approximation has been extensively verified and successfully used in thermal reactor analyses. The NR approximation has been verified for its use in higher resonance energy region, say, higher than few hundred eV; hence it has been generally adopted for fast reactor analyses. On the other hand, regarding the accuracy of these approximations as insufficient, the more rigorous methods based on direct numerical-methods have been developed for accurate evaluation of effective resonance cross sections. For example, a code PEACO using an ultrafine energy group structure was developed on the basis of the collision probability method. It was incorporated into the SRAC system for the treatment of all resolved resonances of lower energy region($E \leq 130.07$ eV).

Geometrical modelling is another problem for accurate treatment of cell calculations. Hexagonal cell model with mirror reflection boundary condition is most preferable for the HCLWR lattice analyses. Cylindrical cell models have been conventionally used for geometrical representation. Some computer code may use square cell model because of the limitation of geometrical modelling. The white reflection boundary condition has been also used to save computational time. Consequently, the methods and models used for the HCLWR analyses are needed to be verified by more rigorous method.

The purpose of the present study is to evaluate the accuracy of the results obtained by the conventional methods and to clarify the range of their validation with emphasis on the effect of the resonance calculation method and the geometrical modelling on the HCLWR cell. Here, the important core physics parameters, such as neutron multiplication factor, conversion ratio and void coefficient etc. will be considered. In recent HCLWR feasibility studies, the concept of uranium core convertible reactor has been investigated[2,3,13]. Therefore, additional calculated results will be also shown for light water moderated UO_2 fuel lattice.

5.1 Model and Method

The basic geometry under study is identical with that of the NEACRP benchmark problem (unit pin for BOL), where two hexagonal geometries with the moderator to fuel volume ratio(V_m/V_f) of 0.6 and 1.1 were considered. Particularly, the hexagonal cell with the V_m/V_f of 1.1 and the fissile Pu enrichment of 7.0% is selected as a reference case, since recent HCLWR design studies are concentrated on this range of V_m/V_f[2,3,13]. As far as a void analysis is concerned, the calculation was carried out for the reference cell, while other calculations were carried out changing the V_m/V_f from 0.5 to 1.9 and maintaining the fissile enrichment. A cylindrical and square cell which keep the value of V_m/V_f were also used for comparison.

A series of calculations were performed using SRAC code system, and the calculation scheme was based on the multigroup collision probability method with the 90 group library (Table 3.8) generated on the basis of JENDL-2 file. The resonance shielding factors were prepared for all heavy resonance nuclei in the resonance energy region, which was divided into two energy ranges, i.e., the upper resonance energy range above 275.36eV and the lower one below 275.36eV to thermal cut-off energy. The resonance shielding under the assumption of the NR approximation is taken into account also for light and/or intermediate nuclei with resonance structure for the whole energy range. Hence, the cladding material was treated as a resonance material, since the effect of total absorption of cladding material is considerably high in the HCLWR analyses.

In the SRAC code, the thermal cut-off energy can be selected from any energy mesh boundary of the SRAC energy structure between 0.414 and 3.93eV. The cut-off energy of 3.93eV was selected here to accurately calculate the reaction rate of the 1.06eV resonance of ^{240}Pu[38].

In the upper resonance energy range, the effective cross sections are obtained by the table-look-up method of Bondarenko type table based on the NR approximation. The cross sections in the lower range are calculated by one of the three methods; the table-look-up method based on the IR approximation, the table-look-up method based on the NR approximation and the direct numerical method using ultrafine groups, i.e., PEACO routine.

On the assessment of the resonance treatment methods, the IR

approximation, NR approximation and PEACO method were investigated, where a hexagonal cell with the mirror boundary condition was used. For the geometrical effect study, the resonance method was based on the PEACO method, and the mirror and white boundary conditions were applied for each geometry. In cylindrical geometry, however, the mirror boundary condition was excluded because of the Newmach effect[60]. The calculated results were checked and verified on comparison with those of the continuous energy Monte Carlo code VIM. Here, the VIM library whose upper energy limit was 10MeV was used according to the energy structure of the SRAC library.

5.2 Results and Disscussions

- Effects of Resonance Calculation Method

(1) k_∞ and Conversion Ratio

Figure 5.1 represents the change of the k_∞ and conversion ratio depending on the V_m/V_f for MOX fuelled lattice. From these results, it is seen that the results of the PEACO routine shows a reasonably good agreement with those of the VIM code for whole range of V_m/V_f under investigation. The IR method overestimates the k_∞ by about 0.8% at V_m/V_f=0.5, as compared with that from the PEACO routine, but the deviation decreases with increasing V_m/V_f. As for the conversion ratio, the IR method shows a fairly good agreement with those from the PEACO routine at higher V_m/V_f values. The NR method fairly underestimates the k_∞ by about 1%, consequently it gives higher values for the conversion ratio compared with the results from the PEACO routine. The reason why large discrepancies are occurred at lower V_m/V_f is that the differences among the capture cross sections for U^{238} calculated by each resonance method are large in this range of V_m/V_f. Figure 5.2 shows the capture cross sections for U^{238} obtained by each resonance calculation method and the VIM code. It is seen that the PEACO routine shows a reasonably good agreement with the results from the VIM code; the IR method underestimate the capture cross sections, as compared with those from the PEACO routine, while the NR method overestimates this cross section, particularly for the resonances lying at the lower energy range.

For the UO_2 fuelled cases as shown in Fig.5.3, the k_∞ obtained from the IR method also shows a fairly good agreement with the PEACO rou-

tine for the whole range of V_m/V_f under study. And the NR method shows the similar tendency for k_∞ to that of the MOX fuelled cases, but the differences are smaller than those of the MOX fuelled cases. The values of the conversion ratio are almost the same between the IR and PEACO method at at higher V_m/V_f, whereas the NR method shows a better agreement with the results of the PEACO routine at the lower V_m/V_f. As seen from Fig.5.4, the neutron spectrum is much softer for the UO_2 case than the MOX fuelled case, so that the effects of the resonance calculation methods is generally smaller in the UO_2 fuelled cell.

On the basis of the above results, it can be concluded that the IR method shows a reasonably good agreement with the PEACO routine at higher V_m/V_f for both MOX and UO_2 fuelled cases, while it gives a little deviation at lower V_m/V_f. It can be also concluded that the NR method is not very accurate for both MOX and UO_2 fuelled cases.

(2) Moderator Void Coefficient

In order to validate whether the conventional methods, that is, the IR and NR methods can be applied for an accurate estimation of voiding effects, the cell calculations were performed using the three methods for the cell of 7% enriched fissile plutonium and with V_m/V_f of 1.1. The k_∞ was determined for void fractions 0, 45, 90 and 99%. The calculated results are shown in Fig.5.5.

The results indicate that k_∞ decreases monotonically with increasing void fraction for all the three methods and that the results of the PEACO routine show a reasonably good agreement with those of the VIM code within statistical error. For the void coefficient, the IR method shows a tendency giving slightly higher with increasing void fraction, as compared with the results from the PEACO routine, whereas the NR method gives lesser negative values with increasing void fraction.

(3) Doppler Coefficient

In order to investigate the effect of the resonance methods on the calculation accuracy of the Doppler coefficient, the k_∞ was determined for fuel temperature 600, 900 and 1200°K assuming that the moderator temperature was constant with 600°K. The calculated results are shown in Table 5.1.

From Table 5.1, both the NR and IR methods give higher values for the Doppler coefficient, as compared with those of the PEACO

routine. The discrepancies of the IR method are much smaller than those of the NR method.

(4) Influences of Fissile Plutonium Enrichment

Table 5.2 shows the k_∞ and conversion ratio calculated by the three methods changing the fuel enrichment. The NR method underestimates the k_∞ by about 1%, as compared with the values from the PEACO routine, and consequently shows higher conversion ratio by about 2.5%. The IR method shows a relatively small difference from the results of the PEACO routine for both two quantities.

It can be concluded that the relative tendency among the three methods is not so much changed by the fissile plutonium enrichment, though the IR method is likely to be in a agreement with the PEACO routine.

- Effects of Geometrical Modelling and Boundary Condition

(1) k_∞ and Conversion Ratio

It is evident the hexagonal cell model with the mirror boundary condition is an exact way for the HCLWR lattice analyses. But some computer code can not treat the hexagonal geometry and may sometimes use the white boundary condition to save computation time. Considering this situation, all of the calculated results were normalized to those obtained by the cylindrical model based on the Wigner-Seitz approximation, which is commonly applicable to any type of cell geometry.

Table 5.3 gives the values for k_∞ obtained from different geometry models at the V_m/V_f=1.1, where these values are compared with those from the VIM code. It is seen that the results calculated by SRAC show a good agreement with those of the VIM code in each geometry and that the cases with the mirror boundary condition give higher values in both the SRAC and VIM results.

Figure 5.6 represents the variations of k_∞ and conversion ratio for the MOX fuelled geometries, which are normalized to those of the cylindrical geometry with the white boundary condition. For the geometries with the exact mirror boundary condition, the differences from the cylindrical geometry are more than 0.5% and 1% in k_∞ and conversion ratio, respectively.

The results for the UO_2 fuelled cell are shown in Fig.5.7. The

same tendency to the MOX fuelled cases is observed, however, the differences are smaller than the MOX fuelled cases, and tend to converge with increasing V_m/V_f.

From the above results, it can be concluded that the results of the cylindrical cell with the white boundary condition fairly deviates from those of the geometries with the mirror boundary condition. Such the deviations are attributed mainly to the different boundary conditions rather than the different geometry type.

Table 5.1 Effect of resonance treatment methods on Doppler coefficient.
(Hexagonal, Mirror, V_m/V_f=1.1, Pu^{fis}=7%)

Method	Temp. (°K)	k_∞	Doppler coef. ($\Delta k/k/$ °K)
PEACO	600	1.1406	
			-3.94E-5
	900	1.1271	
			-3.16E-5
	1200	1.1165	
NR	600	1.1312	
			-4.24E-5
	900	1.1169	
			-3.46E-5
	1200	1.1053	
IR	600	1.1452	
			-4.02E-5
	900	1.1314	
			-3.26E-4
	1200	1.1203	

Table 5.2 Effect of resonance treatment methods on k_∞ and conversion ratio depending on Pu^{fis} enrichment. (Hexagonal, Mirror, V_m/V_f=1.1)

Pu^{fis} Enrich. (%)	k_∞			Conversion ratio		
	PEACO	NR	IR	PEACO	NR	IR
4.0	1.0589	1.0488 (-0.95%)	1.0609 (+0.19%)	0.8507	0.8733 (+2.7%)	0.8480 (-0.32%)
7.0	1.1271	1.1169 (-0.90%)	1.1314 (+0.38%)	0.7449	0.7637 (+2.5%)	0.7367 (-1.1%)
10.0	1.1942	1.1833 (-0.91%)	1.1995 (+0.44%)	0.6577	0.6740 (+2.5%)	0.6467 (-1.7%)

( ) : Deviations from PEACO

Table 5.3 Comparison of k_∞'s calculated by SRAC and VIM in different geometries. (Pu^{fis}=7%, V_m/V_f=1.1)

Cell Geometry	Boundary Condition	SRAC	VIM
Hexagonal	Mirror	1.1271	1.1270±0.0020
	White	1.1194	1.1199±0.0020
Square	Mirror	1.1291	1.1268±0.0020
	White	1.1203	1.1254±0.0022
Cylindrical	White	1.1193	1.1185±0.0021

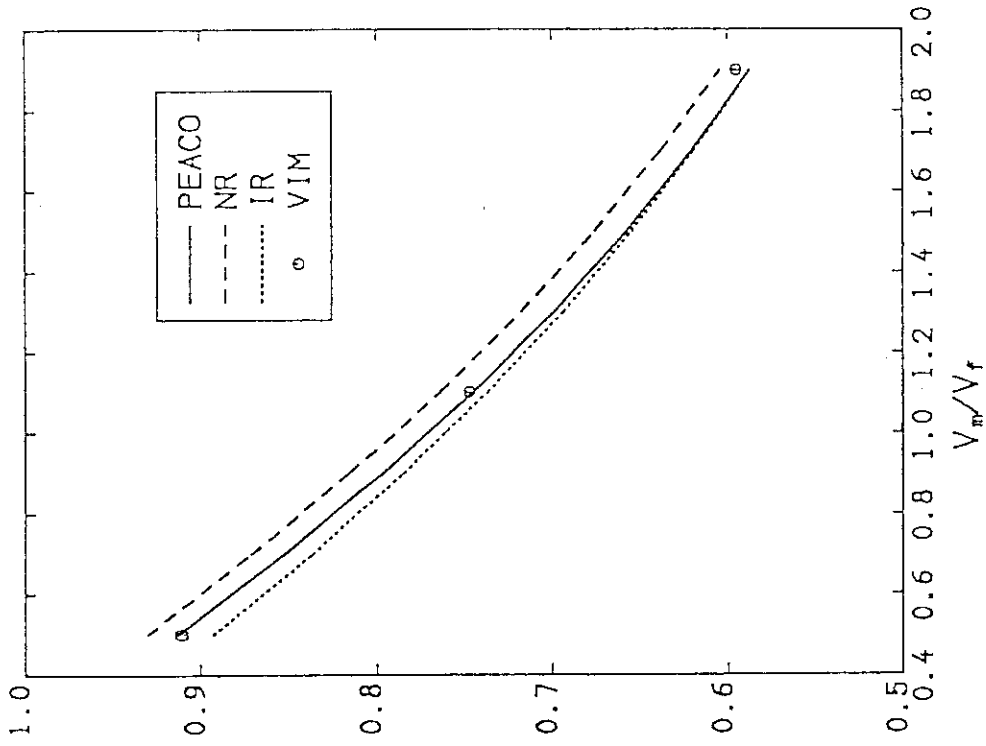

(b) Conversion ratio vs V_m/V_f

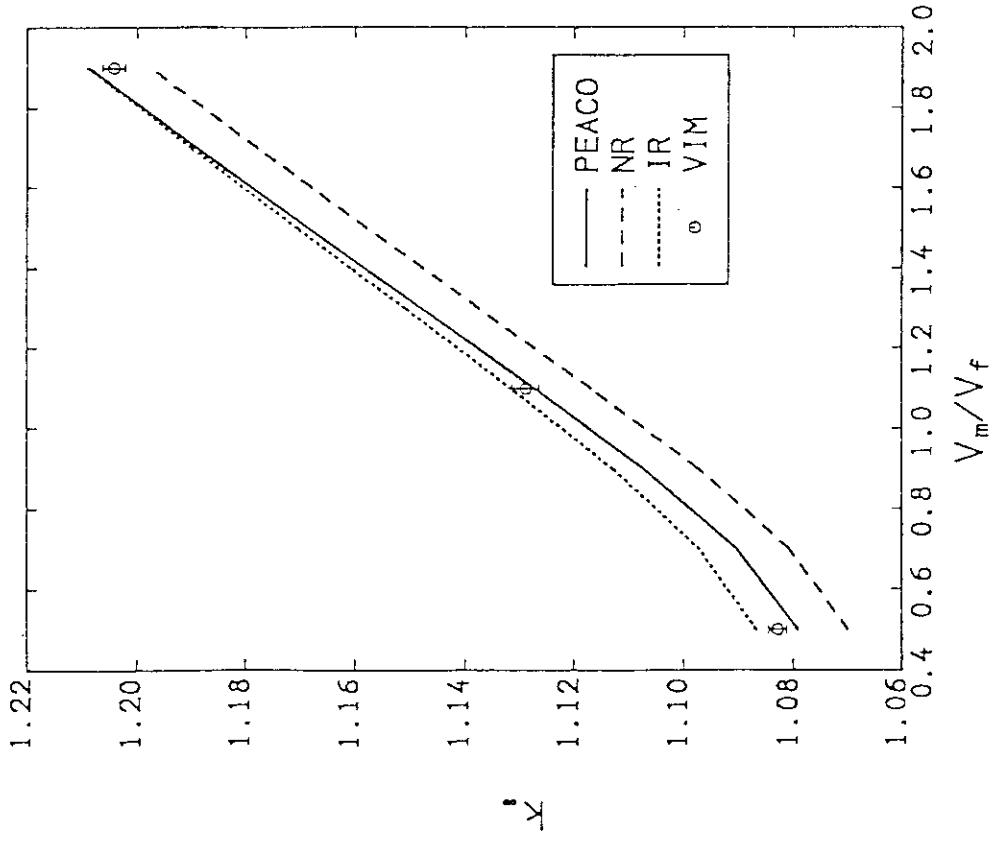

(a) k-infinity vs V_m/V_f

Fig.5.1 Comparison of effects of resonance treatment methods in MOX fuel cell.
(Hexagonal, Mirror, Pu^{fiss}=7%)

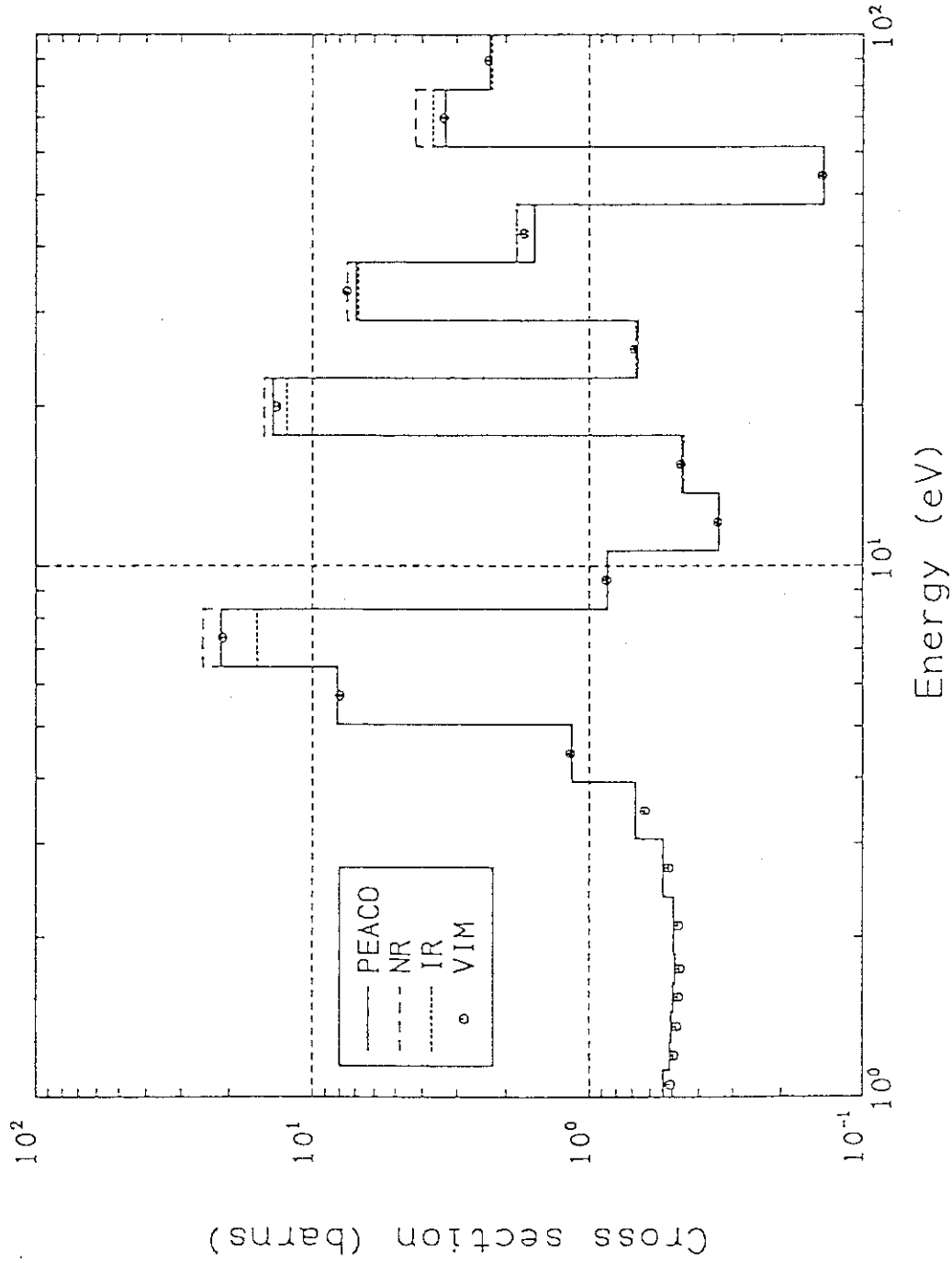

Fig.5.2 Comparison of effective capture cross sections for ^{238}U calculated by each resonance method. (V_m/V_r=0.5, Pu^{fis}=7%)

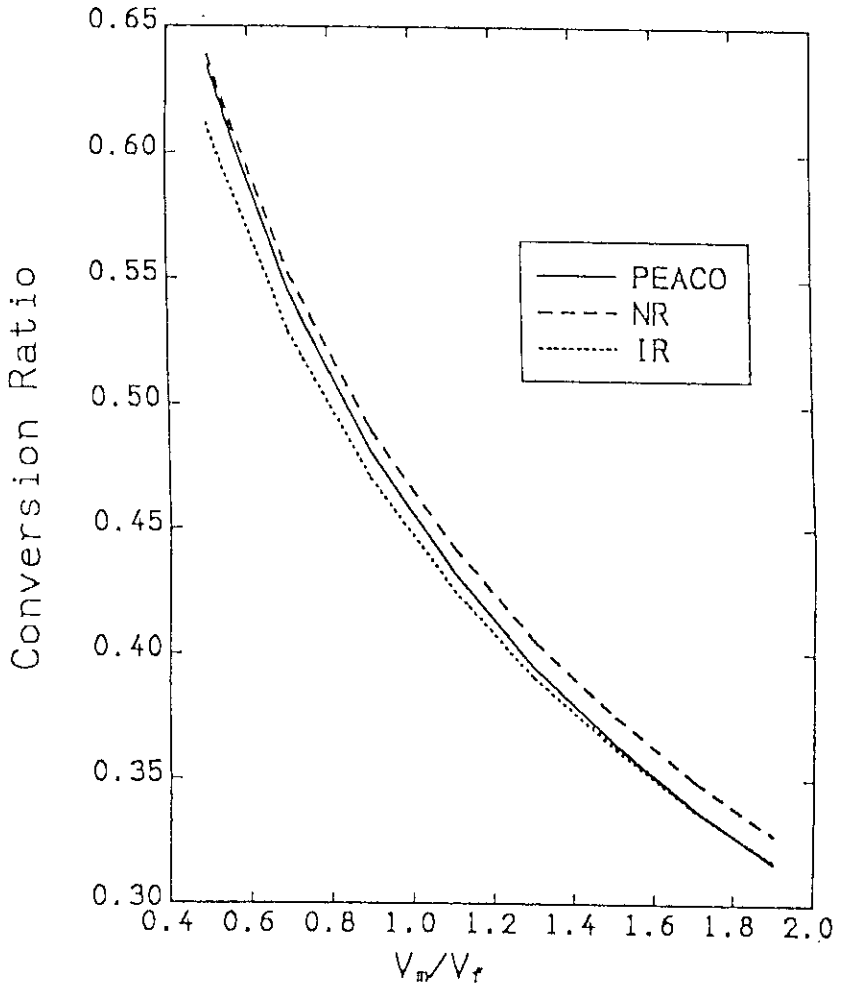

(a) k-infinity vs V_m/V_f

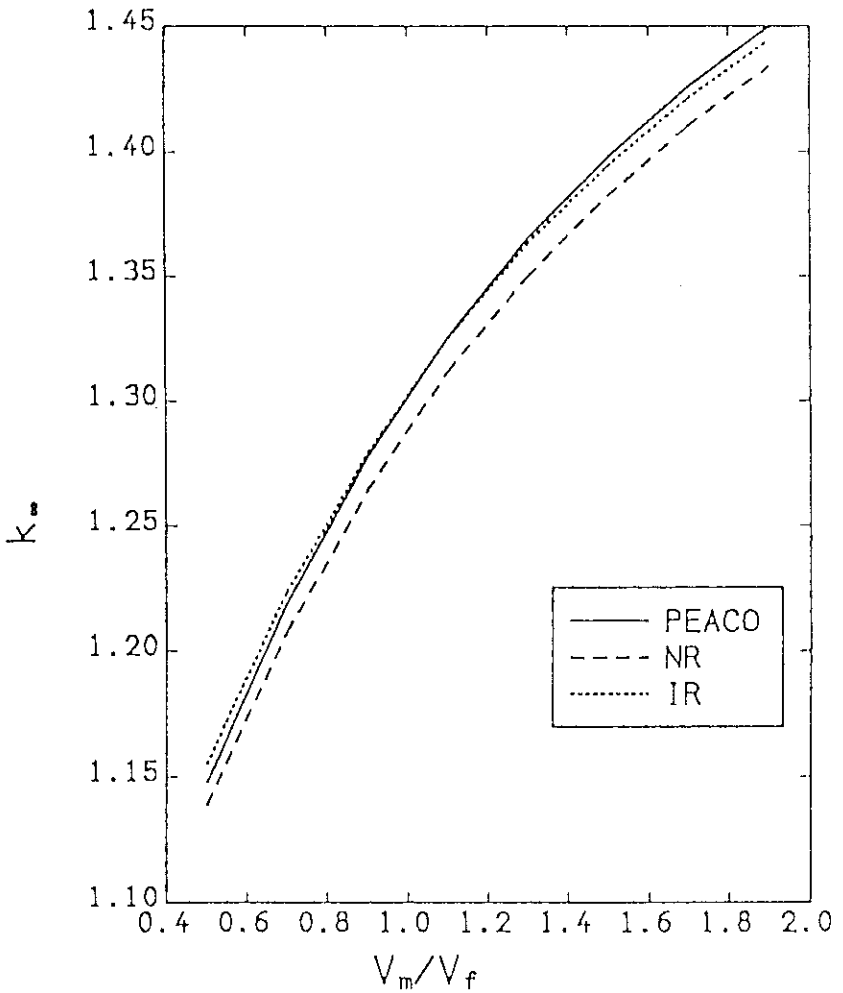

(b) Conversion ratio vs V_m/V_f

Fig.5.3 Comparison of effects of resonance treatment methods in UO_2 fuel cell. (Hexagonal, Mirror, ^{235}U=7%)

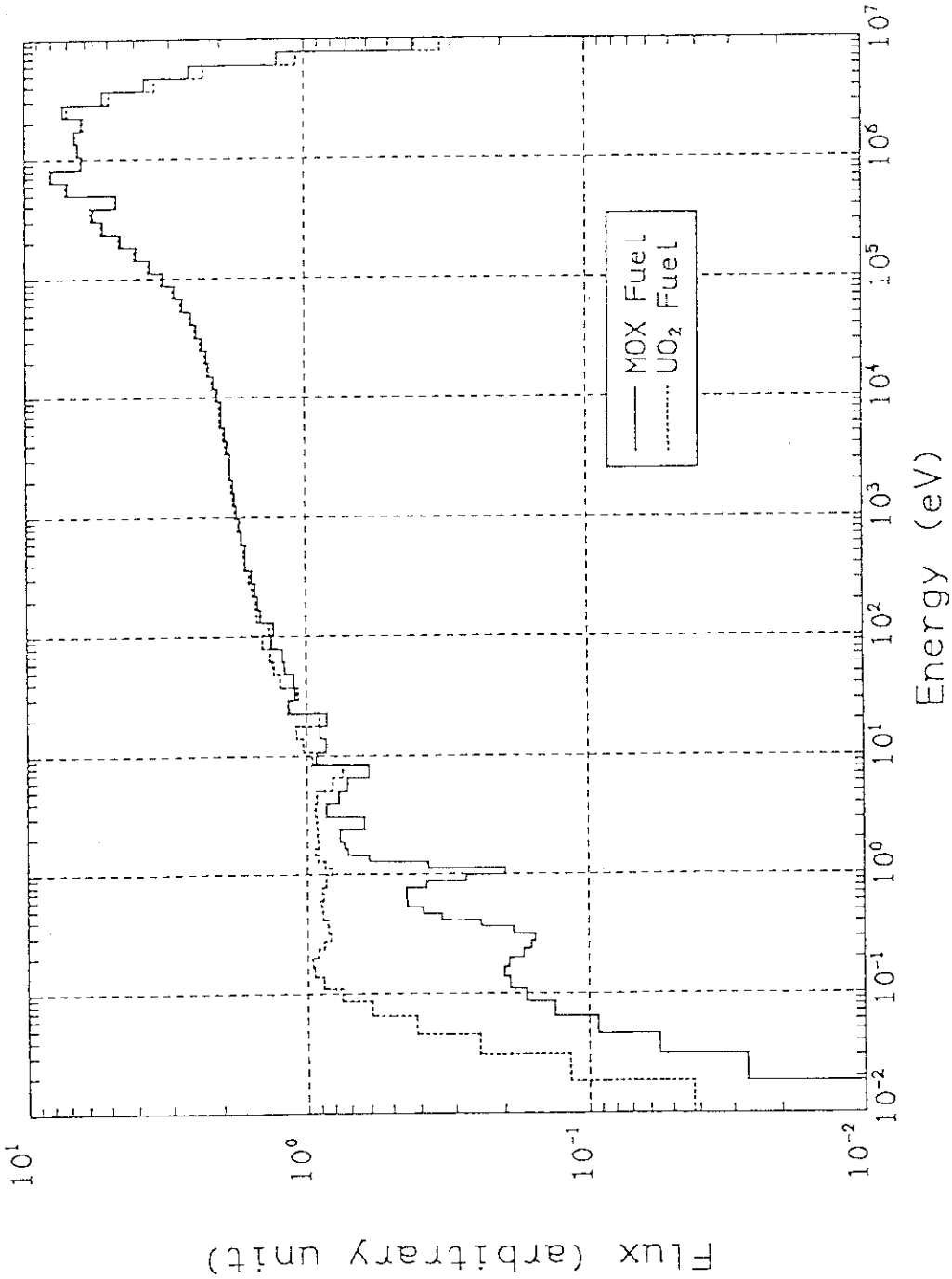

Fig.5.4 Neutron spectra in MOX and UO_2 fuel cell (V_m/V_f=1.1, Enrichment=7%).

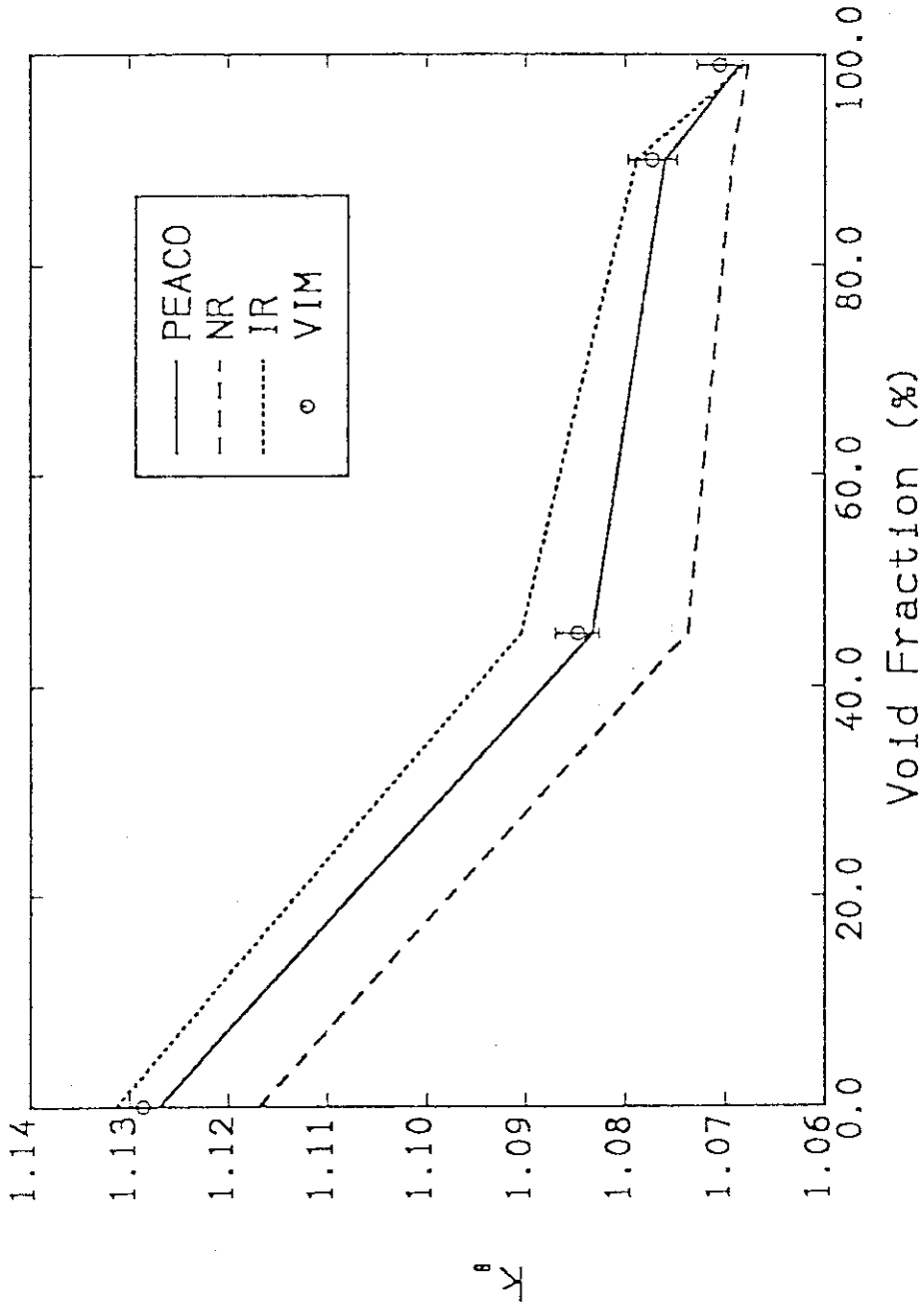

Fig.5.5 Comparison of effects of resonance treatment methods on void characteristics. (Hexagonal, Mirror, Pu^{fiss}=7%)

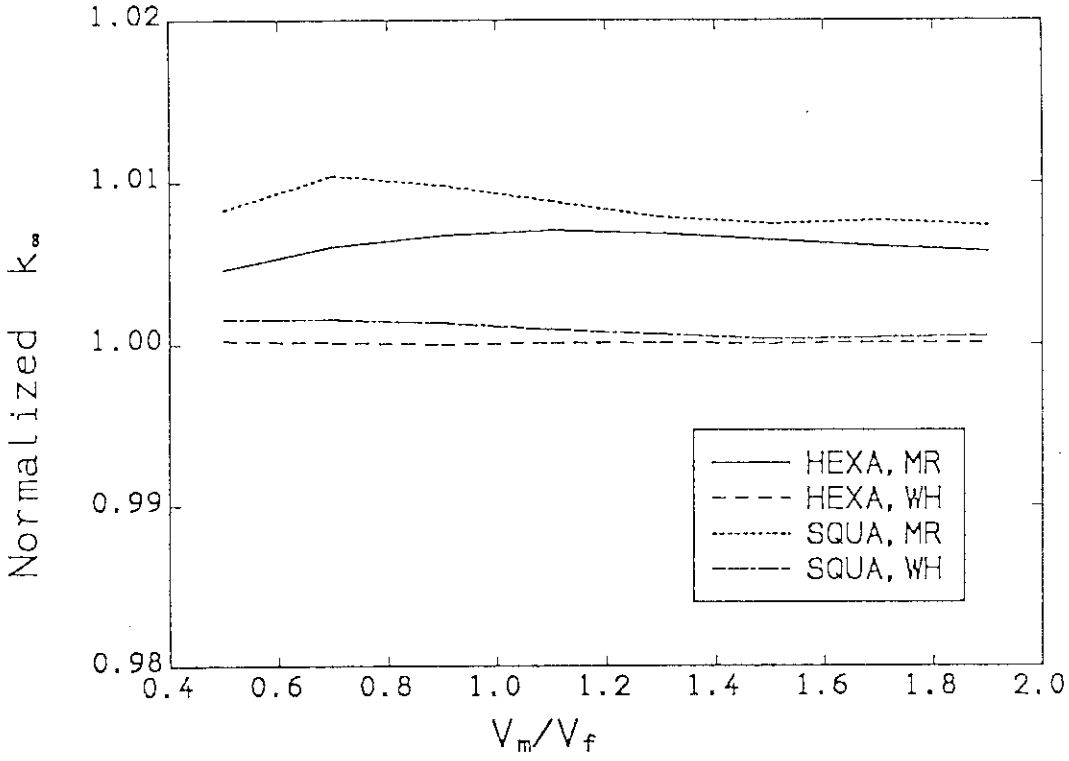

(a) Normalized k-infinity vs V_m/V_f

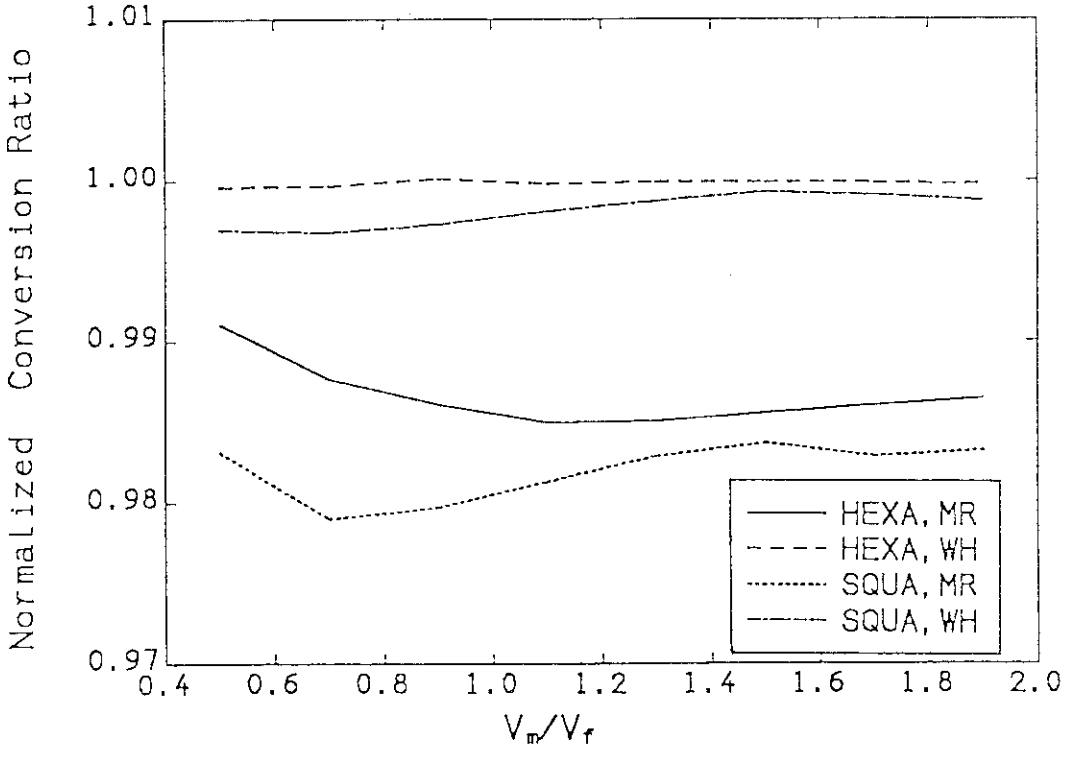

(b) Normalized Conversion ratio vs V_m/V_f

Fig.5.6 Comparison of geometrical model effects in MOX fuel cell (Pufis=7.0%, PEACO, Normalized to cylinder).

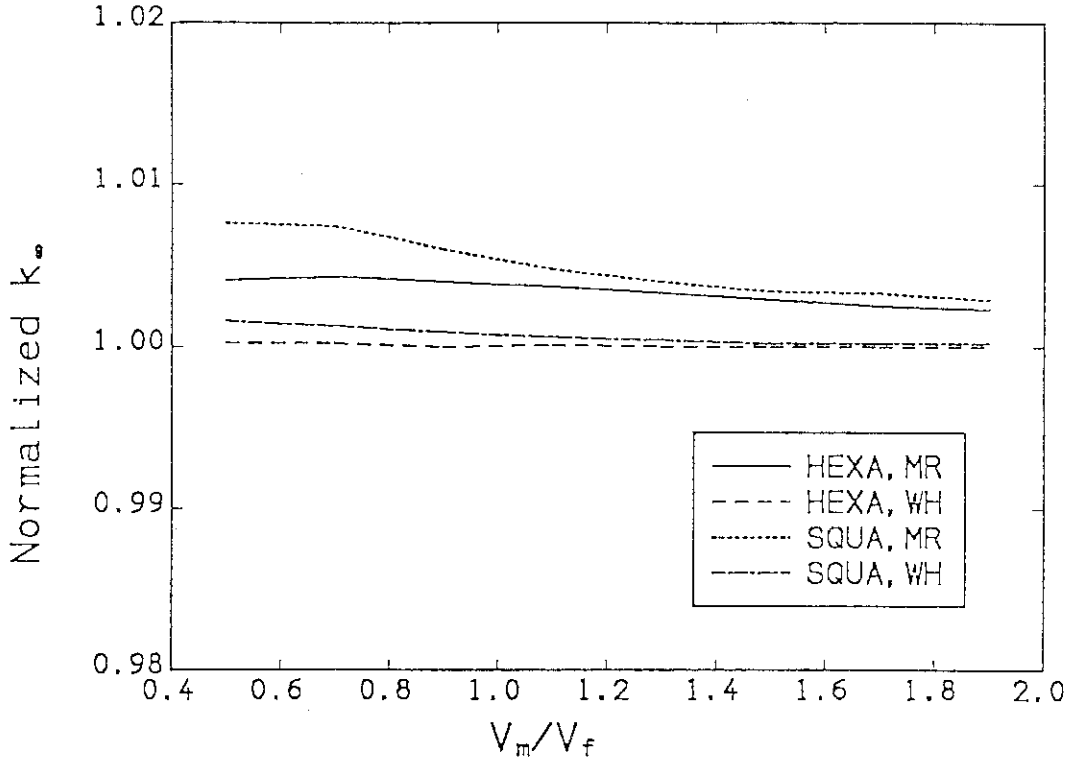

(a) Normalized k-infinity vs V_m/V_f

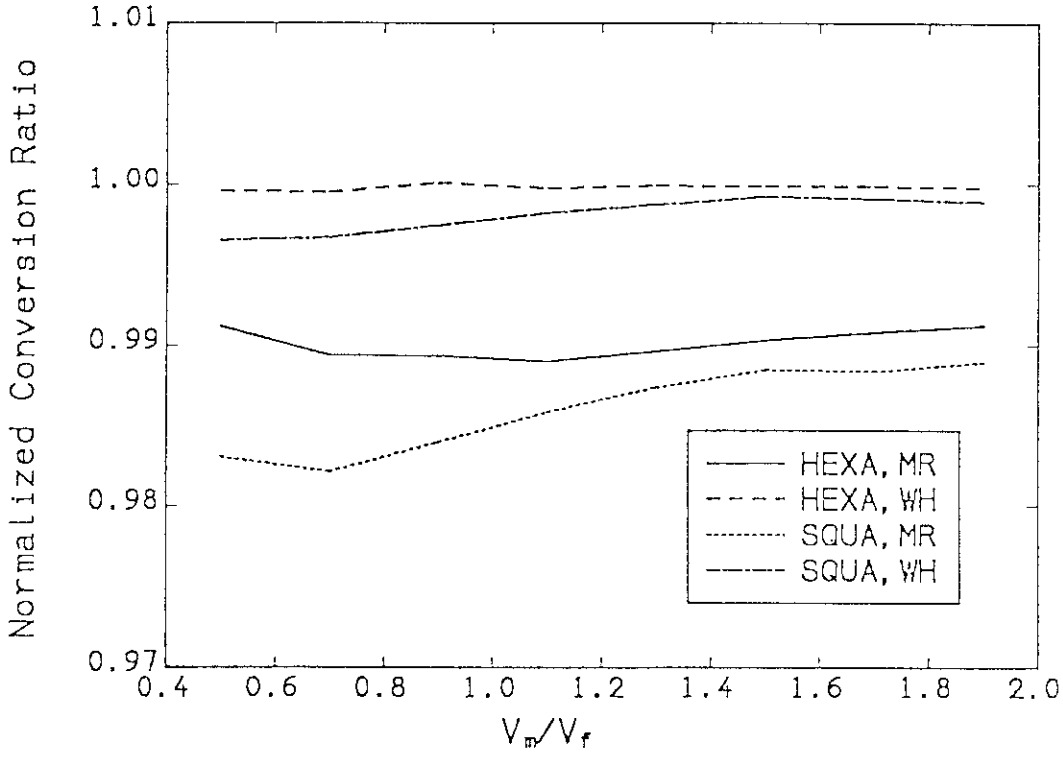

(b) Normalized Conversion ratio vs V_m/V_f

Fig.5.7 Comparison of geometrical model effects in UO_2 fuel cell (U^{235}=7.0%, PEACO, Normalized to cylinder).

6. Summary

For the second NEACRP benchmark comparison on HCLWR lattices, a series of calculations for the benchmark problems (PROTEUS-LWHCR and Unit Pin Cell for BOL and EOL) was carried out by using the continuous energy Monte Carlo code VIM and the deterministic code SRAC based on a collision probability method. Both of their libraries were based on the JENDL-2 file. The obtained VIM result is useful as a reference solution to check the data and method for the deterministic codes which use the JENDL-2 library.

The SRAC results showed fairly good agreement with the VIM results for most of requested parameters. This means the applicability of the SRAC code to the HCLWR lattices is reasonably high, as far as the methodology is concerned. Nevertheless, some deviations were observed between the calculated results and the experimental values. Further investigation will be needed as for the library data to decrease the deviations.

Additional calculations based on the benchmark problem were also carried out with emphasis on the resonance calculation methods and geometrical modelling. From this investigation, it is recommended to use the direct resonance calculation method as like the PEACO routine does, especially for the case of harder neutron spectrum. It should be also noted that the white boundary condition is not so accurate in HCLWR lattices as expected in current LWR lattices with UO_2 fuel.

The deviations of the core physics parameters among the all of submitted benchmark results have been somewhat improved, as compared with those at the previous benchmark, however, it seems insufficient still now. It is expected to accumulate other reference solutions based on different nuclear data file and other experimental data.

Acknowledgements

We are much indebted to Takamasa Mori, JAERI, and Kunio Kaneko, JAIS for their generous instructions on the usage of the VIM library processing code system. Thanks are also due to Hiroshi Akie, JAERI, not only for his valuable comments but also for his helps on data checking.

References

1) Barré B., Gambier G. and Golinelli C. : "Development Trends for Future French Pressurized Water Reactors," Nucl. Technol., 80, 11 (1988).

2) Saji E. et al. : "Feasibility Studies on High Conversion Pressurized Water Reactors with Semitight Core Configurations," Nucl. Technol., 80, 18 (1988).

3) Umeoka T. et al. : "Current Status of High Conversion Pressurized Water Reactor Design Studies," Nucl. Technol., 80, 29 (1988).

4) Brogli R.H., Goetzmann C.A. and Kuczera B.J. : "Research and Development Efforts for the Light Water High Conversion Reactor," Nucl. Technol., 80, 61 (1988).

5) Märkl H., Goetzmann C.A. and Moldaschl H. : "KWU's High Conversion Reactor Concept -An Economical Evolution of Modern Pressurized Water Reactor Technology Toward Improved Uranium Ore Utilization," Nucl. Technol., 80, 65 (1988).

6) Courtaud M. et al. : "The French Thermal-Hydraulic Program Addressing Future Pressurized Water Reactors," Nucl. Technol., 80, 73 (1988).

7) Murao Y. and Hoji T. : "Numerical Simulation of Reflooding Behavior in Tight-Lattice Rod Bundles," Nucl. Technol., 80, 83 (1988).

8) Dreier J., Analytis G. and Chawla R. : "NEPTUN-Ⅲ Reflooding and Boiloff Experiments with an LWHCR Fuel Bundle Simulator: Experimental Results and Initial Code Assessment Efforts," Nucl. Technol., 80, 93 (1988).

9) Cigarini and Dalle Donne M. : "Thermohydraulic Optimization of Homogeneous and Heterogeneous Advanced Pressurized Water Reactors," Nucl. Technol., 80, 107 (1988).

10) Dalle Donne M. and Ferrero C. : "Loss of Coolant-Accident and Anticipated Transient Without Scram Calculations for Homogeneous and Heterogeneous Advanced Pressurized Water Reactors," Nucl. Technol., 80, 133 (1988).

11) Erbacher F.J. and Wiehr K. : "Experimental Investigations on the Reflooding and Deformation Behavior of an Advanced Pressurized Water Reactor Tight-Lattice Fuel Rod Bundle in a Loss-of-Coolant Accident," Nucl. Technol., 80, 153 (1988).

12) Petersen C., Schanz G and Leistikow S. : "High Temperature

Behavior of CrNi-Steel DIN Material No. 1.4970 Cladding Material with Respect to Advanced Pressurized Water Reactor Safety Considerations," Nucl. Technol., 80, 161 (1988).

13) Hittner D., Millot J.P. and Vallee A. : "Preliminary Results of the Feasibility Study on the Convertible Spectral Shift Reactor Concept," Nucl. Technol., 80, 181 (1988).

14) Radkowsky A. and Shayer Z. : "The High Gain Light Water Breeder Reactor with a Uranium-Plutonium Cycle," Nucl. Technol., 80, 190 (1988).

15) Ronen Y. and Leibson M.J. : "Analysis of ^{235}U-Pu-^{233}U-Fueled Tight-Lattice Water Reactors," Nucl. Technol., 80, 216 (1988).

16) Ronen Y., Leibson M.J. and Radkowsky A. : "On the Reactivity Void Response of an Advanced Pressurized Water Reactor," Nucl. Technol., 80, 225 (1988).

17) Yamamoto M. et al. : "Validation of the HELIOS.HX. Code for High Conversion Light Water Reactor," Nucl. Technol., 80, 240 (1988).

18) Takano H. et al. : "The Effect of Fission Products on Burnup Characteristics in High Conversion Light Water Reactors," Nucl. Technol., 80, 250 (1988).

19) Iijima S., Yoshida T. and Yamamoto T. : "Fission Product Model for Lattice Calculation on High Conversion Boiling Water Reactor," Nucl. Technol., 80, 263 (1988).

20) Bergeron J. et al. : "The French Neutronic Program Addressing the Requirements of Future Pressurized Water Reactors," Nucl. Technol., 80, 269 (1988).

21) Penndorf K. : "Constraints on the Plutonium Recovery Achievable in Homogeneous Pressurized Water Reactors," Nucl. Technol., 80, 282 (1988).

22) Zeggel W. et al. : "Analytical Methods in the High Conversion Reactor Core Design," Nucl. Technol., 80, 292 (1988).

23) Seiler R. et al. : "Investigation of the Void Coefficient and Other Integral Parameters in the PROTEUS-LWHCR Phase Ⅱ Program," Nucl. Technol., 80, 311 (1988).

24) Johansson E. : "Reactor Physics Calculations for Alternative Fuel Recycling Strategies Using Tight Pressurized Water Reactor Lattices," Nucl. Technol., 80, 324 (1988).

25) Ishiguro Y. and Okumura K. : "Pancake Core High Conversion Light Water Reactor Concept," Nucl. Technol., 84, 331 (1989).

26) Okumura K. and Nishina K. : "Computational Breakdown of the High Conversion Light Water Reactor Infinite Lattice Void Reactivity into Contributing Nuclides and Energy Groups," to be appeared in Nucl. Sci. Eng.

27) Edlund M.C. : "High Conversion Ratio Plutonium Recycle in Pressurized Water Reactors," Ann. Nucl. Energy, **2**, 801(1975).

28) Uotinen V.O. et al. : "Technical Feasibility of a Pressurized Water Reactor Design with a Low-Water-Volume-Fraction Lattice," EPRI-NP-1833, (1981)

29) Oldekop W., Berger H.D. and Zeggel W. : "General Features of Advanced Pressurized Water Reactors with Improved Fuel Utilization," Nucl. Technol., **59**, 212 (1982).

30) Penndorf K., Schult F. and Bünemann D. : "Some Neutron Physical Consequences of Maximizing the Conversion Ratio of Pressurized Water Reactors Operated in the Uranium-Plutonium Cycle," Nucl. Technol., **59**, 256 (1982).

31) Chawla R. : "Breakdown of the k_∞ Void Coefficient of a LWHCR Lattice," Atomkernenegie, **37**, 303 (1981).

32) Hettergott E., Chawla R. and Gmür : "Analysis of Test Lattice Experiments in the Light Water High-Conversion Reactor PROTEUS," EPRI-NP-3190 (1983).

33) Chawla R. et al. : "LWHCR Moderator-Voidage Experiments," Unpublished Reports (1983).

34) Chawla R. et al. : "Reactivity and Reaction Rate Ratio Changes with Moderator Voidage in a Light Water High Converter Reactor Lattice," Nucl. Technol., **67**, 360 (1984).

35) Osugi T. et al. : "Reactor Physics Experiments and Analyses on High Conversion Light Water Reactor," *Proc. ANS. Int. Reactor Physics Conf.*, **2** 361 (1988).

36) Osugi T. et al. : "Investigation on Criticality and Infinite Multiplication Factor of High Conversion Light Water Reactor Using Zone-Type FCA-HCLWR Core Fueled with Enriched Uranium," J. Nucl. Sci. Technol., **26**, 477 (1989).

37) Takano H. and Akie H. : "Effect of Transplutonium Nuclides on Burnup Reactivity Changes in HCLWRs," J. Nucl. Sci. Technol., **24**, 501 (1987).

38) Akie H. and Takano H. : "Treatment of Resonances of Plutonium Isotopes at eV Energy Region in Tight Lattice Cell," J. Nucl. Sci. Technol., **28**, 391 (1988).

39) Ishiguro Y., Tsuchihashi K. and Sasaki M. : "Physics Problems on Analysis of High Conversion Pressurized Water Reactor (HCPWR) with Tighter Pitch Lattices (An Analysis of PROTEUS-LWHCR Cores by SRAC System)," JAERI-M 84-180 (1984) (in Japanese).

40) Ishiguro Y. and Kaneko K. : "Generalized Dancoff Factor in Complex Lattice Arrangement," J. Nucl. Sci. Technol., **22**, 853 (1985).

41) Ishiguro Y. et al. : "Physics Problems on Analysis of High Conversion Light Water Reactor (Ⅱ) (Analysis of PROTEUS Experiment by SRAC)," JAERI-M 86-039 (1986) (in Japanese).

42) Tsuchihashi K. et al. : "SRAC: JAERI Thermal Reactor Standard Code System for Reactor Design and Analysis," JAERI-1285 (1983).

43) Tsuchihashi K. et al. : "Revised SRAC code system," JAERI-1302 (1983).

44) Ishiguro Y. et al. : "Proposal of Benchmarks on Data and Methods to calculate Reactor Characteristics in High Conversion Light Water Reactors," Unpublished Reports (1986).

45) Akie H., Ishiguro Y. and Takano H. : "Summary Report on the International Comparison of NEACRP Burnup Benchmark Calculations for High Conversion Light Water Reactor Lattices," JAERI-M 88-200 (NEACRP-L-309) (1988).

46) Levitt L.B. and Lewis R.C. : "VIM-1, A Non-Multigroup Monte Carlo Code for Analysis of Fast Critical Assemblies," AI-AEC-12951, Atomic International (1970).

47) Milton L.J. : "VIM Users' Guide," Argonne National Laboratory, January (1980).

48) Mori T. et al. : "Development of Cross Section Library Preparation Code System for a Continuous Energy Monte Carlo Code," Unpublished Reports, (1987) (in Japanese).

49) Levitt L.B. : "The Probability Table Method for Treating Unresolved Resonances in Monte Carlo Criticality Calculations," Trans. Am. Nucl. Soc., **14**, 648 (1971).

50) Tsuchihashi K. : "Development, Validation and Applications of SRAC: JAERI Thermal Reactor Standard Neutronics Code System," J. Nucl. Sci. Technol., **26**, 23 (1989).

51) Okumura K., Ishiguro Y. and Doi E. : "Core Burnup Characteristics of High Conversion Light Water Reactor (I) - Core Analyses for HCLWR-J1 (V_m/V_p=0.8) -," JAERI-M 88-129 (1988) (in Japanese).

52) Okumura K., Ishiguro Y. and Kaneko K. : " Core Burnup Calculation

Method for Spectral Shift Reactor Using Fertile Rod," J. Nucl. Sci. Technol., 25, 948 (1988).

53) Ishiguro Y. : "PEACO-II; A Code for Calculation of Effective Cross Sections in Heterogeneous Systems," JAERI-M 5527 (1974).

54) Cullen D.E., UCRL-50400, 17, Part A-C (1979).

55) Nakagawa T. : "Program RESENDD (Version 84-07) : A Program for Reconstruction of Resonance Cross Sections from Evaluated Nuclear Data in the ENDF/B Format (Modified Version of RESEND)," JAERI-M 84-192 (1984).

56) MacFarlane R.E. et al., LA-7584-M (ENDF-272) (1978).

57) Otter J.M. et al. : "U3R: A code to Calculate Unresolved Resonance Cross Section Probability Table," AI-AEC-13024 (1972).

58) Honeck H.C. and Finch D.R. et al. : "FLANGE-Ⅱ (Version 71-1), A Code to Process Thermal Neutron Data from an ENDF/B Tape," DP-1278 (ENDF-152) (1971).

59) Berger H.D. : Private Communication, (1989).

60) Newmarch D.A. : "Errors Due to the Cylindrical Approximation in Lattice Calculation," AEEW-R34 (1960).

Appendix I Cross-Sections and Reaction Rates (SRAC)

Table List

===== TABLE S.8.II.1 CROSS-SECTIONS FOR U-235 =====

BURNUP		0 GWD/T		50 GWD/T	
VM / VF		0.6	1.1	0.6	1.1
SIGMA-A	FAST	1.7882E+00	1.7600E+00	1.7862E+00	1.7587E+00
	RESONANCE	2.6944E+01	3.0924E+01	2.7120E+01	3.1266E+01
	THERMAL	5.6834E+01	7.9403E+01	5.6667E+01	8.5750E+01
	1-GROUP	9.2389E+00	1.2660E+01	9.2448E+00	1.3066E+01
SIGMA-F	FAST	1.4779E+00	1.4688E+00	1.4768E+00	1.4680E+00
	RESONANCE	1.6748E+01	1.8875E+01	1.6855E+01	1.9066E+01
	THERMAL	4.4915E+01	6.5010E+01	4.4744E+01	7.0477E+01
	1-GROUP	6.1834E+00	8.6620E+00	6.1754E+00	8.9700E+00
SIGMA-P	FAST	3.7388E+00	3.7441E+00	3.7370E+00	3.7427E+00
	RESONANCE	4.0678E+01	4.5843E+01	4.0937E+01	4.6307E+01
	THERMAL	1.0908E+02	1.5788E+02	1.0866E+02	1.7116E+02
	1-GROUP	1.5126E+01	2.1160E+01	1.5108E+01	2.1908E+01

===== TABLE S.8.II.2 CROSS-SECTIONS FOR U-238 =====

BURNUP		0 GWD/T		50 GWD/T	
VM / VF		0.6	1.1	0.6	1.1
SIGMA-A	FAST	3.0072E-01	3.1941E-01	3.0149E-01	3.1991E-01
	RESONANCE	1.8426E+00	2.1596E+00	1.8841E+00	2.2067E+00
	THERMAL	5.6008E-01	6.0200E-01	5.5816E-01	6.2201E-01
	1-GROUP	7.0061E-01	8.2262E-01	7.1292E-01	8.3985E-01
SIGMA-F	FAST	1.3489E-01	1.6386E-01	1.3611E-01	1.6461E-01
	RESONANCE	1.5104E-04	1.3978E-04	1.5172E-04	1.3966E-04
	THERMAL	0.0000E+00	0.0000E+00	0.0000E+00	0.0000E+00
	1-GROUP	9.7900E-02	1.1354E-01	9.8804E-02	1.1375E-01
SIGMA-P	FAST	3.7714E-01	4.6046E-01	3.8048E-01	4.6247E-01
	RESONANCE	3.5037E-04	3.2425E-04	3.5194E-04	3.2397E-04
	THERMAL	0.0000E+00	0.0000E+00	0.0000E+00	0.0000E+00
	1-GROUP	2.7370E-01	3.1905E-01	2.7618E-01	3.1956E-01

===== TABLE S.8.II.3 CROSS-SECTIONS FOR PU239 =====

BURNUP		0 GWD/T		50 GWD/T	
VM / VF		0.6	1.1	0.6	1.1
SIGMA-A	FAST	1.9531E+00	1.9691E+00	1.9529E+00	1.9689E+00
	RESONANCE	2.3791E+01	2.8397E+01	2.4337E+01	2.9998E+01
	THERMAL	1.4315E+02	2.3217E+02	1.4896E+02	2.6691E+02
	1-GROUP	1.0124E+01	1.8236E+01	1.0236E+01	2.0129E+01
SIGMA-F	FAST	1.7384E+00	1.7708E+00	1.7390E+00	1.7711E+00
	RESONANCE	1.3373E+01	1.5964E+01	1.3635E+01	1.6763E+01
	THERMAL	9.4595E+01	1.5149E+02	9.7929E+01	1.7308E+02
	1-GROUP	6.4126E+00	1.1550E+01	6.4515E+00	1.2671E+01
SIGMA-P	FAST	5.2801E+00	5.4251E+00	5.2837E+00	5.4269E+00
	RESONANCE	3.8521E+01	4.5985E+01	3.9277E+01	4.8287E+01
	THERMAL	2.7249E+02	4.3637E+02	2.8210E+02	4.9858E+02
	1-GROUP	1.8670E+01	3.3495E+01	1.8783E+01	3.6724E+01

===== TABLE S.B.II.4 CROSS-SECTIONS FOR PU240 =====

BURNUP		0 GWD/T		50 GWD/T	
VM / VF		0.6	1.1	0.6	1.1
SIGMA-A	FAST	1.0268E+00	1.1021E+00	1.0300E+00	1.1041E+00
	RESONANCE	8.8884E+00	1.0187E+01	8.9736E+00	1.0598E+01
	THERMAL	2.5449E+02	2.9143E+02	2.3828E+02	2.9136E+02
	1-GROUP	7.6614E+00	1.5137E+01	7.1502E+00	1.5290E+01
SIGMA-F	FAST	7.5244E-01	8.4705E-01	7.5669E-01	8.4961E-01
	RESONANCE	2.1276E-01	2.0915E-01	2.1326E-01	2.1175E-01
	THERMAL	5.0678E-02	5.8148E-02	4.7540E-02	5.8235E-02
	1-GROUP	6.0133E-01	6.4499E-01	6.0474E-01	6.4622E-01
SIGMA-P	FAST	2.3164E+00	2.6257E+00	2.3299E+00	2.6338E+00
	RESONANCE	5.9231E-01	5.8227E-01	5.9372E-01	5.8950E-01
	THERMAL	1.4108E-01	1.6187E-01	1.3234E-01	1.6212E-01
	1-GROUP	1.8349E+00	1.9810E+00	1.8456E+00	1.9845E+00

===== TABLE S.B.II.5 CROSS-SECTIONS FOR PU241 =====

BURNUP		0 GWD/T		50 GWD/T	
VM / VF		0.6	1.1	0.6	1.1
SIGMA-A	FAST	2.2315E+00	2.2011E+00	2.2291E+00	2.1996E+00
	RESONANCE	4.0705E+01	5.1641E+01	4.0295E+01	5.1130E+01
	THERMAL	1.1745E+02	1.9211E+02	1.1975E+02	2.1610E+02
	1-GROUP	1.4192E+01	2.3009E+01	1.4039E+01	2.3941E+01
SIGMA-F	FAST	1.9444E+00	1.9288E+00	1.9427E+00	1.9277E+00
	RESONANCE	3.0776E+01	3.8785E+01	3.0444E+01	3.8413E+01
	THERMAL	8.9672E+01	1.4498E+02	9.1191E+01	1.6253E+02
	1-GROUP	1.0933E+01	1.7500E+01	1.0807E+01	1.8183E+01
SIGMA-P	FAST	5.9325E+00	5.9258E+00	5.9291E+00	5.9234E+00
	RESONANCE	9.0246E+01	1.1373E+02	8.9270E+01	1.1264E+02
	THERMAL	2.6295E+02	4.2513E+02	2.6740E+02	4.7658E+02
	1-GROUP	3.2226E+01	5.1502E+01	3.1857E+01	5.3506E+01

===== TABLE S.B.II.6 CROSS-SECTIONS FOR PU242 =====

BURNUP		0 GWD/T		50 GWD/T	
VM / VF		0.6	1.1	0.6	1.1
SIGMA-A	FAST	8.3334E-01	9.0090E-01	8.3636E-01	9.0277E-01
	RESONANCE	5.1139E+00	5.5329E+00	5.2069E+00	5.6283E+00
	THERMAL	1.9928E+02	1.7354E+02	2.1961E+02	1.7868E+02
	1-GROUP	5.5475E+00	9.0445E+00	5.7201E+00	9.2984E+00
SIGMA-F	FAST	5.9186E-01	6.7518E-01	5.9563E-01	6.7748E-01
	RESONANCE	2.7819E-02	2.7439E-02	2.8015E-02	2.7583E-02
	THERMAL	1.4839E-01	1.3450E-01	1.6182E-01	1.3880E-01
	1-GROUP	4.3921E-01	4.8040E-01	4.4218E-01	4.8096E-01
SIGMA-P	FAST	1.8367E+00	2.1075E+00	1.8486E+00	2.1146E+00
	RESONANCE	7.8120E-02	7.7051E-02	7.8669E-02	7.7457E-02
	THERMAL	4.1668E-01	3.7769E-01	4.5440E-01	3.8976E-01
	1-GROUP	1.3601E+00	1.4955E+00	1.3694E+00	1.4972E+00

===== TABLE S.B.II.7 CROSS-SECTIONS FOR AM241 =====

BURNUP		0 GWD/T		50 GWD/T	
VM / VF		0.6	1.1	0.6	1.1
SIGMA-A	FAST	1.7517E+00	1.7910E+00	1.7529E+00	1.7919E+00
	RESONANCE	2.4800E+01	2.9550E+01	2.3801E+01	2.8512E+01
	THERMAL	3.3295E+02	3.6037E+02	3.0747E+02	3.5352E+02
	1-GROUP	1.3695E+01	2.3545E+01	1.2677E+01	2.3078E+01
SIGMA-F	FAST	7.2803E-01	8.4853E-01	7.3348E-01	8.5192E-01
	RESONANCE	1.9124E-01	2.2680E-01	1.8369E-01	2.1856E-01
	THERMAL	1.7080E+00	1.8727E+00	1.4976E+00	1.7895E+00
	1-GROUP	6.0831E-01	7.2327E-01	6.0521E-01	7.1902E-01
SIGMA-P	FAST	2.6022E+00	3.0473E+00	2.6218E+00	3.0593E+00
	RESONANCE	6.1645E-01	7.3108E-01	5.9212E-01	7.0452E-01
	THERMAL	5.5059E+00	6.0367E+00	4.8275E+00	5.7686E+00
	1-GROUP	2.1462E+00	2.5476E+00	2.1377E+00	2.5341E+00

===== TABLE S.B.II.8 CROSS-SECTIONS FOR AM243 =====

BURNUP		0 GWD/T		50 GWD/T	
VM / VF		0.6	1.1	0.6	1.1
SIGMA-A	FAST	1.3992E+00	1.4370E+00	1.4006E+00	1.4379E+00
	RESONANCE	2.4780E+01	2.9800E+01	2.3623E+01	2.8376E+01
	THERMAL	5.8551E+02	5.0628E+02	4.4139E+02	3.8807E+02
	1-GROUP	1.8038E+01	2.9201E+01	1.4677E+01	2.4181E+01
SIGMA-F	FAST	6.0251E-01	7.0627E-01	6.0717E-01	7.0916E-01
	RESONANCE	7.5845E-02	9.1271E-02	7.2142E-02	8.6641E-02
	THERMAL	1.6718E+00	1.4419E+00	1.2702E+00	1.1117E+00
	1-GROUP	4.8701E-01	5.7127E-01	4.8095E-01	5.5773E-01
SIGMA-P	FAST	2.1652E+00	2.5502E+00	2.1819E+00	2.5605E+00
	RESONANCE	2.4343E-01	2.9294E-01	2.3154E-01	2.7808E-01
	THERMAL	5.3657E+00	4.6278E+00	4.0767E+00	3.5682E+00
	1-GROUP	1.7310E+00	2.0299E+00	1.7129E+00	1.9866E+00

===== TABLE S.B.II.9 CROSS-SECTIONS FOR STRUCTURAL MATERIALS AT 0 GWD/T =====

SIGMA-A 3-GROUP

	FAST	RESONANCE	THERMAL	1-GROUP
FE	8.9082E-03	5.1418E-02	4.8008E-01	2.8391E-02
CR	5.6629E-03	7.1040E-02	5.7459E-01	3.2788E-02
NI	5.0133E-02	6.3921E-02	7.8273E-01	6.7020E-02
MN-55	9.8750E-03	1.2236E+00	2.5323E+00	3.6692E-01
ZRY	1.3049E-02	1.0265E-01	5.1741E-02	3.8547E-02

===== TABLE S.B.III.1 REACTION RATES - VOID = 0% FOR U-235 =====

BURNUP		0 GWD/T		50 GWD/T	
VM / VF		0.6	1.1	0.6	1.1
ABSORPT	FAST	1.8750E-03	1.2596E-03	9.6076E-04	6.6592E-04
	RESONANCE	9.9809E-03	8.5409E-03	5.1703E-03	4.6128E-03
	THERMAL	1.4972E-03	3.2794E-03	7.2186E-04	1.8834E-03
	1-GROUP	1.3353E-02	1.3080E-02	6.8529E-03	7.1621E-03
FISSION	FAST	1.5497E-03	1.0511E-03	7.9436E-04	5.5585E-04
	RESONANCE	6.2041E-03	5.2130E-03	3.2134E-03	2.8130E-03
	THERMAL	1.1832E-03	2.6850E-03	5.6998E-04	1.5480E-03
	1-GROUP	8.9369E-03	8.9491E-03	4.5777E-03	4.9168E-03
PRODUCT	FAST	3.9203E-03	2.6795E-03	2.0101E-03	1.4172E-03
	RESONANCE	1.5068E-02	1.2661E-02	7.8046E-03	6.8319E-03
	THERMAL	2.8735E-03	6.5208E-03	1.3843E-03	3.7594E-03
	1-GROUP	2.1862E-02	2.1861E-02	1.1199E-02	1.2008E-02

===== TABLE S.B.III.2 REACTION RATES - VOID = 0% FOR U-238 =====

BURNUP		0 GWD/T		50 GWD/T	
VM / VF		0.6	1.1	0.6	1.1
ABSORPT	FAST	1.0478E-01	7.5952E-02	1.0074E-01	7.3598E-02
	RESONANCE	2.2680E-01	1.9817E-01	2.2313E-01	1.9781E-01
	THERMAL	4.9027E-03	8.2610E-03	4.4169E-03	8.3010E-03
	1-GROUP	3.3648E-01	2.8238E-01	3.2828E-01	2.7971E-01
FISSION	FAST	4.7000E-02	3.8963E-02	4.5479E-02	3.7871E-02
	RESONANCE	1.8592E-05	1.2827E-05	1.7968E-05	1.2519E-05
	THERMAL	0.0000E+00	0.0000E+00	0.0000E+00	0.0000E+00
	1-GROUP	4.7018E-02	3.8976E-02	4.5497E-02	3.7883E-02
PRODUCT	FAST	1.3141E-01	1.0949E-01	1.2713E-01	1.0640E-01
	RESONANCE	4.3127E-05	2.9754E-05	4.1680E-05	2.9041E-05
	THERMAL	0.0000E+00	0.0000E+00	0.0000E+00	0.0000E+00
	1-GROUP	1.3145E-01	1.0952E-01	1.2717E-01	1.0642E-01

===== TABLE S.B.III.3 REACTION RATES - VOID = 0% FOR PU239 =====

BURNUP		0 GWD/T		50 GWD/T	
VM / VF		0.6	1.1	0.6	1.1
ABSORPT	FAST	5.2524E-02	3.1101E-02	4.6837E-02	2.3177E-02
	RESONANCE	2.2604E-01	1.7309E-01	2.0688E-01	1.3760E-01
	THERMAL	9.6715E-02	2.1163E-01	8.4610E-02	1.8226E-01
	1-GROUP	3.7528E-01	4.1581E-01	3.3833E-01	3.4304E-01
FISSION	FAST	4.6750E-02	2.7970E-02	4.1707E-02	2.0849E-02
	RESONANCE	1.2705E-01	9.7305E-02	1.1591E-01	7.6888E-02
	THERMAL	6.3913E-02	1.3808E-01	5.5624E-02	1.1819E-01
	1-GROUP	2.3771E-01	2.6335E-01	2.1324E-01	2.1593E-01
PRODUCT	FAST	1.4200E-01	8.5688E-02	1.2672E-01	6.3885E-02
	RESONANCE	3.6598E-01	2.8030E-01	3.3388E-01	2.2148E-01
	THERMAL	1.8411E-01	3.9776E-01	1.6023E-01	3.4047E-01
	1-GROUP	6.9209E-01	7.6374E-01	6.2083E-01	6.2583E-01

===== TABLE S.B.III.4 REACTION RATES - VOID = 0% FOR PU240 =====

BURNUP		0 GWD/T		50 GWD/T	
VM / VF		0.6	1.1	0.6	1.1
ABSORPT	FAST	1.2140E-02	7.6515E-03	1.2341E-02	6.9554E-03
	RESONANCE	3.7129E-02	2.7296E-02	3.8108E-02	2.6014E-02
	THERMAL	7.5599E-02	1.1677E-01	6.7613E-02	1.0647E-01
	1-GROUP	1.2487E-01	1.5172E-01	1.1806E-01	1.3944E-01
FISSION	FAST	8.8970E-03	5.8810E-03	9.0662E-03	5.3524E-03
	RESONANCE	8.8872E-04	5.6040E-04	9.0566E-04	5.1976E-04
	THERMAL	1.5054E-05	2.3298E-05	1.3489E-05	2.1281E-05
	1-GROUP	9.8006E-03	6.4646E-03	9.9853E-03	5.8933E-03
PRODUCT	FAST	2.7390E-02	1.8230E-02	2.7916E-02	1.6592E-02
	RESONANCE	2.4742E-03	1.5601E-03	2.5213E-03	1.4470E-03
	THERMAL	4.1908E-05	6.4858E-05	3.7552E-05	5.9244E-05
	1-GROUP	2.9906E-02	1.9855E-02	3.0474E-02	1.8098E-02

===== TABLE S.B.III.5 REACTION RATES - VOID = 0% FOR PU241 =====

BURNUP		0 GWD/T		50 GWD/T	
VM / VF		0.6	1.1	0.6	1.1
ABSORPT	FAST	1.0616E-02	6.1496E-03	1.0890E-02	7.6524E-03
	RESONANCE	6.8414E-02	5.5677E-02	6.9778E-02	6.9309E-02
	THERMAL	1.4038E-02	3.0975E-02	1.3856E-02	4.3611E-02
	1-GROUP	9.3068E-02	9.2801E-02	9.4523E-02	1.2057E-01
FISSION	FAST	9.2504E-03	5.3886E-03	9.4915E-03	6.7064E-03
	RESONANCE	5.1726E-02	4.1816E-02	5.2718E-02	5.2071E-02
	THERMAL	1.0718E-02	2.3376E-02	1.0551E-02	3.2800E-02
	1-GROUP	7.1694E-02	7.0580E-02	7.2760E-02	9.1576E-02
PRODUCT	FAST	2.8224E-02	1.6556E-02	2.8967E-02	2.0607E-02
	RESONANCE	1.5168E-01	1.2262E-01	1.5459E-01	1.5269E-01
	THERMAL	3.1428E-02	6.8544E-02	3.0940E-02	9.6178E-02
	1-GROUP	2.1133E-01	2.0772E-01	2.1449E-01	2.6947E-01

===== TABLE S.B.III.6 REACTION RATES - VOID = 0% FOR PU242 =====

BURNUP		0 GWD/T		50 GWD/T	
VM / VF		0.6	1.1	0.6	1.1
ABSORPT	FAST	3.0226E-03	1.9195E-03	2.7640E-03	1.8215E-03
	RESONANCE	6.5528E-03	4.5493E-03	6.0989E-03	4.4248E-03
	THERMAL	1.8159E-02	2.1350E-02	1.7188E-02	2.0913E-02
	1-GROUP	2.7735E-02	2.7819E-02	2.6051E-02	2.7160E-02
FISSION	FAST	2.1467E-03	1.4386E-03	1.9684E-03	1.3670E-03
	RESONANCE	3.5646E-05	2.2561E-05	3.2814E-05	2.1685E-05
	THERMAL	1.3522E-05	1.6538E-05	1.2665E-05	1.6246E-05
	1-GROUP	2.1959E-03	1.4776E-03	2.0139E-03	1.4049E-03
PRODUCT	FAST	6.6619E-03	4.4902E-03	6.1092E-03	4.2667E-03
	RESONANCE	1.0010E-04	6.3353E-05	9.2146E-05	6.0895E-05
	THERMAL	3.7969E-05	4.6439E-05	3.5564E-05	4.5619E-05
	1-GROUP	6.7998E-03	4.6000E-03	6.2367E-03	4.3731E-03

===== TABLE S.B.III.7 REACTION RATES - VOID = 0% FOR AM241 =====

BURNUP		0 GWD/T		50 GWD/T	
VM / VF		0.6	1.1	0.6	1.1
ABSORPT	FAST	0.0000E+00	0.0000E+00	1.0312E-03	6.4161E-04
	RESONANCE	0.0000E+00	0.0000E+00	4.9625E-03	3.9780E-03
	THERMAL	0.0000E+00	0.0000E+00	4.2836E-03	7.3428E-03
	1-GROUP	0.0000E+00	0.0000E+00	1.0277E-02	1.1952E-02
FISSION	FAST	0.0000E+00	0.0000E+00	4.3148E-04	3.0504E-04
	RESONANCE	0.0000E+00	0.0000E+00	3.8300E-05	3.0493E-05
	THERMAL	0.0000E+00	0.0000E+00	2.0864E-05	3.7170E-05
	1-GROUP	0.0000E+00	0.0000E+00	4.9064E-04	3.7270E-04
PRODUCT	FAST	0.0000E+00	0.0000E+00	1.5423E-03	1.0955E-03
	RESONANCE	0.0000E+00	0.0000E+00	1.2346E-04	9.8292E-05
	THERMAL	0.0000E+00	0.0000E+00	6.7255E-05	1.1982E-04
	1-GROUP	0.0000E+00	0.0000E+00	1.7330E-03	1.3136E-03

===== TABLE S.B.III.8 REACTION RATES - VOID = 0% FOR AM243 =====

BURNUP		0 GWD/T		50 GWD/T	
VM / VF		0.6	1.1	0.6	1.1
ABSORPT	FAST	0.0000E+00	0.0000E+00	1.1982E-03	8.2367E-04
	RESONANCE	0.0000E+00	0.0000E+00	7.1627E-03	6.3332E-03
	THERMAL	0.0000E+00	0.0000E+00	8.9425E-03	1.2895E-02
	1-GROUP	0.0000E+00	0.0000E+00	1.7303E-02	2.0052E-02
FISSION	FAST	0.0000E+00	0.0000E+00	5.1941E-04	4.0622E-04
	RESONANCE	0.0000E+00	0.0000E+00	2.1874E-05	1.9337E-05
	THERMAL	0.0000E+00	0.0000E+00	2.5734E-05	3.6941E-05
	1-GROUP	0.0000E+00	0.0000E+00	5.6701E-04	4.6249E-04
PRODUCT	FAST	0.0000E+00	0.0000E+00	1.8666E-03	1.4667E-03
	RESONANCE	0.0000E+00	0.0000E+00	7.0206E-05	6.2064E-05
	THERMAL	0.0000E+00	0.0000E+00	8.2593E-05	1.1856E-04
	1-GROUP	0.0000E+00	0.0000E+00	2.0194E-03	1.6473E-03

===== TABLE S.B.III.9 REACTION RATES - VOID = 0% FOR TOTAL FISSION PRODUCTS =====

BURNUP		0 GWD/T		50 GWD/T	
VM / VF		0.6	1.1	0.6	1.1
ABSORPT	FAST	0.0000E+00	0.0000E+00	1.0142E-03	5.9386E-04
	RESONANCE	0.0000E+00	0.0000E+00	1.9723E-02	1.8151E-02
	THERMAL	0.0000E+00	0.0000E+00	1.0359E-02	1.5432E-02
	1-GROUP	0.0000E+00	0.0000E+00	3.1096E-02	3.4176E-02

===== TABLE S.IV ABSORPTION RATES - VOID = 0% =====

BURNUP		0 GWD/T		50 GWD/T	
VM / VF		0.6	1.1	0.6	1.1
TC-99	FAST	0.0000E+00	0.0000E+00	2.9801E-04	1.8503E-04
	RESONANCE	0.0000E+00	0.0000E+00	4.8088E-03	4.8736E-03
	THERMAL	0.0000E+00	0.0000E+00	1.4739E-04	2.3819E-04
	1-GROUP	0.0000E+00	0.0000E+00	5.2541E-03	5.2968E-03
RH103	FAST	0.0000E+00	0.0000E+00	3.9332E-04	2.2875E-04
	RESONANCE	0.0000E+00	0.0000E+00	1.4718E-03	9.8236E-04
	THERMAL	0.0000E+00	0.0000E+00	5.0287E-03	7.8777E-03
	1-GROUP	0.0000E+00	0.0000E+00	6.8938E-03	9.0888E-03
XE131	FAST	0.0000E+00	0.0000E+00	6.3303E-05	3.8270E-05
	RESONANCE	0.0000E+00	0.0000E+00	4.9716E-03	4.8522E-03
	THERMAL	0.0000E+00	0.0000E+00	1.6417E-04	3.1056E-04
	1-GROUP	0.0000E+00	0.0000E+00	5.1990E-03	5.2110E-03
CS133	FAST	0.0000E+00	0.0000E+00	2.1117E-04	1.3088E-04
	RESONANCE	0.0000E+00	0.0000E+00	6.8568E-03	6.8992E-03
	THERMAL	0.0000E+00	0.0000E+00	1.7647E-04	3.1177E-04
	1-GROUP	0.0000E+00	0.0000E+00	7.2443E-03	7.3418E-03
SM149	FAST	0.0000E+00	0.0000E+00	4.8438E-05	1.0927E-05
	RESONANCE	0.0000E+00	0.0000E+00	1.6142E-03	5.3333E-04
	THERMAL	0.0000E+00	0.0000E+00	4.8421E-03	6.6934E-03
	1-GROUP	0.0000E+00	0.0000E+00	6.5047E-03	7.2377E-03

===== TABLE S.B.V.1 REACTION RATES - VOID = 45% FOR U-235 =====

BURNUP		0 GWD/T		50 GWD/T	
VM / VF		0.6	1.1	0.6	1.1
ABSORPT	FAST	2.7502E-03	1.9369E-03	1.4133E-03	1.0280E-03
	RESONANCE	1.0879E-02	1.0912E-02	5.6849E-03	5.9750E-03
	THERMAL	7.4808E-04	1.9215E-03	3.5875E-04	1.0780E-03
	1-GROUP	1.4377E-02	1.4770E-02	7.4568E-03	8.0810E-03
FISSION	FAST	2.2515E-03	1.6014E-03	1.1574E-03	8.5010E-04
	RESONANCE	6.9044E-03	6.7629E-03	3.6075E-03	3.6992E-03
	THERMAL	5.6910E-04	1.5299E-03	2.7252E-04	8.6333E-04
	1-GROUP	9.7250E-03	9.8941E-03	5.0373E-03	5.4125E-03
PRODUCT	FAST	5.6597E-03	4.0546E-03	2.9101E-03	2.1527E-03
	RESONANCE	1.6770E-02	1.6426E-02	8.7619E-03	8.9844E-03
	THERMAL	1.3821E-03	3.7156E-03	6.6185E-04	2.0967E-03
	1-GROUP	2.3811E-02	2.4196E-02	1.2334E-02	1.3234E-02

===== TABLE S.B.V.2 REACTION RATES - VOID = 45% FOR U-238 =====

BURNUP		0 GWD/T		50 GWD/T	
VM / VF		0.6	1.1	0.6	1.1
ABSORPT	FAST	1.4355E-01	1.0891E-01	1.3839E-01	1.0597E-01
	RESONANCE	2.4401E-01	2.3534E-01	2.4148E-01	2.3721E-01
	THERMAL	2.9447E-03	6.0246E-03	2.6382E-03	5.9039E-03
	1-GROUP	3.9049E-01	3.5027E-01	3.8251E-01	3.4908E-01
FISSION	FAST	5.5150E-02	4.9391E-02	5.3574E-02	4.8248E-02
	RESONANCE	2.5352E-05	1.9321E-05	2.4683E-05	1.9021E-05
	THERMAL	0.0000E+00	0.0000E+00	0.0000E+00	0.0000E+00
	1-GROUP	5.5176E-02	4.9410E-02	5.3599E-02	4.8266E-02
PRODUCT	FAST	1.5384E-01	1.3847E-01	1.4941E-01	1.3522E-01
	RESONANCE	5.8810E-05	4.4820E-05	5.7257E-05	4.4125E-05
	THERMAL	0.0000E+00	0.0000E+00	0.0000E+00	0.0000E+00
	1-GROUP	1.5390E-01	1.3851E-01	1.4947E-01	1.3527E-01

===== TABLE S.B.V.3 REACTION RATES - VOID = 45% FOR PU239 =====

BURNUP		0 GWD/T		50 GWD/T	
VM / VF		0.6	1.1	0.6	1.1
ABSORPT	FAST	7.5125E-02	4.6705E-02	6.7179E-02	3.4942E-02
	RESONANCE	2.4170E-01	2.1322E-01	2.2291E-01	1.7199E-01
	THERMAL	3.9148E-02	1.1107E-01	3.4048E-02	9.5353E-02
	1-GROUP	3.5597E-01	3.7099E-01	3.2413E-01	3.0229E-01
FISSION	FAST	6.6139E-02	4.1576E-02	5.9169E-02	3.1113E-02
	RESONANCE	1.3555E-01	1.1995E-01	1.2463E-01	9.6124E-02
	THERMAL	2.6406E-02	7.3142E-02	2.2822E-02	6.2257E-02
	1-GROUP	2.2809E-01	2.3466E-01	2.0662E-01	1.8949E-01
PRODUCT	FAST	1.9939E-01	1.2641E-01	1.7844E-01	9.4613E-02
	RESONANCE	3.9047E-01	3.4552E-01	3.5902E-01	2.7690E-01
	THERMAL	7.6064E-02	2.1069E-01	6.5741E-02	1.7934E-01
	1-GROUP	6.6592E-01	6.8262E-01	6.0320E-01	5.5084E-01

===== TABLE S.B.V.4 REACTION RATES - VOID = 45% FOR PU240 =====

BURNUP		0 GWD/T		50 GWD/T	
VM / VF		0.6	1.1	0.6	1.1
ABSORPT	FAST	1.6243E-02	1.0820E-02	1.6561E-02	9.8775E-03
	RESONANCE	4.1284E-02	3.4676E-02	4.2727E-02	3.3502E-02
	THERMAL	3.9253E-02	8.2914E-02	3.4207E-02	7.4032E-02
	1-GROUP	9.6779E-02	1.2841E-01	9.3495E-02	1.1741E-01
FISSION	FAST	1.1227E-02	7.9409E-03	1.1480E-02	7.2601E-03
	RESONANCE	1.1624E-03	8.0923E-04	1.1926E-03	7.5711E-04
	THERMAL	7.8317E-06	1.6503E-05	6.8431E-06	1.4756E-05
	1-GROUP	1.2397E-02	8.7665E-03	1.2679E-02	8.0318E-03
PRODUCT	FAST	3.4375E-02	2.4488E-02	3.5155E-02	2.2389E-02
	RESONANCE	3.2361E-03	2.2529E-03	3.3203E-03	2.1078E-03
	THERMAL	2.1802E-05	4.5940E-05	1.9050E-05	4.1078E-05
	1-GROUP	3.7633E-02	2.6787E-02	3.8495E-02	2.4538E-02

===== TABLE S.B.V.5 REACTION RATES - VOID = 45% FOR PU241 =====

BURNUP		0 GWD/T		50 GWD/T	
VM / VF		0.6	1.1	0.6	1.1
ABSORPT	FAST	1.5526E-02	9.4337E-03	1.5973E-02	1.1785E-02
	RESONANCE	6.7697E-02	6.5348E-02	6.9614E-02	8.2150E-02
	THERMAL	6.0372E-03	1.5969E-02	5.9266E-03	2.2193E-02
	1-GROUP	8.9259E-02	9.0750E-02	9.1512E-02	1.1613E-01
FISSION	FAST	1.3460E-02	8.2224E-03	1.3850E-02	1.0273E-02
	RESONANCE	5.1542E-02	4.9332E-02	5.2980E-02	6.2049E-02
	THERMAL	4.6932E-03	1.2153E-02	4.5935E-03	1.6798E-02
	1-GROUP	6.9696E-02	6.9707E-02	7.1424E-02	8.9119E-02
PRODUCT	FAST	4.0825E-02	2.5105E-02	4.2018E-02	3.1370E-02
	RESONANCE	1.5114E-01	1.4466E-01	1.5536E-01	1.8195E-01
	THERMAL	1.3762E-02	3.5637E-02	1.3469E-02	4.9258E-02
	1-GROUP	2.0572E-01	2.0540E-01	2.1084E-01	2.6257E-01

===== TABLE S.B.V.6 REACTION RATES - VOID = 45% FOR PU242 =====

BURNUP		0 GWD/T		50 GWD/T	
VM / VF		0.6	1.1	0.6	1.1
ABSORPT	FAST	4.0114E-03	2.6957E-03	3.6794E-03	2.5692E-03
	RESONANCE	7.6599E-03	6.0832E-03	7.1863E-03	5.9965E-03
	THERMAL	1.1928E-02	1.8629E-02	1.1312E-02	1.8348E-02
	1-GROUP	2.3599E-02	2.7408E-02	2.2178E-02	2.6914E-02
FISSION	FAST	2.6642E-03	1.9177E-03	2.4517E-03	1.8307E-03
	RESONANCE	4.6139E-05	3.2563E-05	4.2776E-05	3.1617E-05
	THERMAL	8.7321E-06	1.3948E-05	8.2011E-06	1.3720E-05
	1-GROUP	2.7191E-03	1.9642E-03	2.5027E-03	1.8761E-03
PRODUCT	FAST	8.2332E-03	5.9610E-03	7.5773E-03	5.6909E-03
	RESONANCE	1.2956E-04	9.1441E-05	1.2012E-04	8.8784E-05
	THERMAL	2.4519E-05	3.9165E-05	2.3028E-05	3.8524E-05
	1-GROUP	8.3871E-03	6.0914E-03	7.7203E-03	5.8180E-03

===== TABLE S.B.V.7 REACTION RATES - VOID = 45% FOR AM241 =====

BURNUP		0 GWD/T		50 GWD/T	
VM / VF		0.6	1.1	0.6	1.1
ABSORPT	FAST	0.0000E+00	0.0000E+00	1.4644E-03	9.5564E-04
	RESONANCE	0.0000E+00	0.0000E+00	5.3040E-03	4.9746E-03
	THERMAL	0.0000E+00	0.0000E+00	2.3194E-03	5.1992E-03
	1-GROUP	0.0000E+00	0.0000E+00	9.0877E-03	1.1129E-02
FISSION	FAST	0.0000E+00	0.0000E+00	5.2625E-04	4.0104E-04
	RESONANCE	0.0000E+00	0.0000E+00	4.1565E-05	3.8138E-05
	THERMAL	0.0000E+00	0.0000E+00	1.0977E-05	2.5564E-05
	1-GROUP	0.0000E+00	0.0000E+00	5.7878E-04	4.6474E-04
PRODUCT	FAST	0.0000E+00	0.0000E+00	1.8751E-03	1.4358E-03
	RESONANCE	0.0000E+00	0.0000E+00	1.3398E-04	1.2293E-04
	THERMAL	0.0000E+00	0.0000E+00	3.5385E-05	8.2406E-05
	1-GROUP	0.0000E+00	0.0000E+00	2.0445E-03	1.6411E-03

===== TABLE S.B.V.8 REACTION RATES - VOID = 45% FOR AM243 =====

BURNUP		0 GWD/T		50 GWD/T	
VM / VF		0.6	1.1	0.6	1.1
ABSORPT	FAST	0.0000E+00	0.0000E+00	1.6967E-03	1.2222E-03
	RESONANCE	0.0000E+00	0.0000E+00	7.6297E-03	7.9341E-03
	THERMAL	0.0000E+00	0.0000E+00	5.4767E-03	1.0875E-02
	1-GROUP	0.0000E+00	0.0000E+00	1.4803E-02	2.0032E-02
FISSION	FAST	0.0000E+00	0.0000E+00	6.2954E-04	5.3142E-04
	RESONANCE	0.0000E+00	0.0000E+00	2.3304E-05	2.4225E-05
	THERMAL	0.0000E+00	0.0000E+00	1.5834E-05	3.1269E-05
	1-GROUP	0.0000E+00	0.0000E+00	6.6867E-04	5.8691E-04
PRODUCT	FAST	0.0000E+00	0.0000E+00	2.2556E-03	1.9131E-03
	RESONANCE	0.0000E+00	0.0000E+00	7.4795E-05	7.7751E-05
	THERMAL	0.0000E+00	0.0000E+00	5.0819E-05	1.0036E-04
	1-GROUP	0.0000E+00	0.0000E+00	2.3812E-03	2.0912E-03

===== TABLE S.B.V.9 REACTION RATES - VOID = 45% FOR TOTAL FISSION PRODUCTS =====

BURNUP		0 GWD/T		50 GWD/T	
VM / VF		0.6	1.1	0.6	1.1
ABSORPT	FAST	0.0000E+00	0.0000E+00	1.5812E-03	9.7441E-04
	RESONANCE	0.0000E+00	0.0000E+00	1.8648E-02	2.0601E-02
	THERMAL	0.0000E+00	0.0000E+00	4.7180E-03	9.5776E-03
	1-GROUP	0.0000E+00	0.0000E+00	2.4947E-02	3.1153E-02
FISSION	FAST	0.0000E+00	0.0000E+00	0.0000E+00	0.0000E+00
	RESONANCE	0.0000E+00	0.0000E+00	0.0000E+00	0.0000E+00
	THERMAL	0.0000E+00	0.0000E+00	0.0000E+00	0.0000E+00
	1-GROUP	0.0000E+00	0.0000E+00	0.0000E+00	0.0000E+00
PRODUCT	FAST	0.0000E+00	0.0000E+00	0.0000E+00	0.0000E+00
	RESONANCE	0.0000E+00	0.0000E+00	0.0000E+00	0.0000E+00
	THERMAL	0.0000E+00	0.0000E+00	0.0000E+00	0.0000E+00
	1-GROUP	0.0000E+00	0.0000E+00	0.0000E+00	0.0000E+00

===== TABLE S.B.VI.1 REACTION RATES - VOID = 90% FOR U-235 =====

BURNUP		0 GWD/T		50 GWD/T	
VM / VF		0.6	1.1	0.6	1.1
ABSORPT	FAST	6.0319E-03	5.1599E-03	3.1306E-03	2.7798E-03
	RESONANCE	7.6023E-03	1.0584E-02	4.0875E-03	6.0997E-03
	THERMAL	4.3591E-05	1.8892E-04	2.1094E-05	1.0182E-04
	1-GROUP	1.3678E-02	1.5932E-02	7.2391E-03	8.9812E-03
FISSION	FAST	4.8309E-03	4.1543E-03	2.5072E-03	2.2375E-03
	RESONANCE	5.1617E-03	6.9967E-03	2.7734E-03	4.0248E-03
	THERMAL	3.0253E-05	1.3527E-04	1.4609E-05	7.3333E-05
	1-GROUP	1.0023E-02	1.1286E-02	5.2951E-03	6.3356E-03
PRODUCT	FAST	1.1999E-02	1.0351E-02	6.2274E-03	5.5749E-03
	RESONANCE	1.2538E-02	1.6995E-02	6.7368E-03	9.7760E-03
	THERMAL	7.3472E-05	3.2850E-04	3.5479E-05	1.7810E-04
	1-GROUP	2.4610E-02	2.7674E-02	1.3000E-02	1.5529E-02

===== TABLE S.B.VI.2 REACTION RATES - VOID = 90% FOR U-238 =====

BURNUP		0 GWD/T		50 GWD/T	
VM / VF		0.6	1.1	0.6	1.1
ABSORPT	FAST	2.7851E-01	2.4534E-01	2.7086E-01	2.4204E-01
	RESONANCE	2.0776E-01	2.3884E-01	2.0987E-01	2.4967E-01
	THERMAL	2.2258E-04	9.0015E-04	2.0099E-04	8.6583E-04
	1-GROUP	4.8649E-01	4.8508E-01	4.8093E-01	4.9257E-01
FISSION	FAST	6.7282E-02	6.8655E-02	6.5745E-02	6.7702E-02
	RESONANCE	3.1824E-05	3.5632E-05	3.1952E-05	3.6700E-05
	THERMAL	0.0000E+00	0.0000E+00	0.0000E+00	0.0000E+00
	1-GROUP	6.7314E-02	6.8691E-02	6.5776E-02	6.7738E-02
PRODUCT	FAST	1.8705E-01	1.9163E-01	1.8271E-01	1.8889E-01
	RESONANCE	7.3825E-05	8.2659E-05	7.4122E-05	8.5135E-05
	THERMAL	0.0000E+00	0.0000E+00	0.0000E+00	0.0000E+00
	1-GROUP	1.8712E-01	1.9172E-01	1.8279E-01	1.8898E-01

===== TABLE S.B.VI.3 REACTION RATES - VOID = 90% FOR PU239 =====

BURNUP		0 GWD/T		50 GWD/T	
VM / VF		0.6	1.1	0.6	1.1
ABSORPT	FAST	1.5484E-01	1.1573E-01	1.3970E-01	8.7776E-02
	RESONANCE	1.6383E-01	1.9602E-01	1.5448E-01	1.6429E-01
	THERMAL	1.1012E-03	5.5159E-03	9.5818E-04	4.6810E-03
	1-GROUP	3.1977E-01	3.1727E-01	2.9514E-01	2.5675E-01
FISSION	FAST	1.3267E-01	9.9788E-02	1.1968E-01	7.5655E-02
	RESONANCE	9.0803E-02	1.0948E-01	8.5510E-02	9.1343E-02
	THERMAL	8.1807E-04	3.9205E-03	7.0509E-04	3.2667E-03
	1-GROUP	2.2429E-01	2.1319E-01	2.0590E-01	1.7026E-01
PRODUCT	FAST	3.9402E-01	2.9760E-01	3.5550E-01	2.2563E-01
	RESONANCE	2.6158E-01	3.1538E-01	2.4633E-01	2.6313E-01
	THERMAL	2.3565E-03	1.1293E-02	2.0311E-03	9.4100E-03
	1-GROUP	6.5795E-01	6.2427E-01	6.0386E-01	4.9816E-01

===== TABLE S.B.VI.4 REACTION RATES - VOID = 90% FOR PU240 =====

BURNUP		0 GWD/T		50 GWD/T	
VM / VF		0.6	1.1	0.6	1.1
ABSORPT	FAST	2.8616E-02	2.2285E-02	2.9400E-02	2.0596E-02
	RESONANCE	2.9880E-02	3.5024E-02	3.1770E-02	3.5372E-02
	THERMAL	1.6317E-03	7.2511E-03	1.3659E-03	6.2536E-03
	1-GROUP	6.0127E-02	5.4560E-02	6.2535E-02	6.2221E-02
FISSION	FAST	1.6348E-02	1.3469E-02	1.6819E-02	1.2438E-02
	RESONANCE	1.4157E-03	1.3577E-03	1.4919E-03	1.3193E-03
	THERMAL	3.3173E-07	1.4608E-06	2.7955E-07	1.2624E-06
	1-GROUP	1.7764E-02	1.4828E-02	1.8311E-02	1.3758E-02
PRODUCT	FAST	4.9465E-02	4.0945E-02	5.0893E-02	3.7811E-02
	RESONANCE	3.9413E-03	3.7798E-03	4.1536E-03	3.6729E-03
	THERMAL	9.2347E-07	4.0665E-06	7.7821E-07	3.5144E-06
	1-GROUP	5.3407E-02	4.4729E-02	5.5047E-02	4.1487E-02

===== TABLE S.B.VI.5 REACTION RATES - VOID = 90% FOR PU241 =====

BURNUP		0 GWD/T		50 GWD/T	
VM / VF		0.6	1.1	0.6	1.1
ABSORPT	FAST	3.3743E-02	2.4892E-02	3.5054E-02	3.1555E-02
	RESONANCE	3.9057E-02	4.9267E-02	4.1758E-02	6.5573E-02
	THERMAL	2.6916E-04	1.0830E-03	2.6463E-04	1.4289E-03
	1-GROUP	7.3069E-02	7.5242E-02	7.7076E-02	9.8556E-02
FISSION	FAST	2.8956E-02	2.1411E-02	3.0081E-02	2.7139E-02
	RESONANCE	3.0369E-02	3.8005E-02	3.2469E-02	5.0614E-02
	THERMAL	2.2121E-04	8.7283E-04	2.1687E-04	1.1415E-03
	1-GROUP	5.9547E-02	6.0289E-02	6.2766E-02	7.8893E-02
PRODUCT	FAST	8.6824E-02	6.4390E-02	9.0201E-02	8.1615E-02
	RESONANCE	8.9058E-02	1.1145E-01	9.5213E-02	1.4842E-01
	THERMAL	6.4867E-04	2.5594E-03	6.3592E-04	3.3473E-03
	1-GROUP	1.7653E-01	1.7839E-01	1.8605E-01	2.3338E-01

===== TABLE S.B.VI.6 REACTION RATES - VOID = 90% FOR PU242 =====

BURNUP		0 GWD/T		50 GWD/T	
VM / VF		0.6	1.1	0.6	1.1
ABSORPT	FAST	6.9450E-03	5.4375E-03	6.4192E-03	5.2470E-03
	RESONANCE	6.4064E-03	7.1558E-03	6.1438E-03	7.3967E-03
	THERMAL	9.7211E-04	3.1449E-03	9.3615E-04	3.1985E-03
	1-GROUP	1.4323E-02	1.5738E-02	1.3499E-02	1.5842E-02
FISSION	FAST	3.6787E-03	3.0821E-03	3.4056E-03	2.9711E-03
	RESONANCE	5.2355E-05	5.2494E-05	4.9880E-05	5.3259E-05
	THERMAL	6.9814E-07	2.2805E-06	6.6674E-07	2.3061E-06
	1-GROUP	3.7318E-03	3.1369E-03	3.4562E-03	3.0267E-03
PRODUCT	FAST	1.1274E-02	9.4818E-03	1.0438E-02	9.1399E-03
	RESONANCE	1.4702E-04	1.4741E-04	1.4007E-04	1.4956E-04
	THERMAL	1.9603E-06	6.4036E-06	1.8722E-06	6.4755E-06
	1-GROUP	1.1423E-02	9.6354E-03	1.0580E-02	9.2958E-03

===== TABLE S.8.VI.7 REACTION RATES - VOID = 90% FOR AM241 =====

BURNUP		0 GWD/T		50 GWD/T	
VM / VF		0.6	1.1	0.6	1.1
ABSORPT	FAST	0.0000E+00	0.0000E+00	3.0457E-03	2.3723E-03
	RESONANCE	0.0000E+00	0.0000E+00	3.7733E-03	4.8178E-03
	THERMAL	0.0000E+00	0.0000E+00	1.2480E-04	5.5756E-04
	1-GROUP	0.0000E+00	0.0000E+00	6.9437E-03	7.7475E-03
FISSION	FAST	0.0000E+00	0.0000E+00	6.9741E-04	6.1552E-04
	RESONANCE	0.0000E+00	0.0000E+00	3.2932E-05	4.0022E-05
	THERMAL	0.0000E+00	0.0000E+00	5.4244E-07	2.4908E-06
	1-GROUP	0.0000E+00	0.0000E+00	7.3087E-04	6.5802E-04
PRODUCT	FAST	0.0000E+00	0.0000E+00	2.4694E-03	2.1867E-03
	RESONANCE	0.0000E+00	0.0000E+00	1.0616E-04	1.2901E-04
	THERMAL	0.0000E+00	0.0000E+00	1.7485E-06	8.0291E-06
	1-GROUP	0.0000E+00	0.0000E+00	2.5773E-03	2.3237E-03

===== TABLE S.8.VI.8 REACTION RATES - VOID = 90% FOR AM243 =====

BURNUP		0 GWD/T		50 GWD/T	
VM / VF		0.6	1.1	0.6	1.1
ABSORPT	FAST	0.0000E+00	0.0000E+00	3.5405E-03	3.0289E-03
	RESONANCE	0.0000E+00	0.0000E+00	5.2119E-03	7.4840E-03
	THERMAL	0.0000E+00	0.0000E+00	3.5011E-04	1.5488E-03
	1-GROUP	0.0000E+00	0.0000E+00	9.1023E-03	1.2062E-02
FISSION	FAST	0.0000E+00	0.0000E+00	8.1931E-04	8.0024E-04
	RESONANCE	0.0000E+00	0.0000E+00	1.5921E-05	2.2860E-05
	THERMAL	0.0000E+00	0.0000E+00	1.0270E-06	4.5200E-06
	1-GROUP	0.0000E+00	0.0000E+00	8.3625E-04	8.2761E-04
PRODUCT	FAST	0.0000E+00	0.0000E+00	2.9194E-03	2.8609E-03
	RESONANCE	0.0000E+00	0.0000E+00	5.1102E-05	7.3373E-05
	THERMAL	0.0000E+00	0.0000E+00	3.2960E-06	1.4507E-05
	1-GROUP	0.0000E+00	0.0000E+00	2.9738E-03	2.9488E-03

===== TABLE S.8.VI.9 REACTION RATES - VOID = 90% FOR TOTAL FISSION PRODUCTS =====

BURNUP		0 GWD/T		50 GWD/T	
VM / VF		0.6	1.1	0.6	1.1
ABSORPT	FAST	0.0000E+00	0.0000E+00	3.9582E-03	3.0813E-03
	RESONANCE	0.0000E+00	0.0000E+00	9.6241E-03	1.3874E-02
	THERMAL	0.0000E+00	0.0000E+00	1.9373E-04	8.5709E-04
	1-GROUP	0.0000E+00	0.0000E+00	1.3776E-02	1.7812E-02
FISSION	FAST	0.0000E+00	0.0000E+00	0.0000E+00	0.0000E+00
	RESONANCE	0.0000E+00	0.0000E+00	0.0000E+00	0.0000E+00
	THERMAL	0.0000E+00	0.0000E+00	0.0000E+00	0.0000E+00
	1-GROUP	0.0000E+00	0.0000E+00	0.0000E+00	0.0000E+00
PRODUCT	FAST	0.0000E+00	0.0000E+00	0.0000E+00	0.0000E+00
	RESONANCE	0.0000E+00	0.0000E+00	0.0000E+00	0.0000E+00
	THERMAL	0.0000E+00	0.0000E+00	0.0000E+00	0.0000E+00
	1-GROUP	0.0000E+00	0.0000E+00	0.0000E+00	0.0000E+00

===== TABLE S.8.VII.1 REACTION RATES - VOID = 99% FOR U-235 =====

BURNUP		0 GWD/T		50 GWD/T	
VM / VF		0.6	1.1	0.6	1.1
ABSORPT	FAST	8.5354E-03	9.0177E-03	4.4661E-03	4.9459E-03
	RESONANCE	4.1112E-03	4.7487E-03	2.2553E-03	2.8452E-03
	THERMAL	5.4815E-07	1.9236E-06	2.7201E-07	1.0675E-06
	1-GROUP	1.2647E-02	1.3768E-02	6.7215E-03	7.7920E-03
FISSION	FAST	6.7637E-03	7.1361E-03	3.5377E-03	3.9102E-03
	RESONANCE	2.9101E-03	3.3462E-03	1.5954E-03	2.0018E-03
	THERMAL	3.6488E-07	1.2887E-06	1.8065E-07	7.1567E-07
	1-GROUP	9.6741E-03	1.0483E-02	5.1333E-03	5.9126E-03
PRODUCT	FAST	1.6726E-02	1.7649E-02	8.7477E-03	9.6680E-03
	RESONANCE	7.0695E-03	8.1289E-03	3.8758E-03	4.8630E-03
	THERMAL	8.8614E-07	3.1296E-06	4.3874E-07	1.7381E-06
	1-GROUP	2.3796E-02	2.5781E-02	1.2624E-02	1.4533E-02

===== TABLE S.8.VII.2 REACTION RATES - VOID = 99% FOR U-238 =====

BURNUP		0 GWD/T		50 GWD/T	
VM / VF		0.6	1.1	0.6	1.1
ABSORPT	FAST	3.8184E-01	4.0416E-01	3.7426E-01	4.0582E-01
	RESONANCE	1.4352E-01	1.5211E-01	1.4741E-01	1.6472E-01
	THERMAL	2.9798E-06	1.0368E-05	2.7655E-06	1.0465E-05
	1-GROUP	5.2536E-01	5.5628E-01	5.2168E-01	5.7055E-01
FISSION	FAST	7.0495E-02	7.4768E-02	6.8994E-02	7.3955E-02
	RESONANCE	1.9783E-05	2.2702E-05	2.0466E-05	2.4937E-05
	THERMAL	0.0000E+00	0.0000E+00	0.0000E+00	0.0000E+00
	1-GROUP	7.0515E-02	7.4791E-02	6.9014E-02	7.3980E-02
PRODUCT	FAST	1.9580E-01	2.0839E-01	1.9156E-01	2.0603E-01
	RESONANCE	4.5896E-05	5.2668E-05	4.7480E-05	5.7852E-05
	THERMAL	0.0000E+00	0.0000E+00	0.0000E+00	0.0000E+00
	1-GROUP	1.9585E-01	2.0844E-01	1.9161E-01	2.0609E-01

===== TABLE S.8.VII.3 REACTION RATES - VOID = 99% FOR PU239 =====

BURNUP		0 GWD/T		50 GWD/T	
VM / VF		0.6	1.1	0.6	1.1
ABSORPT	FAST	2.1232E-01	1.9234E-01	1.9293E-01	1.4821E-01
	RESONANCE	8.4182E-02	8.4081E-02	8.0599E-02	7.1829E-02
	THERMAL	7.7754E-06	2.6621E-05	6.7846E-06	2.2330E-05
	1-GROUP	2.9651E-01	2.7644E-01	2.7353E-01	2.2006E-01
FISSION	FAST	1.7937E-01	1.6207E-01	1.6288E-01	1.2468E-01
	RESONANCE	4.6516E-02	4.6647E-02	4.4505E-02	3.9779E-02
	THERMAL	6.4473E-06	2.1490E-05	5.5910E-06	1.7696E-05
	1-GROUP	2.2589E-01	2.0873E-01	2.0739E-01	1.6448E-01
PRODUCT	FAST	5.2970E-01	4.7879E-01	4.8099E-01	3.6818E-01
	RESONANCE	1.3401E-01	1.3438E-01	1.2821E-01	1.1460E-01
	THERMAL	1.8572E-05	6.1904E-05	1.6106E-05	5.0974E-05
	1-GROUP	6.6372E-01	6.1314E-01	6.0922E-01	4.8283E-01

===== TABLE S.B.VII.4 REACTION RATES - VOID = 99% FOR PU240 =====

BURNUP		0 GWD/T		50 GWD/T	
VM / VF		0.6	1.1	0.6	1.1
ABSORPT	FAST	3.6847E-02	3.3413E-02	3.8086E-02	3.1315E-02
	RESONANCE	1.5266E-02	1.5231E-02	1.6558E-02	1.5799E-02
	THERMAL	1.1980E-05	4.0825E-05	9.9817E-06	3.6102E-05
	1-GROUP	5.2125E-02	4.8685E-02	5.4655E-02	4.7150E-02
FISSION	FAST	1.8621E-02	1.6720E-02	1.9208E-02	1.5535E-02
	RESONANCE	9.9952E-04	9.2625E-04	1.0816E-03	9.4884E-04
	THERMAL	2.5204E-09	8.5137E-09	2.1296E-09	7.5685E-09
	1-GROUP	1.9620E-02	1.7646E-02	2.0290E-02	1.6483E-02
PRODUCT	FAST	5.6047E-02	5.0400E-02	5.7816E-02	4.6816E-02
	RESONANCE	2.7828E-03	2.5788E-03	3.0113E-03	2.6417E-03
	THERMAL	7.0163E-09	2.3701E-08	5.9284E-09	2.1069E-08
	1-GROUP	5.8830E-02	5.2979E-02	6.0827E-02	4.9458E-02

===== TABLE S.B.VII.5 REACTION RATES - VOID = 99% FOR PU241 =====

BURNUP		0 GWD/T		50 GWD/T	
VM / VF		0.6	1.1	0.6	1.1
ABSORPT	FAST	4.7471E-02	4.3114E-02	4.9706E-02	5.5614E-02
	RESONANCE	2.0634E-02	2.0565E-02	2.2631E-02	2.8898E-02
	THERMAL	3.1552E-06	9.6018E-06	3.1550E-06	1.2663E-05
	1-GROUP	6.8108E-02	6.3688E-02	7.2341E-02	8.4524E-02
FISSION	FAST	4.0557E-02	3.6812E-02	4.2460E-02	4.7466E-02
	RESONANCE	1.6263E-02	1.6187E-02	1.7831E-02	2.2733E-02
	THERMAL	2.6531E-06	8.0476E-06	2.6502E-06	1.0581E-05
	1-GROUP	5.6823E-02	5.3007E-02	6.0294E-02	7.0210E-02
PRODUCT	FAST	1.2109E-01	1.0991E-01	1.2677E-01	1.4169E-01
	RESONANCE	4.7695E-02	4.7472E-02	5.2293E-02	6.6668E-02
	THERMAL	7.7797E-06	2.3598E-05	7.7712E-06	3.1027E-05
	1-GROUP	1.6879E-01	1.5740E-01	1.7907E-01	2.0839E-01

===== TABLE S.B.VII.6 REACTION RATES - VOID = 99% FOR PU242 =====

BURNUP		0 GWD/T		50 GWD/T	
VM / VF		0.6	1.1	0.6	1.1
ABSORPT	FAST	8.9089E-03	8.0994E-03	8.2858E-03	7.9295E-03
	RESONANCE	3.7377E-03	3.6781E-03	3.6410E-03	3.9365E-03
	THERMAL	1.3493E-05	3.6808E-05	1.3298E-05	3.9725E-05
	1-GROUP	1.2660E-02	1.1814E-02	1.1940E-02	1.1906E-02
FISSION	FAST	4.0520E-03	3.6365E-03	3.7588E-03	3.5207E-03
	RESONANCE	3.2995E-05	3.1769E-05	3.2303E-05	3.4176E-05
	THERMAL	9.6047E-09	2.6393E-08	9.4007E-09	2.8319E-08
	1-GROUP	4.0850E-03	3.6683E-03	3.7911E-03	3.5549E-03
PRODUCT	FAST	1.2379E-02	1.1129E-02	1.1484E-02	1.0773E-02
	RESONANCE	9.2659E-05	8.9219E-05	9.0717E-05	9.5976E-05
	THERMAL	2.6979E-08	7.4112E-08	2.6397E-08	7.9520E-08
	1-GROUP	1.2472E-02	1.1219E-02	1.1574E-02	1.0869E-02

===== TABLE S.B.VII.7 REACTION RATES - VOID = 99% FOR AM241 =====

BURNUP		0 GWD/T		50 GWD/T	
VM / VF		0.6	1.1	0.6	1.1
ABSORPT	FAST	0.0000E+00	0.0000E+00	4.2736E-03	4.0977E-03
	RESONANCE	0.0000E+00	0.0000E+00	2.1383E-03	2.3255E-03
	THERMAL	0.0000E+00	0.0000E+00	1.2929E-06	4.7120E-06
	1-GROUP	0.0000E+00	0.0000E+00	6.4131E-03	6.4278E-03
FISSION	FAST	0.0000E+00	0.0000E+00	7.5642E-04	7.0872E-04
	RESONANCE	0.0000E+00	0.0000E+00	1.9836E-05	2.1716E-05
	THERMAL	0.0000E+00	0.0000E+00	5.2256E-09	1.9157E-08
	1-GROUP	0.0000E+00	0.0000E+00	7.7625E-04	7.3045E-04
PRODUCT	FAST	0.0000E+00	0.0000E+00	2.6716E-03	2.5074E-03
	RESONANCE	0.0000E+00	0.0000E+00	6.3947E-05	7.0009E-05
	THERMAL	0.0000E+00	0.0000E+00	1.6845E-08	6.1753E-08
	1-GROUP	0.0000E+00	0.0000E+00	2.7355E-03	2.5775E-03

===== TABLE S.B.VII.8 REACTION RATES - VOID = 99% FOR AM243 =====

BURNUP		0 GWD/T		50 GWD/T	
VM / VF		0.6	1.1	0.6	1.1
ABSORPT	FAST	0.0000E+00	0.0000E+00	5.0115E-03	5.2959E-03
	RESONANCE	0.0000E+00	0.0000E+00	2.8476E-03	3.4245E-03
	THERMAL	0.0000E+00	0.0000E+00	3.7917E-06	1.4360E-05
	1-GROUP	0.0000E+00	0.0000E+00	7.8628E-03	8.7346E-03
FISSION	FAST	0.0000E+00	0.0000E+00	8.7989E-04	9.0728E-04
	RESONANCE	0.0000E+00	0.0000E+00	8.6952E-06	1.0457E-05
	THERMAL	0.0000E+00	0.0000E+00	1.1277E-08	4.2610E-08
	1-GROUP	0.0000E+00	0.0000E+00	8.8859E-04	9.1778E-04
PRODUCT	FAST	0.0000E+00	0.0000E+00	3.1289E-03	3.2328E-03
	RESONANCE	0.0000E+00	0.0000E+00	2.7910E-05	3.3566E-05
	THERMAL	0.0000E+00	0.0000E+00	3.6195E-08	1.3675E-07
	1-GROUP	0.0000E+00	0.0000E+00	3.1569E-03	3.2665E-03

===== TABLE S.B.VII.9 REACTION RATES - VOID = 99% FOR TOTAL FISSION PRODUCTS =====

BURNUP		0 GWD/T		50 GWD/T	
VM / VF		0.6	1.1	0.6	1.1
ABSORPT	FAST	0.0000E+00	0.0000E+00	5.9716E-03	6.0200E-03
	RESONANCE	0.0000E+00	0.0000E+00	4.8114E-03	5.4201E-03
	THERMAL	0.0000E+00	0.0000E+00	1.6903E-06	6.3561E-06
	1-GROUP	0.0000E+00	0.0000E+00	1.0785E-02	1.1446E-02
FISSION	FAST	0.0000E+00	0.0000E+00	0.0000E+00	0.0000E+00
	RESONANCE	0.0000E+00	0.0000E+00	0.0000E+00	0.0000E+00
	THERMAL	0.0000E+00	0.0000E+00	0.0000E+00	0.0000E+00
	1-GROUP	0.0000E+00	0.0000E+00	0.0000E+00	0.0000E+00
PRODUCT	FAST	0.0000E+00	0.0000E+00	0.0000E+00	0.0000E+00
	RESONANCE	0.0000E+00	0.0000E+00	0.0000E+00	0.0000E+00
	THERMAL	0.0000E+00	0.0000E+00	0.0000E+00	0.0000E+00
	1-GROUP	0.0000E+00	0.0000E+00	0.0000E+00	0.0000E+00

Appendix II Cross-Sections and Reaction Rates (VIM)

===== TABLE V.B.II.1 CROSS-SECTIONS FOR U-235 =====

BURNUP		0 GWD/T		50 GWD/T	
VM / VF		0.6	1.1	0.6	1.1
SIGMA-A	FAST	1.7813E+00	1.7499E+00	1.7807E+00	1.7495E+00
		(5.29E-02%)	(6.73E-02%)	(5.03E-02%)	(5.37E-02%)
	RESONANCE	2.6745E+01	3.0685E+01	2.7017E+01	3.1101E+01
		(2.67E-01%)	(3.21E-01%)	(2.86E-01%)	(3.00E-01%)
	THERMAL	5.5386E+01	7.6826E+01	5.5559E+01	8.3391E+01
		(5.70E-01%)	(4.40E-01%)	(4.59E-01%)	(4.67E-01%)
	1-GROUP	9.1196E+00	1.2522E+01	9.1527E+00	1.2969E+01
		(2.69E-01%)	(2.85E-01%)	(2.50E-01%)	(2.62E-01%)
SIGMA-F	FAST	1.4726E+00	1.4607E+00	1.4727E+00	1.4608E+00
		(4.11E-02%)	(5.61E-02%)	(3.98E-02%)	(4.38E-02%)
	RESONANCE	1.6612E+01	1.8739E+01	1.6791E+01	1.8980E+01
		(2.47E-01%)	(3.06E-01%)	(2.62E-01%)	(2.81E-01%)
	THERMAL	4.3711E+01	6.2847E+01	4.3907E+01	6.8503E+01
		(6.10E-01%)	(4.56E-01%)	(5.09E-01%)	(4.88E-01%)
	1-GROUP	6.1103E+00	8.5832E+00	6.1238E+00	8.9202E+00
		(2.53E-01%)	(2.78E-01%)	(2.26E-01%)	(2.59E-01%)
SIGMA-P	FAST	3.7258E+00	3.7251E+00	3.7272E+00	3.7268E+00
		(3.86E-02%)	(5.41E-02%)	(3.87E-02%)	(4.48E-02%)
	RESONANCE	4.0345E+01	4.5510E+01	4.0781E+01	4.6096E+01
		(2.47E-01%)	(3.06E-01%)	(2.62E-01%)	(2.81E-01%)
	THERMAL	1.0616E+02	1.5263E+02	1.0663E+02	1.6637E+02
		(6.10E-01%)	(4.56E-01%)	(5.09E-01%)	(4.88E-01%)
	1-GROUP	1.4949E+01	2.0969E+01	1.4982E+01	2.1788E+01
		(2.51E-01%)	(2.77E-01%)	(2.24E-01%)	(2.57E-01%)

===== TABLE V.B.II.2 CROSS-SECTIONS FOR U-238 =====

BURNUP		0 GWD/T		50 GWD/T	
VM / VF		0.6	1.1	0.6	1.1
SIGMA-A	FAST	2.9835E-01	3.1687E-01	2.9964E-01	3.1777E-01
		(1.05E-01%)	(1.09E-01%)	(1.12E-01%)	(1.30E-01%)
	RESONANCE	1.8327E+00	2.1422E+00	1.8937E+00	2.1887E+00
		(3.98E-01%)	(4.20E-01%)	(3.97E-01%)	(4.33E-01%)
	THERMAL	5.3909E-01	5.8162E-01	5.3800E-01	6.0329E-01
		(2.30E-01%)	(2.33E-01%)	(2.34E-01%)	(2.43E-01%)
	1-GROUP	6.9058E-01	8.1007E-01	7.0843E-01	8.2799E-01
		(2.65E-01%)	(3.01E-01%)	(2.85E-01%)	(3.08E-01%)
SIGMA-F	FAST	1.3301E-01	1.6202E-01	1.3459E-01	1.6304E-01
		(3.05E-01%)	(2.53E-01%)	(2.95E-01%)	(2.90E-01%)
	RESONANCE	1.5181E-04	1.4066E-04	1.4913E-04	1.3634E-04
		(2.93E+00%)	(3.26E+00%)	(2.90E+00%)	(3.71E+00%)
	THERMAL	5.2602E-07	6.0101E-07	5.2318E-07	6.2865E-07
		(2.73E-01%)	(2.63E-01%)	(2.49E-01%)	(2.78E-01%)
	1-GROUP	9.6888E-02	1.1251E-01	9.8054E-02	1.1286E-01
		(3.22E-01%)	(2.73E-01%)	(3.10E-01%)	(3.05E-01%)
SIGMA-P	FAST	3.7274E-01	4.5672E-01	3.7723E-01	4.6010E-01
		(3.19E-01%)	(2.76E-01%)	(3.06E-01%)	(3.11E-01%)
	RESONANCE	3.5215E-04	3.2628E-04	3.4593E-04	3.1626E-04
		(2.93E+00%)	(3.26E+00%)	(2.90E+00%)	(3.71E+00%)
	THERMAL	1.2201E-06	1.3940E-06	1.2135E-06	1.4581E-06
		(2.73E-01%)	(2.63E-01%)	(2.49E-01%)	(2.78E-01%)
	1-GROUP	2.7149E-01	3.1713E-01	2.7480E-01	3.1847E-01
		(3.35E-01%)	(2.96E-01%)	(3.21E-01%)	(3.27E-01%)

===== TABLE V.B.II.3 CROSS-SECTIONS FOR PU239 =====

BURNUP		0 GWD/T		50 GWD/T	
VM / VF		0.6	1.1	0.6	1.1
SIGMA-A	FAST	1.9476E+00	1.9594E+00	1.9489E+00	1.9597E+00
		(2.79E-02%)	(4.32E-02%)	(2.72E-02%)	(3.45E-02%)
	RESONANCE	2.3873E+01	2.8534E+01	2.4324E+01	2.9828E+01
		(3.19E-01%)	(3.01E-01%)	(2.89E-01%)	(3.42E-01%)
	THERMAL	1.3961E+02	2.2474E+02	1.4480E+02	2.6121E+02
		(7.68E-01%)	(4.94E-01%)	(7.31E-01%)	(5.37E-01%)
	1-GROUP	1.0137E+01	1.8265E+01	1.0198E+01	2.0184E+01
		(3.00E-01%)	(3.01E-01%)	(2.63E-01%)	(3.45E-01%)
SIGMA-F	FAST	1.7342E+00	1.7626E+00	1.7359E+00	1.7632E+00
		(2.65E-02%)	(4.11E-02%)	(2.39E-02%)	(3.33E-02%)
	RESONANCE	1.3426E+01	1.6015E+01	1.3641E+01	1.6713E+01
		(3.30E-01%)	(3.15E-01%)	(2.80E-01%)	(3.32E-01%)
	THERMAL	9.2286E+01	1.4666E+02	9.5304E+01	1.6931E+02
		(7.38E-01%)	(4.76E-01%)	(6.94E-01%)	(5.17E-01%)
	1-GROUP	6.4314E+00	1.1567E+01	6.4412E+00	1.2726E+01
		(2.81E-01%)	(2.93E-01%)	(2.48E-01%)	(3.33E-01%)
SIGMA-P	FAST	5.2673E+00	5.4015E+00	5.2749E+00	5.4057E+00
		(3.28E-02%)	(4.60E-02%)	(2.93E-02%)	(4.10E-02%)
	RESONANCE	3.8677E+01	4.6132E+01	3.9294E+01	4.8144E+01
		(3.30E-01%)	(3.15E-01%)	(2.80E-01%)	(3.32E-01%)
	THERMAL	2.6584E+02	4.2248E+02	2.7453E+02	4.8770E+02
		(7.38E-01%)	(4.76E-01%)	(6.94E-01%)	(5.17E-01%)
	1-GROUP	1.8725E+01	3.3544E+01	1.8755E+01	3.6884E+01
		(2.78E-01%)	(2.91E-01%)	(2.45E-01%)	(3.31E-01%)

===== TABLE V.B.II.4 CROSS-SECTIONS FOR PU240 =====

BURNUP		0 GWD/T		50 GWD/T	
VM / VF		0.6	1.1	0.6	1.1
SIGMA-A	FAST	1.0225E+00	1.0958E+00	1.0255E+00	1.0967E+00
		(8.91E-02%)	(9.19E-02%)	(7.91E-02%)	(8.31E-02%)
	RESONANCE	8.9806E+00	1.0326E+01	9.0065E+00	1.0604E+01
		(6.66E-01%)	(7.57E-01%)	(6.87E-01%)	(7.23E-01%)
	THERMAL	2.4965E+02	2.8709E+02	2.3814E+02	2.9248E+02
		(8.38E-01%)	(5.78E-01%)	(8.97E-01%)	(6.27E-01%)
	1-GROUP	7.8206E+00	1.5454E+01	7.3191E+00	1.5769E+01
		(5.80E-01%)	(5.18E-01%)	(5.28E-01%)	(5.29E-01%)
SIGMA-F	FAST	7.4968E-01	8.4261E-01	7.5335E-01	8.4390E-01
		(1.50E-01%)	(1.44E-01%)	(1.36E-01%)	(1.30E-01%)
	RESONANCE	2.1593E-01	2.1390E-01	2.1478E-01	2.1414E-01
		(5.52E-01%)	(5.32E-01%)	(5.29E-01%)	(5.68E-01%)
	THERMAL	4.9708E-02	5.7257E-02	4.7478E-02	5.8404E-02
		(8.11E-01%)	(5.59E-01%)	(8.67E-01%)	(6.03E-01%)
	1-GROUP	6.0137E-01	6.4380E-01	6.0398E-01	6.4344E-01
		(1.62E-01%)	(1.65E-01%)	(1.36E-01%)	(1.40E-01%)
SIGMA-P	FAST	2.3081E+00	2.6137E+00	2.3205E+00	2.6194E+00
		(1.59E-01%)	(1.52E-01%)	(1.43E-01%)	(1.41E-01%)
	RESONANCE	6.0115E-01	5.9549E-01	5.9795E-01	5.9617E-01
		(5.52E-01%)	(5.32E-01%)	(5.29E-01%)	(5.68E-01%)
	THERMAL	1.3838E-01	1.5939E-01	1.3217E-01	1.6258E-01
		(8.11E-01%)	(5.59E-01%)	(8.67E-01%)	(6.03E-01%)
	1-GROUP	1.8351E+00	1.9783E+00	1.8440E+00	1.9781E+00
		(1.71E-01%)	(1.72E-01%)	(1.45E-01%)	(1.49E-01%)

===== TABLE V.B.II.5 CROSS-SECTIONS FOR PU241 =====

BURNUP		0 GWD/T		50 GWD/T	
VM / VF		0.6	1.1	0.6	1.1
SIGMA-A	FAST	2.2241E+00	2.1892E+00	2.2240E+00	2.1892E+00
		(4.61E-02%)	(6.10E-02%)	(4.51E-02%)	(4.97E-02%)
	RESONANCE	4.0614E+01	5.1202E+01	3.9961E+01	5.0545E+01
		(3.41E-01%)	(3.04E-01%)	(3.32E-01%)	(3.15E-01%)
	THERMAL	1.1418E+02	1.8517E+02	1.1707E+02	2.0941E+02
		(7.54E-01%)	(5.30E-01%)	(6.33E-01%)	(5.56E-01%)
	1-GROUP	1.4078E+01	2.2763E+01	1.3868E+01	2.3703E+01
		(3.10E-01%)	(2.90E-01%)	(2.94E-01%)	(3.03E-01%)
SIGMA-F	FAST	1.9378E+00	1.9185E+00	1.9382E+00	1.9188E+00
		(4.07E-02%)	(5.61E-02%)	(4.00E-02%)	(4.43E-02%)
	RESONANCE	3.0664E+01	3.8463E+01	3.0180E+01	3.7961E+01
		(3.01E-01%)	(2.92E-01%)	(2.90E-01%)	(2.86E-01%)
	THERMAL	8.7080E+01	1.3964E+02	8.9098E+01	1.5734E+02
		(7.40E-01%)	(5.31E-01%)	(6.21E-01%)	(5.57E-01%)
	1-GROUP	1.0834E+01	1.7312E+01	1.0674E+01	1.7994E+01
		(2.85E-01%)	(2.88E-01%)	(2.60E-01%)	(2.91E-01%)
SIGMA-P	FAST	5.9131E+00	5.8962E+00	5.9162E+00	5.8990E+00
		(3.69E-02%)	(5.32E-02%)	(3.71E-02%)	(4.21E-02%)
	RESONANCE	8.9917E+01	1.1279E+02	8.8498E+01	1.1132E+02
		(3.01E-01%)	(2.92E-01%)	(2.90E-01%)	(2.86E-01%)
	THERMAL	2.5535E+02	4.0946E+02	2.6126E+02	4.6137E+02
		(7.40E-01%)	(5.31E-01%)	(6.21E-01%)	(5.57E-01%)
	1-GROUP	3.1936E+01	5.0951E+01	3.1469E+01	5.2954E+01
		(2.83E-01%)	(2.87E-01%)	(2.59E-01%)	(2.90E-01%)

===== TABLE V.B.II.6 CROSS-SECTIONS FOR PU242 =====

BURNUP		0 GWD/T		50 GWD/T	
VM / VF		0.6	1.1	0.6	1.1
SIGMA-A	FAST	8.2855E-01	8.9480E-01	8.3131E-01	8.9574E-01
		(1.00E-01%)	(1.02E-01%)	(9.09E-02%)	(9.03E-02%)
	RESONANCE	5.1249E+00	5.3980E+00	5.1440E+00	5.5988E+00
		(1.02E+00%)	(9.75E-01%)	(9.33E-01%)	(1.02E+00%)
	THERMAL	1.8636E+02	1.7199E+02	2.1443E+02	1.7511E+02
		(1.68E+00%)	(1.56E+00%)	(1.69E+00%)	(1.55E+00%)
	1-GROUP	5.4867E+00	9.2157E+00	5.7709E+00	9.4069E+00
		(1.12E+00%)	(1.23E+00%)	(1.22E+00%)	(1.20E+00%)
SIGMA-F	FAST	5.8836E-01	6.7073E-01	5.9169E-01	6.7195E-01
		(1.69E-01%)	(1.60E-01%)	(1.53E-01%)	(1.45E-01%)
	RESONANCE	2.7794E-02	2.7776E-02	2.7407E-02	2.7354E-02
		(1.14E+00%)	(1.16E+00%)	(1.18E+00%)	(1.13E+00%)
	THERMAL	1.3957E-01	1.3306E-01	1.5822E-01	1.3612E-01
		(1.50E+00%)	(1.35E+00%)	(1.53E+00%)	(1.33E+00%)
	1-GROUP	4.3811E-01	4.7849E-01	4.4069E-01	4.7794E-01
		(1.91E-01%)	(1.80E-01%)	(1.69E-01%)	(1.69E-01%)
SIGMA-P	FAST	1.8263E+00	2.0953E+00	1.8375E+00	2.1005E+00
		(1.77E-01%)	(1.67E-01%)	(1.59E-01%)	(1.54E-01%)
	RESONANCE	7.8049E-02	7.8000E-02	7.6961E-02	7.6812E-02
		(1.14E+00%)	(1.16E+00%)	(1.18E+00%)	(1.13E+00%)
	THERMAL	3.9192E-01	3.7363E-01	4.4429E-01	3.8223E-01
		(1.50E+00%)	(1.35E+00%)	(1.53E+00%)	(1.33E+00%)
	1-GROUP	1.3571E+00	1.4907E+00	1.3656E+00	1.4899E+00
		(1.98E-01%)	(1.87E-01%)	(1.75E-01%)	(1.77E-01%)

===== TABLE V.B.II.7 CROSS-SECTIONS FOR AM241 =====

BURNUP		0 GWD/T		50 GWD/T	
VM / VF		0.6	1.1	0.6	1.1
SIGMA-A	FAST	0.0000E+00	0.0000E+00	1.7434E+00	1.7793E+00
		(0.00E+00%)	(0.00E+00%)	(5.50E-02%)	(5.68E-02%)
	RESONANCE	0.0000E+00	0.0000E+00	2.3267E+01	2.7606E+01
		(0.00E+00%)	(0.00E+00%)	(3.39E-01%)	(3.71E-01%)
	THERMAL	0.0000E+00	0.0000E+00	3.0933E+02	3.5645E+02
		(0.00E+00%)	(0.00E+00%)	(8.49E-01%)	(5.49E-01%)
	1-GROUP	0.0000E+00	0.0000E+00	1.2742E+01	2.3435E+01
		(0.00E+00%)	(0.00E+00%)	(4.76E-01%)	(4.34E-01%)
SIGMA-F	FAST	0.0000E+00	0.0000E+00	7.2644E-01	8.4278E-01
		(0.00E+00%)	(0.00E+00%)	(1.90E-01%)	(1.73E-01%)
	RESONANCE	0.0000E+00	0.0000E+00	1.8010E-01	2.1437E-01
		(0.00E+00%)	(0.00E+00%)	(4.69E-01%)	(5.59E-01%)
	THERMAL	0.0000E+00	0.0000E+00	1.5167E+00	1.8081E+00
		(0.00E+00%)	(0.00E+00%)	(1.00E+00%)	(6.19E-01%)
	1-GROUP	0.0000E+00	0.0000E+00	6.0203E-01	7.1562E-01
		(0.00E+00%)	(0.00E+00%)	(1.97E-01%)	(1.69E-01%)
SIGMA-P	FAST	0.0000E+00	0.0000E+00	2.5988E+00	3.0316E+00
		(0.00E+00%)	(0.00E+00%)	(1.95E-01%)	(1.83E-01%)
	RESONANCE	0.0000E+00	0.0000E+00	5.8058E-01	6.9103E-01
		(0.00E+00%)	(0.00E+00%)	(4.69E-01%)	(5.59E-01%)
	THERMAL	0.0000E+00	0.0000E+00	4.8892E+00	5.8285E+00
		(0.00E+00%)	(0.00E+00%)	(1.00E+00%)	(6.19E-01%)
	1-GROUP	0.0000E+00	0.0000E+00	2.1279E+00	2.5247E+00
		(0.00E+00%)	(0.00E+00%)	(2.02E-01%)	(1.78E-01%)

===== TABLE V.B.II.8 CROSS-SECTIONS FOR AM243 =====

BURNUP		0 GWD/T		50 GWD/T	
VM / VF		0.6	1.1	0.6	1.1
SIGMA-A	FAST	0.0000E+00	0.0000E+00	1.3906E+00	1.4254E+00
		(0.00E+00%)	(0.00E+00%)	(6.99E-02%)	(6.93E-02%)
	RESONANCE	0.0000E+00	0.0000E+00	2.3751E+01	2.8514E+01
		(0.00E+00%)	(0.00E+00%)	(4.04E-01%)	(3.90E-01%)
	THERMAL	0.0000E+00	0.0000E+00	4.3738E+02	3.8479E+02
		(0.00E+00%)	(0.00E+00%)	(1.43E+00%)	(1.17E+00%)
	1-GROUP	0.0000E+00	0.0000E+00	1.4913E+01	2.4613E+01
		(0.00E+00%)	(0.00E+00%)	(8.40E-01%)	(8.87E-01%)
SIGMA-F	FAST	0.0000E+00	0.0000E+00	6.0005E-01	7.0037E-01
		(0.00E+00%)	(0.00E+00%)	(1.97E-01%)	(1.81E-01%)
	RESONANCE	0.0000E+00	0.0000E+00	7.2525E-02	8.7031E-02
		(0.00E+00%)	(0.00E+00%)	(4.11E-01%)	(4.03E-01%)
	THERMAL	0.0000E+00	0.0000E+00	1.2576E+00	1.1022E+00
		(0.00E+00%)	(0.00E+00%)	(1.39E+00%)	(1.15E+00%)
	1-GROUP	0.0000E+00	0.0000E+00	4.7803E-01	5.5375E-01
		(0.00E+00%)	(0.00E+00%)	(2.09E-01%)	(1.80E-01%)
SIGMA-P	FAST	0.0000E+00	0.0000E+00	2.1588E+00	2.5340E+00
		(0.00E+00%)	(0.00E+00%)	(2.03E-01%)	(1.92E-01%)
	RESONANCE	0.0000E+00	0.0000E+00	2.3277E-01	2.7933E-01
		(0.00E+00%)	(0.00E+00%)	(4.11E-01%)	(4.03E-01%)
	THERMAL	0.0000E+00	0.0000E+00	4.0363E+00	3.5375E+00
		(0.00E+00%)	(0.00E+00%)	(1.39E+00%)	(1.15E+00%)
	1-GROUP	0.0000E+00	0.0000E+00	1.7039E+00	1.9753E+00
		(0.00E+00%)	(0.00E+00%)	(2.13E-01%)	(1.88E-01%)

===== TABLE V.B.II.9 CROSS-SECTIONS FOR STRUCTURAL MATERIALS AT 0 GWD/T =====

SIGMA-A	FAST	3-GROUP RESONANCE	THERMAL	1-GROUP
FE	9.1642E-03	5.3731E-02	4.5938E-01	2.9092E-02
	(4.26E-01%)	(1.40E+00%)	(4.53E-01%)	(5.60E-01%)
CR	5.6735E-03	7.0279E-02	5.7244E-01	3.2908E-02
	(5.16E-01%)	(9.20E-01%)	(4.53E-01%)	(5.68E-01%)
NI	4.9876E-02	6.4616E-02	8.2526E-01	6.8531E-02
	(3.43E-01%)	(1.91E-01%)	(4.53E-01%)	(2.45E-01%)
MN-55	9.9513E-03	1.2647E+00	2.4918E+00	3.7471E-01
	(5.12E-01%)	(4.92E-01%)	(4.51E-01%)	(4.58E-01%)
ZRY	1.3181E-02	1.0620E-01	4.8805E-02	3.9237E-02
	(2.04E-01%)	(8.62E-01%)	(3.50E-01%)	(6.29E-01%)

===== TABLE V.8.III.1 REACTION RATES - VOID = 0% FOR U-235 =====

BURNUP		0 GWD/T		50 GWD/T	
VM / VF		0.6	1.1	0.6	1.1
ABSORPT	FAST	1.8790E-03	1.2559E-03	9.6076E-04	6.6152E-04
		(2.54E-01%)	(2.57E-01%)	(2.56E-01%)	(2.71E-01%)
	RESONANCE	9.7873E-03	8.3807E-03	5.0793E-03	4.5264E-03
		(4.19E-01%)	(4.28E-01%)	(3.89E-01%)	(3.95E-01%)
	THERMAL	1.5451E-03	3.3108E-03	7.4100E-04	1.8986E-03
		(7.80E-01%)	(5.74E-01%)	(7.50E-01%)	(6.08E-01%)
	1-GROUP	1.3211E-02	1.2947E-02	6.7811E-03	7.0865E-03
		(3.69E-01%)	(3.67E-01%)	(3.36E-01%)	(3.48E-01%)
FISSION	FAST	1.5534E-03	1.0484E-03	7.9458E-04	5.5236E-04
		(2.53E-01%)	(2.57E-01%)	(2.55E-01%)	(2.71E-01%)
	RESONANCE	6.0790E-03	5.1179E-03	3.1568E-03	2.7624E-03
		(4.14E-01%)	(4.16E-01%)	(3.74E-01%)	(3.83E-01%)
	THERMAL	1.2194E-03	2.7084E-03	5.8560E-04	1.5596E-03
		(7.89E-01%)	(5.88E-01%)	(7.72E-01%)	(6.23E-01%)
	1-GROUP	8.8519E-03	8.8747E-03	4.5370E-03	4.8743E-03
		(3.56E-01%)	(3.59E-01%)	(3.21E-01%)	(3.47E-01%)
PRODUCT	FAST	3.9300E-03	2.6737E-03	2.0110E-03	1.4092E-03
		(2.54E-01%)	(2.58E-01%)	(2.55E-01%)	(2.72E-01%)
	RESONANCE	1.4764E-02	1.2430E-02	7.6669E-03	6.7089E-03
		(4.14E-01%)	(4.16E-01%)	(3.74E-01%)	(3.83E-01%)
	THERMAL	2.9615E-03	6.5778E-03	1.4222E-03	3.7877E-03
		(7.89E-01%)	(5.88E-01%)	(7.72E-01%)	(6.23E-01%)
	1-GROUP	2.1656E-02	2.1682E-02	1.1101E-02	1.1906E-02
		(3.54E-01%)	(3.57E-01%)	(3.19E-01%)	(3.46E-01%)

===== TABLE V.8.III.2 REACTION RATES - VOID = 0% FOR U-238 =====

BURNUP		0 GWD/T		50 GWD/T	
VM / VF		0.6	1.1	0.6	1.1
ABSORPT	FAST	1.0458E-01	7.5566E-02	1.0043E-01	7.3006E-02
		(2.81E-01%)	(2.81E-01%)	(2.74E-01%)	(3.06E-01%)
	RESONANCE	2.2286E-01	1.9440E-01	2.2115E-01	1.9354E-01
		(4.57E-01%)	(4.84E-01%)	(4.97E-01%)	(4.99E-01%)
	THERMAL	4.9973E-03	8.3280E-03	4.4574E-03	8.3453E-03
		(6.74E-01%)	(5.01E-01%)	(7.08E-01%)	(4.96E-01%)
	1-GROUP	3.3244E-01	2.7829E-01	3.2604E-01	2.7490E-01
		(3.48E-01%)	(3.65E-01%)	(3.74E-01%)	(3.94E-01%)
FISSION	FAST	4.6622E-02	3.8638E-02	4.5110E-02	3.7459E-02
		(4.17E-01%)	(3.76E-01%)	(3.92E-01%)	(4.15E-01%)
	RESONANCE	1.8460E-05	1.2764E-05	1.7416E-05	1.2056E-05
		(2.95E+00%)	(3.27E+00%)	(2.88E+00%)	(3.73E+00%)
	THERMAL	4.8762E-09	8.6057E-09	4.3346E-09	8.6961E-09
		(6.72E-01%)	(5.13E-01%)	(6.97E-01%)	(5.08E-01%)
	1-GROUP	4.6641E-02	3.8650E-02	4.5127E-02	3.7471E-02
		(4.17E-01%)	(3.76E-01%)	(3.92E-01%)	(4.14E-01%)
PRODUCT	FAST	1.3066E-01	1.0892E-01	1.2644E-01	1.0571E-01
		(4.28E-01%)	(3.93E-01%)	(4.00E-01%)	(4.32E-01%)
	RESONANCE	4.2823E-05	2.9609E-05	4.0401E-05	2.7967E-05
		(2.95E+00%)	(3.27E+00%)	(2.88E+00%)	(3.73E+00%)
	THERMAL	1.1310E-08	1.9961E-08	1.0054E-08	2.0171E-08
		(6.72E-01%)	(5.13E-01%)	(6.97E-01%)	(5.08E-01%)
	1-GROUP	1.3070E-01	1.0895E-01	1.2648E-01	1.0574E-01
		(4.28E-01%)	(3.93E-01%)	(4.00E-01%)	(4.32E-01%)

===== TABLE V.B.III.3 REACTION RATES - VOID = 0% FOR PU239 =====

BURNUP		0 GWD/T		50 GWD/T	
VM / VF		0.6	1.1	0.6	1.1
ABSORPT	FAST	5.2693E-02	3.1038E-02	4.6885E-02	2.3038E-02
		(2.53E-01%)	(2.58E-01%)	(2.53E-01%)	(2.70E-01%)
	RESONANCE	2.2407E-01	1.7200E-01	2.0390E-01	1.3497E-01
		(4.10E-01%)	(3.97E-01%)	(4.19E-01%)	(4.48E-01%)
	THERMAL	9.9890E-02	2.1375E-01	8.6111E-02	1.8489E-01
		(8.14E-01%)	(5.83E-01%)	(8.91E-01%)	(6.15E-01%)
	1-GROUP	3.7666E-01	4.1679E-01	3.3690E-01	3.4289E-01
		(3.78E-01%)	(3.76E-01%)	(3.57E-01%)	(4.20E-01%)
FISSION	FAST	4.6917E-02	2.7920E-02	4.1762E-02	2.0729E-02
		(2.55E-01%)	(2.61E-01%)	(2.53E-01%)	(2.71E-01%)
	RESONANCE	1.2602E-01	9.6532E-02	1.1435E-01	7.5624E-02
		(4.25E-01%)	(4.10E-01%)	(4.13E-01%)	(4.45E-01%)
	THERMAL	6.6031E-02	1.3949E-01	5.6675E-02	1.1984E-01
		(7.98E-01%)	(5.72E-01%)	(8.66E-01%)	(6.04E-01%)
	1-GROUP	2.3897E-01	2.6395E-01	2.1278E-01	2.1619E-01
		(3.70E-01%)	(3.70E-01%)	(3.46E-01%)	(4.13E-01%)
PRODUCT	FAST	1.4251E-01	8.5563E-02	1.2690E-01	6.3549E-02
		(2.57E-01%)	(2.63E-01%)	(2.54E-01%)	(2.74E-01%)
	RESONANCE	3.6302E-01	2.7807E-01	3.2940E-01	2.1784E-01
		(4.25E-01%)	(4.10E-01%)	(4.13E-01%)	(4.45E-01%)
	THERMAL	1.9021E-01	4.0182E-01	1.6326E-01	3.4521E-01
		(7.98E-01%)	(5.72E-01%)	(8.66E-01%)	(6.04E-01%)
	1-GROUP	6.9573E-01	7.6546E-01	6.1956E-01	6.2660E-01
		(3.67E-01%)	(3.68E-01%)	(3.43E-01%)	(4.11E-01%)

===== TABLE V.B.III.4 REACTION RATES - VOID = 0% FOR PU240 =====

BURNUP		0 GWD/T		50 GWD/T	
VM / VF		0.6	1.1	0.6	1.1
ABSORPT	FAST	1.2162E-02	7.6302E-03	1.2325E-02	6.8996E-03
		(2.74E-01%)	(2.85E-01%)	(2.66E-01%)	(2.87E-01%)
	RESONANCE	3.7060E-02	2.7360E-02	3.7717E-02	2.5678E-02
		(6.81E-01%)	(7.65E-01%)	(7.38E-01%)	(7.67E-01%)
	THERMAL	7.8537E-02	1.2003E-01	7.0747E-02	1.1079E-01
		(9.01E-01%)	(7.22E-01%)	(8.60E-01%)	(6.82E-01%)
	1-GROUP	1.2776E-01	1.5502E-01	1.2079E-01	1.4336E-01
		(6.34E-01%)	(5.55E-01%)	(5.61E-01%)	(5.68E-01%)
FISSION	FAST	8.9176E-03	5.8672E-03	9.0539E-03	5.3091E-03
		(3.04E-01%)	(3.15E-01%)	(2.88E-01%)	(3.09E-01%)
	RESONANCE	8.9108E-04	5.6676E-04	8.9945E-04	5.1854E-04
		(6.02E-01%)	(5.72E-01%)	(6.11E-01%)	(6.27E-01%)
	THERMAL	1.5637E-05	2.3938E-05	1.4105E-05	2.2123E-05
		(8.81E-01%)	(7.07E-01%)	(8.39E-01%)	(6.63E-01%)
	1-GROUP	9.8243E-03	6.4579E-03	9.9675E-03	5.8498E-03
		(2.94E-01%)	(3.05E-01%)	(2.75E-01%)	(2.98E-01%)
PRODUCT	FAST	2.7454E-02	1.8199E-02	2.7889E-02	1.6479E-02
		(3.10E-01%)	(3.19E-01%)	(2.92E-01%)	(3.15E-01%)
	RESONANCE	2.4807E-03	1.5779E-03	2.5040E-03	1.4436E-03
		(6.02E-01%)	(5.72E-01%)	(6.11E-01%)	(6.27E-01%)
	THERMAL	4.3532E-05	6.6639E-05	3.9265E-05	6.1586E-05
		(8.81E-01%)	(7.07E-01%)	(8.39E-01%)	(6.63E-01%)
	1-GROUP	2.9979E-02	1.9844E-02	3.0432E-02	1.7984E-02
		(3.00E-01%)	(3.09E-01%)	(2.79E-01%)	(3.04E-01%)

===== TABLE V.8.III.5 REACTION RATES - VOID = 0% FOR PU241 =====

BURNUP		0 GWD/T		50 GWD/T	
VM / VF		0.6	1.1	0.6	1.1
ABSORPT	FAST	1.0645E-02	6.1341E-03	1.0899E-02	7.6057E-03
		(2.52E-01%)	(2.57E-01%)	(2.54E-01%)	(2.70E-01%)
	RESONANCE	6.7435E-02	5.4592E-02	6.8239E-02	6.7591E-02
		(4.85E-01%)	(4.13E-01%)	(4.50E-01%)	(4.17E-01%)
	THERMAL	1.4453E-02	3.1153E-02	1.4182E-02	4.3805E-02
		(8.58E-01%)	(6.12E-01%)	(8.21E-01%)	(6.48E-01%)
	1-GROUP	9.2533E-02	9.1879E-02	9.3320E-02	1.1900E-01
		(4.06E-01%)	(3.67E-01%)	(3.83E-01%)	(3.96E-01%)
FISSION	FAST	9.2744E-03	5.3753E-03	9.4983E-03	6.6663E-03
		(2.52E-01%)	(2.57E-01%)	(2.53E-01%)	(2.71E-01%)
	RESONANCE	5.0914E-02	4.1009E-02	5.1536E-02	5.0763E-02
		(4.54E-01%)	(4.02E-01%)	(4.13E-01%)	(4.03E-01%)
	THERMAL	1.1022E-02	2.3492E-02	1.0794E-02	3.2913E-02
		(8.56E-01%)	(6.17E-01%)	(8.15E-01%)	(6.50E-01%)
	1-GROUP	7.1210E-02	6.9876E-02	7.1828E-02	9.0342E-02
		(3.86E-01%)	(3.64E-01%)	(3.53E-01%)	(3.90E-01%)
PRODUCT	FAST	2.8301E-02	1.6521E-02	2.8993E-02	2.0494E-02
		(2.52E-01%)	(2.58E-01%)	(2.53E-01%)	(2.72E-01%)
	RESONANCE	1.4930E-01	1.2026E-01	1.5112E-01	1.4885E-01
		(4.54E-01%)	(4.02E-01%)	(4.13E-01%)	(4.03E-01%)
	THERMAL	3.2320E-02	6.8885E-02	3.1650E-02	9.6510E-02
		(8.56E-01%)	(6.17E-01%)	(8.15E-01%)	(6.50E-01%)
	1-GROUP	2.0992E-01	2.0566E-01	2.1176E-01	2.6586E-01
		(3.85E-01%)	(3.63E-01%)	(3.52E-01%)	(3.90E-01%)

===== TABLE V.8.III.6 REACTION RATES - VOID = 0% FOR PU242 =====

BURNUP		0 GWD/T		50 GWD/T	
VM / VF		0.6	1.1	0.6	1.1
ABSORPT	FAST	3.0233E-03	1.9124E-03	2.7557E-03	1.8049E-03
		(2.77E-01%)	(1.96E-01%)	(2.68E-01%)	(2.90E-01%)
	RESONANCE	6.4875E-03	4.3900E-03	5.9418E-03	4.3422E-03
		(1.06E+00%)	(9.88E-01%)	(9.95E-01%)	(1.05E+00%)
	THERMAL	1.7984E-02	2.2071E-02	1.7572E-02	2.1245E-02
		(1.67E+00%)	(1.60E+00%)	(1.81E+00%)	(1.54E+00%)
	1-GROUP	2.7494E-02	2.8373E-02	2.6269E-02	2.7391E-02
		(1.16E+00%)	(1.25E+00%)	(1.23E+00%)	(1.23E+00%)
FISSION	FAST	2.1468E-03	1.4335E-03	1.9614E-03	1.3539E-03
		(3.15E-01%)	(2.45E-01%)	(2.97E-01%)	(3.17E-01%)
	RESONANCE	3.5183E-05	2.2590E-05	3.1657E-05	2.1215E-05
		(1.19E+00%)	(1.18E+00%)	(1.19E+00%)	(1.15E+00%)
	THERMAL	1.3469E-05	1.7075E-05	1.2965E-05	1.6514E-05
		(1.50E+00%)	(1.40E+00%)	(1.66E+00%)	(1.33E+00%)
	1-GROUP	2.1955E-03	1.4732E-03	2.0060E-03	1.3916E-03
		(3.13E-01%)	(2.39E-01%)	(2.92E-01%)	(3.17E-01%)
PRODUCT	FAST	6.6640E-03	4.4772E-03	6.0909E-03	4.2323E-03
		(3.20E-01%)	(3.28E-01%)	(3.00E-01%)	(3.23E-01%)
	RESONANCE	9.8800E-05	6.3422E-05	8.8896E-05	5.9573E-05
		(1.19E+00%)	(1.20E+00%)	(1.19E+00%)	(1.15E+00%)
	THERMAL	3.7820E-05	4.7936E-05	3.6406E-05	4.6371E-05
		(1.50E+00%)	(1.42E+00%)	(1.66E+00%)	(1.33E+00%)
	1-GROUP	6.8006E-03	4.5885E-03	6.2162E-03	4.3382E-03
		(3.19E-01%)	(3.24E-01%)	(2.95E-01%)	(3.22E-01%)

===== TABLE V.B.III.7 REACTION RATES - VOID = 0% FOR AM241 =====

BURNUP		0 GWD/T		50 GWD/T	
VM / VF		0.6	1.1	0.6	1.1
ABSORPT	FAST	0.0000E+00	0.0000E+00	1.0287E-03	6.3622E-04
		(0.00E+00%)	(0.00E+00%)	(2.57E-01%)	(2.76E-01%)
	RESONANCE	0.0000E+00	0.0000E+00	4.7840E-03	3.7995E-03
		(0.00E+00%)	(0.00E+00%)	(4.14E-01%)	(4.88E-01%)
	THERMAL	0.0000E+00	0.0000E+00	4.5119E-03	7.6743E-03
		(0.00E+00%)	(0.00E+00%)	(1.03E+00%)	(6.94E-01%)
	1-GROUP	0.0000E+00	0.0000E+00	1.0325E-02	1.2110E-02
		(0.00E+00%)	(0.00E+00%)	(5.28E-01%)	(5.00E-01%)
FISSION	FAST	0.0000E+00	0.0000E+00	4.2865E-04	3.0136E-04
		(0.00E+00%)	(0.00E+00%)	(3.18E-01%)	(3.33E-01%)
	RESONANCE	0.0000E+00	0.0000E+00	3.7031E-05	2.9504E-05
		(0.00E+00%)	(0.00E+00%)	(5.16E-01%)	(6.50E-01%)
	THERMAL	0.0000E+00	0.0000E+00	2.2123E-05	3.8929E-05
		(0.00E+00%)	(0.00E+00%)	(1.09E+00%)	(7.35E-01%)
	1-GROUP	0.0000E+00	0.0000E+00	4.8781E-04	3.6979E-04
		(0.00E+00%)	(0.00E+00%)	(3.07E-01%)	(3.16E-01%)
PRODUCT	FAST	0.0000E+00	0.0000E+00	1.5334E-03	1.0840E-03
		(0.00E+00%)	(0.00E+00%)	(3.21E-01%)	(3.41E-01%)
	RESONANCE	0.0000E+00	0.0000E+00	1.1937E-04	9.5109E-05
		(0.00E+00%)	(0.00E+00%)	(5.16E-01%)	(6.50E-01%)
	THERMAL	0.0000E+00	0.0000E+00	7.1315E-05	1.2549E-04
		(0.00E+00%)	(0.00E+00%)	(1.09E+00%)	(7.35E-01%)
	1-GROUP	0.0000E+00	0.0000E+00	1.7242E-03	1.3046E-03
		(0.00E+00%)	(0.00E+00%)	(3.10E-01%)	(3.22E-01%)

===== TABLE V.B.III.8 REACTION RATES - VOID = 0% FOR AM243 =====

BURNUP		0 GWD/T		50 GWD/T	
VM / VF		0.6	1.1	0.6	1.1
ABSORPT	FAST	0.0000E+00	0.0000E+00	1.1933E-03	8.1536E-04
		(0.00E+00%)	(0.00E+00%)	(2.60E-01%)	(2.80E-01%)
	RESONANCE	0.0000E+00	0.0000E+00	7.1015E-03	6.2780E-03
		(0.00E+00%)	(0.00E+00%)	(4.75E-01%)	(4.80E-01%)
	THERMAL	0.0000E+00	0.0000E+00	9.2774E-03	1.3252E-02
		(0.00E+00%)	(0.00E+00%)	(1.56E+00%)	(1.29E+00%)
	1-GROUP	0.0000E+00	0.0000E+00	1.7573E-02	2.0346E-02
		(0.00E+00%)	(0.00E+00%)	(8.72E-01%)	(8.97E-01%)
FISSION	FAST	0.0000E+00	0.0000E+00	5.1490E-04	4.0063E-04
		(0.00E+00%)	(0.00E+00%)	(3.23E-01%)	(3.38E-01%)
	RESONANCE	0.0000E+00	0.0000E+00	2.1685E-05	1.9163E-05
		(0.00E+00%)	(0.00E+00%)	(4.82E-01%)	(4.89E-01%)
	THERMAL	0.0000E+00	0.0000E+00	2.6676E-05	3.7961E-05
		(0.00E+00%)	(0.00E+00%)	(1.52E+00%)	(1.27E+00%)
	1-GROUP	0.0000E+00	0.0000E+00	5.6326E-04	4.5775E-04
		(0.00E+00%)	(0.00E+00%)	(3.16E-01%)	(3.15E-01%)
PRODUCT	FAST	0.0000E+00	0.0000E+00	1.8525E-03	1.4495E-03
		(0.00E+00%)	(0.00E+00%)	(3.26E-01%)	(3.46E-01%)
	RESONANCE	0.0000E+00	0.0000E+00	6.9600E-05	6.1502E-05
		(0.00E+00%)	(0.00E+00%)	(4.82E-01%)	(4.89E-01%)
	THERMAL	0.0000E+00	0.0000E+00	8.5617E-05	1.2184E-04
		(0.00E+00%)	(0.00E+00%)	(1.52E+00%)	(1.27E+00%)
	1-GROUP	0.0000E+00	0.0000E+00	2.0077E-03	1.6329E-03
		(0.00E+00%)	(0.00E+00%)	(3.18E-01%)	(3.22E-01%)

===== TABLE V.B.III.9 REACTION RATES - VOID = 0% FOR TOTAL FISSION PRODUCTS =====

BURNUP		0 GWD/T		50 GWD/T	
VM / VF		0.6	1.1	0.6	1.1
ABSORPT	FAST	0.0000E+00	0.0000E+00	1.0136E-03	5.9021E-04
		(0.00E+00%)	(0.00E+00%)	(1.39E-01%)	(1.29E-01%)
	RESONANCE	0.0000E+00	0.0000E+00	2.0511E-02	1.9545E-02
		(0.00E+00%)	(0.00E+00%)	(5.13E-01%)	(5.48E-01%)
	THERMAL	0.0000E+00	0.0000E+00	1.0706E-02	1.5694E-02
		(0.00E+00%)	(0.00E+00%)	(9.28E-01%)	(6.43E-01%)
	1-GROUP	0.0000E+00	0.0000E+00	3.2230E-02	3.5829E-02
		(0.00E+00%)	(0.00E+00%)	(4.98E-01%)	(4.54E-01%)
FISSION	FAST	0.0000E+00	0.0000E+00	0.0000E+00	0.0000E+00
		(0.00E+00%)	(0.00E+00%)	(0.00E+00%)	(0.00E+00%)
	RESONANCE	0.0000E+00	0.0000E+00	0.0000E+00	0.0000E+00
		(0.00E+00%)	(0.00E+00%)	(0.00E+00%)	(0.00E+00%)
	THERMAL	0.0000E+00	0.0000E+00	0.0000E+00	0.0000E+00
		(0.00E+00%)	(0.00E+00%)	(0.00E+00%)	(0.00E+00%)
	1-GROUP	0.0000E+00	0.0000E+00	0.0000E+00	0.0000E+00
		(0.00E+00%)	(0.00E+00%)	(0.00E+00%)	(0.00E+00%)
PRODUCT	FAST	0.0000E+00	0.0000E+00	0.0000E+00	0.0000E+00
		(0.00E+00%)	(0.00E+00%)	(0.00E+00%)	(0.00E+00%)
	RESONANCE	0.0000E+00	0.0000E+00	0.0000E+00	0.0000E+00
		(0.00E+00%)	(0.00E+00%)	(0.00E+00%)	(0.00E+00%)
	THERMAL	0.0000E+00	0.0000E+00	0.0000E+00	0.0000E+00
		(0.00E+00%)	(0.00E+00%)	(0.00E+00%)	(0.00E+00%)
	1-GROUP	0.0000E+00	0.0000E+00	0.0000E+00	0.0000E+00
		(0.00E+00%)	(0.00E+00%)	(0.00E+00%)	(0.00E+00%)

===== TABLE IV ABSORPTION RATES - VOID = 0% =====

BURNUP		0 GWD/T		50 GWD/T	
VM / VF		0.6	1.1	0.6	1.1
TC-99	FAST	0.0000E+00	0.0000E+00	2.9842E-04	1.8389E-04
		(0.00E+00%)	(0.00E+00%)	(1.81E-01%)	(2.06E-01%)
	RESONANCE	0.0000E+00	0.0000E+00	4.7705E-03	4.9462E-03
		(0.00E+00%)	(0.00E+00%)	(1.15E+00%)	(1.08E+00%)
	THERMAL	0.0000E+00	0.0000E+00	1.5753E-04	2.5002E-04
		(0.00E+00%)	(0.00E+00%)	(7.60E-01%)	(4.62E-01%)
	1-GROUP	0.0000E+00	0.0000E+00	5.2254E-03	5.3801E-03
		(0.00E+00%)	(0.00E+00%)	(1.05E+00%)	(1.00E+00%)
RH103	FAST	0.0000E+00	0.0000E+00	3.9282E-04	2.2754E-04
		(0.00E+00%)	(0.00E+00%)	(2.88E-01%)	(2.29E-01%)
	RESONANCE	0.0000E+00	0.0000E+00	1.6043E-03	1.0406E-03
		(0.00E+00%)	(0.00E+00%)	(6.40E-01%)	(7.29E-01%)
	THERMAL	0.0000E+00	0.0000E+00	5.3163E-03	8.2653E-03
		(0.00E+00%)	(0.00E+00%)	(1.31E+00%)	(9.54E-01%)
	1-GROUP	0.0000E+00	0.0000E+00	7.3134E-03	9.5334E-03
		(0.00E+00%)	(0.00E+00%)	(9.88E-01%)	(8.34E-01%)
XE131	FAST	0.0000E+00	0.0000E+00	6.3149E-05	3.7970E-05
		(0.00E+00%)	(0.00E+00%)	(3.00E-01%)	(2.21E-01%)
	RESONANCE	0.0000E+00	0.0000E+00	5.4310E-03	5.7255E-03
		(0.00E+00%)	(0.00E+00%)	(1.36E+00%)	(1.24E+00%)
	THERMAL	0.0000E+00	0.0000E+00	1.5855E-04	3.0296E-04
		(0.00E+00%)	(0.00E+00%)	(6.95E-01%)	(4.54E-01%)
	1-GROUP	0.0000E+00	0.0000E+00	5.6527E-03	6.0664E-03
		(0.00E+00%)	(0.00E+00%)	(1.30E+00%)	(1.17E+00%)
CS133	FAST	0.0000E+00	0.0000E+00	2.1085E-04	1.2997E-04
		(0.00E+00%)	(0.00E+00%)	(2.83E-01%)	(3.07E-01%)
	RESONANCE	0.0000E+00	0.0000E+00	7.1135E-03	7.3073E-03
		(0.00E+00%)	(0.00E+00%)	(1.19E+00%)	(1.23E+00%)
	THERMAL	0.0000E+00	0.0000E+00	1.8657E-04	3.2358E-04
		(0.00E+00%)	(0.00E+00%)	(7.37E-01%)	(4.97E-01%)
	1-GROUP	0.0000E+00	0.0000E+00	7.5109E-03	7.7608E-03
		(0.00E+00%)	(0.00E+00%)	(1.12E+00%)	(1.17E+00%)
SM149	FAST	0.0000E+00	0.0000E+00	4.8370E-05	1.0845E-05
		(0.00E+00%)	(0.00E+00%)	(2.79E-01%)	(2.98E-01%)
	RESONANCE	0.0000E+00	0.0000E+00	1.5913E-03	5.2541E-04
		(0.00E+00%)	(0.00E+00%)	(5.53E-01%)	(6.41E-01%)
	THERMAL	0.0000E+00	0.0000E+00	4.8872E-03	6.5523E-03
		(0.00E+00%)	(0.00E+00%)	(1.45E+00%)	(9.60E-01%)
	1-GROUP	0.0000E+00	0.0000E+00	6.5270E-03	7.0885E-03
		(0.00E+00%)	(0.00E+00%)	(1.09E+00%)	(8.94E-01%)

===== TABLE V.B.V.1 REACTION RATES - VOID = 45% FOR U-235 =====

BURNUP		0 GWD/T		50 GWD/T	
VM / VF		0.6	1.1	0.6	1.1
ABSORPT	FAST	2.7510E-03	1.9282E-03	1.4116E-03	1.0166E-03
		(2.58E-01%)	(2.60E-01%)	(2.83E-01%)	(2.75E-01%)
	RESONANCE	1.0651E-02	1.0676E-02	5.5904E-03	5.8591E-03
		(4.43E-01%)	(4.00E-01%)	(4.54E-01%)	(4.22E-01%)
	THERMAL	8.1737E-04	1.9916E-03	3.9236E-04	1.1274E-03
		(1.16E+00%)	(7.00E-01%)	(1.20E+00%)	(8.29E-01%)
	1-GROUP	1.4220E-02	1.4597E-02	7.3943E-03	8.0030E-03
		(3.78E-01%)	(3.46E-01%)	(3.89E-01%)	(3.95E-01%)
FISSION	FAST	2.2530E-03	1.5950E-03	1.1563E-03	8.4083E-04
		(2.57E-01%)	(2.59E-01%)	(2.82E-01%)	(2.75E-01%)
	RESONANCE	6.7686E-03	6.6187E-03	3.5515E-03	3.6334E-03
		(4.18E-01%)	(3.67E-01%)	(4.33E-01%)	(4.08E-01%)
	THERMAL	6.2332E-04	1.5849E-03	2.9874E-04	9.0321E-04
		(1.18E+00%)	(7.12E-01%)	(1.24E+00%)	(8.60E-01%)
	1-GROUP	9.6450E-03	9.7986E-03	5.0066E-03	5.3774E-03
		(3.51E-01%)	(3.22E-01%)	(3.65E-01%)	(3.86E-01%)
PRODUCT	FAST	5.6641E-03	4.0405E-03	2.9075E-03	2.1300E-03
		(2.57E-01%)	(2.61E-01%)	(2.82E-01%)	(2.75E-01%)
	RESONANCE	1.6439E-02	1.6074E-02	8.6257E-03	8.8244E-03
		(4.18E-01%)	(3.67E-01%)	(4.33E-01%)	(4.08E-01%)
	THERMAL	1.5138E-03	3.8492E-03	7.2553E-04	2.1935E-03
		(1.18E+00%)	(7.12E-01%)	(1.24E+00%)	(8.60E-01%)
	1-GROUP	2.3618E-02	2.3964E-02	1.2258E-02	1.3148E-02
		(3.50E-01%)	(3.21E-01%)	(3.65E-01%)	(3.84E-01%)

===== TABLE V.B.V.2 REACTION RATES - VOID = 45% FOR U-238 =====

BURNUP		0 GWD/T		50 GWD/T	
VM / VF		0.6	1.1	0.6	1.1
ABSORPT	FAST	1.4311E-01	1.0830E-01	1.3769E-01	1.0455E-01
		(2.66E-01%)	(2.80E-01%)	(2.99E-01%)	(3.10E-01%)
	RESONANCE	2.4044E-01	2.3132E-01	2.3743E-01	2.3389E-01
		(4.39E-01%)	(4.40E-01%)	(4.57E-01%)	(4.68E-01%)
	THERMAL	3.1374E-03	6.1724E-03	2.7966E-03	6.0922E-03
		(1.08E+00%)	(6.25E-01%)	(1.06E+00%)	(6.78E-01%)
	1-GROUP	3.8668E-01	3.4580E-01	3.7790E-01	3.4452E-01
		(3.28E-01%)	(3.37E-01%)	(3.58E-01%)	(3.70E-01%)
FISSION	FAST	5.4705E-02	4.9087E-02	5.2917E-02	4.7406E-02
		(3.76E-01%)	(3.92E-01%)	(4.42E-01%)	(4.63E-01%)
	RESONANCE	2.5386E-05	1.9399E-05	2.4433E-05	1.8508E-05
		(2.99E+00%)	(3.14E+00%)	(2.96E+00%)	(3.39E+00%)
	THERMAL	2.9365E-09	6.0731E-09	2.6034E-09	6.0388E-09
		(1.08E+00%)	(6.17E-01%)	(1.05E+00%)	(6.90E-01%)
	1-GROUP	5.4731E-02	4.9106E-02	5.2942E-02	4.7424E-02
		(3.76E-01%)	(3.92E-01%)	(4.42E-01%)	(4.62E-01%)
PRODUCT	FAST	1.5300E-01	1.3815E-01	1.4795E-01	1.3331E-01
		(3.86E-01%)	(4.02E-01%)	(4.54E-01%)	(4.75E-01%)
	RESONANCE	5.8888E-05	4.5000E-05	5.6677E-05	4.2933E-05
		(2.99E+00%)	(3.14E+00%)	(2.96E+00%)	(3.39E+00%)
	THERMAL	6.8112E-09	1.4086E-08	6.0386E-09	1.4007E-08
		(1.08E+00%)	(6.17E-01%)	(1.05E+00%)	(6.90E-01%)
	1-GROUP	1.5306E-01	1.3819E-01	1.4802E-01	1.3335E-01
		(3.86E-01%)	(4.02E-01%)	(4.54E-01%)	(4.75E-01%)

===== TABLE V.B.V.3 REACTION RATES - VOID = 45% FOR PU239 =====

BURNUP		0 GWD/T		50 GWD/T	
VM / VF		0.6	1.1	0.6	1.1
ABSORPT	FAST	7.5237E-02	4.6540E-02	6.7140E-02	3.4579E-02
		(2.56E-01%)	(2.60E-01%)	(2.81E-01%)	(2.75E-01%)
	RESONANCE	2.3797E-01	2.1053E-01	2.2036E-01	1.6821E-01
		(4.20E-01%)	(4.10E-01%)	(4.59E-01%)	(4.10E-01%)
	THERMAL	4.3519E-02	1.1505E-01	3.7041E-02	9.9513E-02
		(1.35E+00%)	(7.69E-01%)	(1.30E+00%)	(9.63E-01%)
	1-GROUP	3.5672E-01	3.7213E-01	3.2454E-01	3.0230E-01
		(3.59E-01%)	(3.75E-01%)	(3.81E-01%)	(4.30E-01%)
FISSION	FAST	6.6262E-02	4.1456E-02	5.9149E-02	3.0797E-02
		(2.57E-01%)	(2.61E-01%)	(2.82E-01%)	(2.76E-01%)
	RESONANCE	1.3399E-01	1.1849E-01	1.2353E-01	9.4296E-02
		(4.26E-01%)	(4.03E-01%)	(4.90E-01%)	(4.30E-01%)
	THERMAL	2.9302E-02	7.5774E-02	2.4835E-02	6.5007E-02
		(1.30E+00%)	(7.46E-01%)	(1.26E+00%)	(9.36E-01%)
	1-GROUP	2.2956E-01	2.3571E-01	2.0752E-01	1.9010E-01
		(3.50E-01%)	(3.64E-01%)	(3.75E-01%)	(4.30E-01%)
PRODUCT	FAST	1.9978E-01	1.2610E-01	1.7837E-01	9.3677E-02
		(2.57E-01%)	(2.63E-01%)	(2.83E-01%)	(2.79E-01%)
	RESONANCE	3.8600E-01	3.4132E-01	3.5585E-01	2.7163E-01
		(4.26E-01%)	(4.03E-01%)	(4.90E-01%)	(4.30E-01%)
	THERMAL	8.4407E-02	2.1828E-01	7.1539E-02	1.8726E-01
		(1.30E+00%)	(7.46E-01%)	(1.26E+00%)	(9.36E-01%)
	1-GROUP	6.7018E-01	6.8569E-01	6.0577E-01	5.5258E-01
		(3.47E-01%)	(3.61E-01%)	(3.72E-01%)	(4.28E-01%)

===== TABLE V.B.V.4 REACTION RATES - VOID = 45% FOR PU240 =====

BURNUP		0 GWD/T		50 GWD/T	
VM / VF		0.6	1.1	0.6	1.1
ABSORPT	FAST	1.6236E-02	1.0773E-02	1.6519E-02	9.7512E-03
		(2.68E-01%)	(2.78E-01%)	(2.97E-01%)	(2.96E-01%)
	RESONANCE	4.1145E-02	3.4395E-02	4.2659E-02	3.3470E-02
		(7.29E-01%)	(7.48E-01%)	(6.24E-01%)	(6.37E-01%)
	THERMAL	4.2670E-02	8.6265E-02	3.7275E-02	7.7177E-02
		(1.34E+00%)	(7.70E-01%)	(1.41E+00%)	(9.07E-01%)
	1-GROUP	1.0005E-01	1.3143E-01	9.6452E-02	1.2040E-01
		(6.51E-01%)	(5.61E-01%)	(6.41E-01%)	(6.44E-01%)
FISSION	FAST	1.1223E-02	7.9153E-03	1.1449E-02	7.1658E-03
		(2.92E-01%)	(3.05E-01%)	(3.27E-01%)	(3.25E-01%)
	RESONANCE	1.1622E-03	8.1419E-04	1.2032E-03	7.5531E-04
		(5.62E-01%)	(5.83E-01%)	(6.62E-01%)	(6.34E-01%)
	THERMAL	8.5132E-06	1.7167E-05	7.4543E-06	1.5384E-05
		(1.31E+00%)	(7.52E-01%)	(1.38E+00%)	(8.89E-01%)
	1-GROUP	1.2393E-02	8.7466E-03	1.2660E-02	7.9364E-03
		(2.87E-01%)	(2.94E-01%)	(3.11E-01%)	(3.19E-01%)
PRODUCT	FAST	3.4373E-02	2.4432E-02	3.5064E-02	2.2115E-02
		(2.95E-01%)	(3.10E-01%)	(3.33E-01%)	(3.32E-01%)
	RESONANCE	3.2353E-03	2.2667E-03	3.3498E-03	2.1028E-03
		(5.62E-01%)	(5.83E-01%)	(6.62E-01%)	(6.34E-01%)
	THERMAL	2.3699E-05	4.7789E-05	2.0752E-05	4.2826E-05
		(1.31E+00%)	(7.52E-01%)	(1.38E+00%)	(8.89E-01%)
	1-GROUP	3.7631E-02	2.6747E-02	3.8435E-02	2.4261E-02
		(2.89E-01%)	(2.98E-01%)	(3.17E-01%)	(3.26E-01%)

===== TABLE V.8.V.5 REACTION RATES - VOID = 45% FOR PU241 =====

BURNUP		0 GWD/T		50 GWD/T	
VM / VF		0.6	1.1	0.6	1.1
ABSORPT	FAST	1.5539E-02	9.3952E-03	1.5962E-02	1.1658E-02
		(2.57E-01%)	(2.59E-01%)	(2.82E-01%)	(2.76E-01%)
	RESONANCE	6.6595E-02	6.4073E-02	6.8381E-02	8.0616E-02
		(4.48E-01%)	(4.56E-01%)	(5.25E-01%)	(4.43E-01%)
	THERMAL	6.7094E-03	1.6597E-02	6.5345E-03	2.3160E-02
		(1.25E+00%)	(8.29E-01%)	(1.31E+00%)	(1.01E+00%)
	1-GROUP	8.8843E-02	9.0066E-02	9.0877E-02	1.1543E-01
		(3.98E-01%)	(4.18E-01%)	(4.48E-01%)	(4.25E-01%)
FISSION	FAST	1.3471E-02	8.1906E-03	1.3838E-02	1.0163E-02
		(2.57E-01%)	(2.58E-01%)	(2.81E-01%)	(2.76E-01%)
	RESONANCE	5.0657E-02	4.8427E-02	5.2010E-02	6.0795E-02
		(4.21E-01%)	(4.31E-01%)	(4.95E-01%)	(4.21E-01%)
	THERMAL	5.1969E-03	1.2619E-02	5.0543E-03	1.7509E-02
		(1.24E+00%)	(8.29E-01%)	(1.29E+00%)	(1.01E+00%)
	1-GROUP	6.9325E-02	6.9236E-02	7.0903E-02	8.8467E-02
		(3.76E-01%)	(3.95E-01%)	(4.19E-01%)	(4.11E-01%)
PRODUCT	FAST	4.0865E-02	2.5018E-02	4.1987E-02	3.1043E-02
		(2.56E-01%)	(2.59E-01%)	(2.81E-01%)	(2.76E-01%)
	RESONANCE	1.4855E-01	1.4201E-01	1.5251E-01	1.7827E-01
		(4.21E-01%)	(4.31E-01%)	(4.95E-01%)	(4.21E-01%)
	THERMAL	1.5239E-02	3.7002E-02	1.4820E-02	5.1340E-02
		(1.24E+00%)	(8.29E-01%)	(1.29E+00%)	(1.01E+00%)
	1-GROUP	2.0465E-01	2.0402E-01	2.0932E-01	2.6066E-01
		(3.74E-01%)	(3.93E-01%)	(4.17E-01%)	(4.10E-01%)

===== TABLE V.8.V.6 REACTION RATES - VOID = 45% FOR PU242 =====

BURNUP		0 GWD/T		50 GWD/T	
VM / VF		0.6	1.1	0.6	1.1
ABSORPT	FAST	4.0013E-03	2.6867E-03	3.6636E-03	2.5326E-03
		(2.69E-01%)	(1.95E-01%)	(3.00E-01%)	(2.99E-01%)
	RESONANCE	7.3582E-03	5.9853E-03	6.8724E-03	5.8273E-03
		(9.31E-01%)	(1.10E+00%)	(1.01E+00%)	(1.11E+00%)
	THERMAL	1.1988E-02	1.9448E-02	1.1739E-02	1.8433E-02
		(2.10E+00%)	(1.55E+00%)	(2.15E+00%)	(1.63E+00%)
	1-GROUP	2.3348E-02	2.8120E-02	2.2275E-02	2.6794E-02
		(1.10E+00%)	(1.19E+00%)	(1.20E+00%)	(1.15E+00%)
FISSION	FAST	2.6560E-03	1.9133E-03	2.4385E-03	1.8037E-03
		(3.01E-01%)	(2.40E-01%)	(3.37E-01%)	(3.34E-01%)
	RESONANCE	4.4033E-05	3.2045E-05	4.1777E-05	3.0754E-05
		(1.14E+00%)	(1.15E+00%)	(1.18E+00%)	(1.11E+00%)
	THERMAL	8.8486E-06	1.4569E-05	8.5474E-06	1.3857E-05
		(1.92E+00%)	(1.47E+00%)	(2.00E+00%)	(1.46E+00%)
	1-GROUP	2.7089E-03	1.9599E-03	2.4889E-03	1.8483E-03
		(2.97E-01%)	(2.37E-01%)	(3.34E-01%)	(3.33E-01%)
PRODUCT	FAST	8.2121E-03	5.9402E-03	7.5396E-03	5.6121E-03
		(3.02E-01%)	(3.17E-01%)	(3.42E-01%)	(3.42E-01%)
	RESONANCE	1.2365E-04	8.9772E-05	1.1732E-04	8.6362E-05
		(1.14E+00%)	(1.17E+00%)	(1.18E+00%)	(1.11E+00%)
	THERMAL	2.4847E-05	4.0810E-05	2.4002E-05	3.8909E-05
		(1.92E+00%)	(1.48E+00%)	(2.00E+00%)	(1.46E+00%)
	1-GROUP	8.3607E-03	6.0708E-03	7.6810E-03	5.7374E-03
		(2.99E-01%)	(3.15E-01%)	(3.39E-01%)	(3.40E-01%)

===== TABLE V.8.V.7 REACTION RATES - VOID = 45% FOR AM241 =====

BURNUP		0 GWD/T		50 GWD/T	
VM / VF		0.6	1.1	0.6	1.1
ABSORPT	FAST	0.0000E+00	0.0000E+00	1.4590E-03	9.4311E-04
		(0.00E+00%)	(0.00E+00%)	(2.85E-01%)	(2.83E-01%)
	RESONANCE	0.0000E+00	0.0000E+00	5.1452E-03	4.7711E-03
		(0.00E+00%)	(0.00E+00%)	(4.36E-01%)	(4.66E-01%)
	THERMAL	0.0000E+00	0.0000E+00	2.5150E-03	5.5575E-03
		(0.00E+00%)	(0.00E+00%)	(1.35E+00%)	(9.24E-01%)
	1-GROUP	0.0000E+00	0.0000E+00	9.1191E-03	1.1272E-02
		(0.00E+00%)	(0.00E+00%)	(4.84E-01%)	(5.69E-01%)
FISSION	FAST	0.0000E+00	0.0000E+00	5.2124E-04	3.9409E-04
		(0.00E+00%)	(0.00E+00%)	(3.56E-01%)	(3.62E-01%)
	RESONANCE	0.0000E+00	0.0000E+00	4.0305E-05	3.6723E-05
		(0.00E+00%)	(0.00E+00%)	(4.94E-01%)	(5.57E-01%)
	THERMAL	0.0000E+00	0.0000E+00	1.1937E-05	2.7376E-05
		(0.00E+00%)	(0.00E+00%)	(1.54E+00%)	(9.74E-01%)
	1-GROUP	0.0000E+00	0.0000E+00	5.7347E-04	4.5820E-04
		(0.00E+00%)	(0.00E+00%)	(3.44E-01%)	(3.53E-01%)
PRODUCT	FAST	0.0000E+00	0.0000E+00	1.8584E-03	1.4126E-03
		(0.00E+00%)	(0.00E+00%)	(3.62E-01%)	(3.69E-01%)
	RESONANCE	0.0000E+00	0.0000E+00	1.2993E-04	1.1838E-04
		(0.00E+00%)	(0.00E+00%)	(4.94E-01%)	(5.57E-01%)
	THERMAL	0.0000E+00	0.0000E+00	3.8479E-05	8.8245E-05
		(0.00E+00%)	(0.00E+00%)	(1.54E+00%)	(9.74E-01%)
	1-GROUP	0.0000E+00	0.0000E+00	2.0269E-03	1.6192E-03
		(0.00E+00%)	(0.00E+00%)	(3.50E-01%)	(3.58E-01%)

===== TABLE V.8.V.8 REACTION RATES - VOID = 45% FOR AM243 =====

BURNUP		0 GWD/T		50 GWD/T	
VM / VF		0.6	1.1	0.6	1.1
ABSORPT	FAST	0.0000E+00	0.0000E+00	1.6870E-03	1.2042E-03
		(0.00E+00%)	(0.00E+00%)	(2.86E-01%)	(2.87E-01%)
	RESONANCE	0.0000E+00	0.0000E+00	7.6225E-03	7.8973E-03
		(0.00E+00%)	(0.00E+00%)	(5.24E-01%)	(4.59E-01%)
	THERMAL	0.0000E+00	0.0000E+00	5.8636E-03	1.1374E-02
		(0.00E+00%)	(0.00E+00%)	(1.86E+00%)	(1.32E+00%)
	1-GROUP	0.0000E+00	0.0000E+00	1.5173E-02	2.0476E-02
		(0.00E+00%)	(0.00E+00%)	(7.87E-01%)	(7.93E-01%)
FISSION	FAST	0.0000E+00	0.0000E+00	6.2201E-04	5.2114E-04
		(0.00E+00%)	(0.00E+00%)	(3.63E-01%)	(3.68E-01%)
	RESONANCE	0.0000E+00	0.0000E+00	2.3278E-05	2.4106E-05
		(0.00E+00%)	(0.00E+00%)	(5.25E-01%)	(4.64E-01%)
	THERMAL	0.0000E+00	0.0000E+00	1.6944E-05	3.2694E-05
		(0.00E+00%)	(0.00E+00%)	(1.83E+00%)	(1.31E+00%)
	1-GROUP	0.0000E+00	0.0000E+00	6.6223E-04	5.7794E-04
		(0.00E+00%)	(0.00E+00%)	(3.49E-01%)	(3.64E-01%)
PRODUCT	FAST	0.0000E+00	0.0000E+00	2.2307E-03	1.8789E-03
		(0.00E+00%)	(0.00E+00%)	(3.69E-01%)	(3.76E-01%)
	RESONANCE	0.0000E+00	0.0000E+00	7.4714E-05	7.7370E-05
		(0.00E+00%)	(0.00E+00%)	(5.25E-01%)	(4.64E-01%)
	THERMAL	0.0000E+00	0.0000E+00	5.4382E-05	1.0493E-04
		(0.00E+00%)	(0.00E+00%)	(1.83E+00%)	(1.31E+00%)
	1-GROUP	0.0000E+00	0.0000E+00	2.3599E-03	2.0612E-03
		(0.00E+00%)	(0.00E+00%)	(3.56E-01%)	(3.70E-01%)

===== TABLE V.8.V.9 REACTION RATES - VOID = 45% FOR TOTAL FISSION PRODUCTS =====

BURNUP		0 GWD/T		50 GWD/T	
VM / VF		0.6	1.1	0.6	1.1
ABSORPT	FAST	0.0000E+00	0.0000E+00	1.5797E-03	9.6747E-04
		(0.00E+00%)	(0.00E+00%)	(1.49E-01%)	(1.16E-01%)
	RESONANCE	0.0000E+00	0.0000E+00	1.9063E-02	2.1620E-02
		(0.00E+00%)	(0.00E+00%)	(6.05E-01%)	(6.77E-01%)
	THERMAL	0.0000E+00	0.0000E+00	5.0892E-03	1.0077E-02
		(0.00E+00%)	(0.00E+00%)	(1.39E+00%)	(8.76E-01%)
	1-GROUP	0.0000E+00	0.0000E+00	2.5732E-02	3.2665E-02
		(0.00E+00%)	(0.00E+00%)	(5.28E-01%)	(5.26E-01%)
FISSION	FAST	0.0000E+00	0.0000E+00	0.0000E+00	0.0000E+00
		(0.00E+00%)	(0.00E+00%)	(0.00E+00%)	(0.00E+00%)
	RESONANCE	0.0000E+00	0.0000E+00	0.0000E+00	0.0000E+00
		(0.00E+00%)	(0.00E+00%)	(0.00E+00%)	(0.00E+00%)
	THERMAL	0.0000E+00	0.0000E+00	0.0000E+00	0.0000E+00
		(0.00E+00%)	(0.00E+00%)	(0.00E+00%)	(0.00E+00%)
	1-GROUP	0.0000E+00	0.0000E+00	0.0000E+00	0.0000E+00
		(0.00E+00%)	(0.00E+00%)	(0.00E+00%)	(0.00E+00%)
PRODUCT	FAST	0.0000E+00	0.0000E+00	0.0000E+00	0.0000E+00
		(0.00E+00%)	(0.00E+00%)	(0.00E+00%)	(0.00E+00%)
	RESONANCE	0.0000E+00	0.0000E+00	0.0000E+00	0.0000E+00
		(0.00E+00%)	(0.00E+00%)	(0.00E+00%)	(0.00E+00%)
	THERMAL	0.0000E+00	0.0000E+00	0.0000E+00	0.0000E+00
		(0.00E+00%)	(0.00E+00%)	(0.00E+00%)	(0.00E+00%)
	1-GROUP	0.0000E+00	0.0000E+00	0.0000E+00	0.0000E+00
		(0.00E+00%)	(0.00E+00%)	(0.00E+00%)	(0.00E+00%)

===== TABLE V.B.VI.1 REACTION RATES - VOID = 90% FOR U-235 =====

BURNUP		0 GWD/T		50 GWD/T	
VM / VF		0.6	1.1	0.6	1.1
ABSORPT	FAST	6.0813E-03	5.1456E-03	3.1530E-03	2.7654E-03
		(2.67E-01%)	(2.64E-01%)	(2.99E-01%)	(2.76E-01%)
	RESONANCE	7.5186E-03	1.0530E-02	4.0546E-03	6.0841E-03
		(5.18E-01%)	(5.17E-01%)	(4.91E-01%)	(5.28E-01%)
	THERMAL	5.9803E-05	2.3612E-04	3.0418E-05	1.2975E-04
		(4.52E+00%)	(2.61E+00%)	(4.37E+00%)	(2.66E+00%)
	1-GROUP	1.3660E-02	1.5912E-02	7.2381E-03	8.9792E-03
		(3.61E-01%)	(3.85E-01%)	(3.59E-01%)	(4.10E-01%)
FISSION	FAST	4.8718E-03	4.1445E-03	2.5256E-03	2.2267E-03
		(2.63E-01%)	(2.60E-01%)	(2.87E-01%)	(2.73E-01%)
	RESONANCE	5.1105E-03	6.9626E-03	2.7545E-03	4.0148E-03
		(5.00E-01%)	(4.89E-01%)	(4.81E-01%)	(4.99E-01%)
	THERMAL	4.2172E-05	1.7059E-04	2.1674E-05	9.4153E-05
		(4.47E+00%)	(2.50E+00%)	(4.28E+00%)	(2.57E+00%)
	1-GROUP	1.0025E-02	1.1278E-02	5.3018E-03	6.3357E-03
		(3.40E-01%)	(3.55E-01%)	(3.45E-01%)	(3.78E-01%)
PRODUCT	FAST	1.2098E-02	1.0327E-02	6.2721E-03	5.5481E-03
		(2.62E-01%)	(2.60E-01%)	(2.85E-01%)	(2.72E-01%)
	RESONANCE	1.2413E-02	1.6911E-02	6.6901E-03	9.7510E-03
		(5.00E-01%)	(4.89E-01%)	(4.81E-01%)	(4.99E-01%)
	THERMAL	1.0242E-04	4.1432E-04	5.2639E-05	2.2867E-04
		(4.47E+00%)	(2.50E+00%)	(4.28E+00%)	(2.57E+00%)
	1-GROUP	2.4613E-02	2.7652E-02	1.3015E-02	1.5528E-02
		(3.39E-01%)	(3.53E-01%)	(3.43E-01%)	(3.76E-01%)

===== TABLE V.B.VI.2 REACTION RATES - VOID = 90% FOR U-238 =====

BURNUP		0 GWD/T		50 GWD/T	
VM / VF		0.6	1.1	0.6	1.1
ABSORPT	FAST	2.7926E-01	2.4402E-01	2.7119E-01	2.4011E-01
		(2.62E-01%)	(2.65E-01%)	(2.88E-01%)	(2.77E-01%)
	RESONANCE	2.0518E-01	2.3554E-01	2.0738E-01	2.4638E-01
		(4.63E-01%)	(3.81E-01%)	(5.06E-01%)	(4.67E-01%)
	THERMAL	2.9687E-04	1.0697E-03	2.5539E-04	1.0387E-03
		(4.21E+00%)	(2.49E+00%)	(3.95E+00%)	(2.44E+00%)
	1-GROUP	4.8473E-01	4.8063E-01	4.7883E-01	4.8752E-01
		(3.01E-01%)	(2.78E-01%)	(3.34E-01%)	(3.21E-01%)
FISSION	FAST	6.6663E-02	6.7980E-02	6.4831E-02	6.6751E-02
		(3.92E-01%)	(3.88E-01%)	(4.10E-01%)	(4.23E-01%)
	RESONANCE	3.3479E-05	3.6105E-05	3.2974E-05	3.8221E-05
		(2.61E+00%)	(3.00E+00%)	(2.78E+00%)	(2.66E+00%)
	THERMAL	2.5838E-10	9.5612E-10	2.2300E-10	9.2749E-10
		(4.15E+00%)	(2.41E+00%)	(3.88E+00%)	(2.34E+00%)
	1-GROUP	6.6697E-02	6.8016E-02	6.4863E-02	6.6789E-02
		(3.92E-01%)	(3.88E-01%)	(4.10E-01%)	(4.23E-01%)
PRODUCT	FAST	1.8571E-01	1.9019E-01	1.8060E-01	1.8673E-01
		(3.99E-01%)	(3.99E-01%)	(4.26E-01%)	(4.31E-01%)
	RESONANCE	7.7664E-05	8.3756E-05	7.6493E-05	8.8665E-05
		(2.61E+00%)	(3.00E+00%)	(2.78E+00%)	(2.66E+00%)
	THERMAL	5.9933E-10	2.2178E-09	5.1725E-10	2.1513E-09
		(4.15E+00%)	(2.41E+00%)	(3.88E+00%)	(2.34E+00%)
	1-GROUP	1.8579E-01	1.9027E-01	1.8067E-01	1.8682E-01
		(3.99E-01%)	(3.99E-01%)	(4.26E-01%)	(4.30E-01%)

===== TABLE V.B.VI.3 REACTION RATES - VOID = 90% FOR PU239 =====

BURNUP		0 GWD/T		50 GWD/T	
VM / VF		0.6	1.1	0.6	1.1
ABSORPT	FAST	1.5624E-01	1.1554E-01	1.4079E-01	8.7416E-02
		(2.59E-01%)	(2.55E-01%)	(2.81E-01%)	(2.70E-01%)
	RESONANCE	1.6227E-01	1.9564E-01	1.5304E-01	1.6401E-01
		(5.10E-01%)	(4.55E-01%)	(5.65E-01%)	(4.81E-01%)
	THERMAL	1.6679E-03	7.0464E-03	1.5919E-03	6.3289E-03
		(5.89E+00%)	(3.02E+00%)	(5.44E+00%)	(3.18E+00%)
	1-GROUP	3.2018E-01	3.1822E-01	2.9543E-01	2.5776E-01
		(3.38E-01%)	(3.41E-01%)	(3.78E-01%)	(3.80E-01%)
FISSION	FAST	1.3392E-01	9.9701E-02	1.2064E-01	7.5401E-02
		(2.56E-01%)	(2.55E-01%)	(2.79E-01%)	(2.68E-01%)
	RESONANCE	8.9978E-02	1.0935E-01	8.4978E-02	9.1126E-02
		(5.29E-01%)	(4.74E-01%)	(5.74E-01%)	(5.01E-01%)
	THERMAL	1.2246E-03	4.9970E-03	1.1435E-03	4.3814E-03
		(5.39E+00%)	(2.81E+00%)	(5.02E+00%)	(2.94E+00%)
	1-GROUP	2.2511E-01	2.1405E-01	2.0677E-01	1.7091E-01
		(3.13E-01%)	(3.25E-01%)	(3.47E-01%)	(3.60E-01%)
PRODUCT	FAST	3.9765E-01	2.9733E-01	3.5826E-01	2.2486E-01
		(2.55E-01%)	(2.54E-01%)	(2.78E-01%)	(2.68E-01%)
	RESONANCE	2.5921E-01	3.1502E-01	2.4480E-01	2.6250E-01
		(5.29E-01%)	(4.74E-01%)	(5.74E-01%)	(5.01E-01%)
	THERMAL	3.5276E-03	1.4395E-02	3.2940E-03	1.2621E-02
		(5.39E+00%)	(2.81E+00%)	(5.02E+00%)	(2.94E+00%)
	1-GROUP	6.6039E-01	6.2675E-01	6.0636E-01	4.9999E-01
		(3.11E-01%)	(3.23E-01%)	(3.44E-01%)	(3.57E-01%)

===== TABLE V.B.VI.4 REACTION RATES - VOID = 90% FOR PU240 =====

BURNUP		0 GWD/T		50 GWD/T	
VM / VF		0.6	1.1	0.6	1.1
ABSORPT	FAST	2.8744E-02	2.2170E-02	2.9492E-02	2.0429E-02
		(2.57E-01%)	(2.54E-01%)	(2.79E-01%)	(2.74E-01%)
	RESONANCE	2.9920E-02	3.5269E-02	3.1668E-02	3.5843E-02
		(7.26E-01%)	(7.19E-01%)	(7.58E-01%)	(6.66E-01%)
	THERMAL	2.1944E-03	9.2119E-03	1.8757E-03	7.9504E-03
		(6.27E+00%)	(2.66E+00%)	(6.84E+00%)	(2.78E+00%)
	1-GROUP	6.0858E-02	6.6651E-02	6.3035E-02	6.4222E-02
		(5.03E-01%)	(5.97E-01%)	(4.97E-01%)	(5.85E-01%)
FISSION	FAST	1.6395E-02	1.3402E-02	1.6828E-02	1.2333E-02
		(2.84E-01%)	(2.77E-01%)	(3.04E-01%)	(3.07E-01%)
	RESONANCE	1.4233E-03	1.3623E-03	1.4977E-03	1.3219E-03
		(7.63E-01%)	(6.68E-01%)	(7.20E-01%)	(6.00E-01%)
	THERMAL	4.4666E-07	1.8529E-06	3.8330E-07	1.6029E-06
		(6.06E+00%)	(2.61E+00%)	(6.55E+00%)	(2.70E+00%)
	1-GROUP	1.7819E-02	1.4766E-02	1.8326E-02	1.3656E-02
		(2.84E-01%)	(2.75E-01%)	(3.00E-01%)	(2.98E-01%)
PRODUCT	FAST	4.9599E-02	4.0754E-02	5.0913E-02	3.7501E-02
		(2.86E-01%)	(2.79E-01%)	(3.07E-01%)	(3.09E-01%)
	RESONANCE	3.9627E-03	3.7925E-03	4.1699E-03	3.6802E-03
		(7.63E-01%)	(6.68E-01%)	(7.20E-01%)	(6.00E-01%)
	THERMAL	1.2435E-06	5.1580E-06	1.0671E-06	4.4620E-06
		(6.06E+00%)	(2.61E+00%)	(6.55E+00%)	(2.70E+00%)
	1-GROUP	5.3563E-02	4.4552E-02	5.5084E-02	4.1186E-02
		(2.85E-01%)	(2.77E-01%)	(3.01E-01%)	(3.01E-01%)

===== TABLE V.B.VI.5 REACTION RATES - VOID = 90% FOR PU241 =====

BURNUP		0 GWD/T		50 GWD/T	
VM / VF		0.6	1.1	0.6	1.1
ABSORPT	FAST	3.4048E-02	2.4837E-02	3.5336E-02	3.1413E-02
		(2.65E-01%)	(2.61E-01%)	(2.87E-01%)	(2.76E-01%)
	RESONANCE	3.8595E-02	4.8988E-02	4.1514E-02	6.5215E-02
		(5.67E-01%)	(5.39E-01%)	(5.41E-01%)	(5.39E-01%)
	THERMAL	4.0072E-04	1.3915E-03	4.0311E-04	1.9177E-03
		(4.37E+00%)	(2.69E+00%)	(4.51E+00%)	(2.52E+00%)
	1-GROUP	7.3044E-02	7.5217E-02	7.7252E-02	9.8546E-02
		(3.74E-01%)	(3.97E-01%)	(3.73E-01%)	(4.15E-01%)
FISSION	FAST	2.9215E-02	2.1369E-02	3.0318E-02	2.7023E-02
		(2.63E-01%)	(2.60E-01%)	(2.86E-01%)	(2.74E-01%)
	RESONANCE	3.0010E-02	3.7769E-02	3.2273E-02	5.0326E-02
		(5.56E-01%)	(5.27E-01%)	(5.31E-01%)	(5.30E-01%)
	THERMAL	3.2505E-04	1.1151E-03	3.2444E-04	1.5176E-03
		(4.30E+00%)	(2.65E+00%)	(4.39E+00%)	(2.47E+00%)
	1-GROUP	5.9550E-02	6.0252E-02	6.2914E-02	7.8866E-02
		(3.61E-01%)	(3.81E-01%)	(3.61E-01%)	(4.01E-01%)
PRODUCT	FAST	8.7596E-02	6.4268E-02	9.0905E-02	8.1271E-02
		(2.62E-01%)	(2.59E-01%)	(2.85E-01%)	(2.73E-01%)
	RESONANCE	8.8004E-02	1.1076E-01	9.4641E-02	1.4758E-01
		(5.56E-01%)	(5.27E-01%)	(5.31E-01%)	(5.30E-01%)
	THERMAL	9.5315E-04	3.2696E-03	9.5135E-04	4.4502E-03
		(4.30E+00%)	(2.65E+00%)	(4.39E+00%)	(2.47E+00%)
	1-GROUP	1.7656E-01	1.7829E-01	1.8650E-01	2.3329E-01
		(3.59E-01%)	(3.78E-01%)	(3.58E-01%)	(4.00E-01%)

===== TABLE V.B.VI.6 REACTION RATES - VOID = 90% FOR PU242 =====

BURNUP		0 GWD/T		50 GWD/T	
VM / VF		0.6	1.1	0.6	1.1
ABSORPT	FAST	6.9600E-03	5.4176E-03	6.4254E-03	5.1917E-03
		(2.60E-01%)	(1.56E-01%)	(2.80E-01%)	(2.76E-01%)
	RESONANCE	6.2329E-03	6.9789E-03	5.9651E-03	7.1898E-03
		(7.79E-01%)	(8.30E-01%)	(8.06E-01%)	(8.75E-01%)
	THERMAL	1.0281E-03	3.8436E-03	1.2643E-03	3.6579E-03
		(7.36E+00%)	(4.32E+00%)	(7.22E+00%)	(4.41E+00%)
	1-GROUP	1.4221E-02	1.6240E-02	1.3655E-02	1.6039E-02
		(6.80E-01%)	(1.11E+00%)	(7.77E-01%)	(1.10E+00%)
FISSION	FAST	3.6753E-03	3.0694E-03	3.3949E-03	2.9368E-03
		(2.99E-01%)	(2.05E-01%)	(3.18E-01%)	(3.23E-01%)
	RESONANCE	5.1892E-05	5.1690E-05	5.0199E-05	5.2065E-05
		(1.13E+00%)	(1.36E+00%)	(1.16E+00%)	(1.06E+00%)
	THERMAL	7.5493E-07	2.7927E-06	9.0112E-07	2.6565E-06
		(6.83E+00%)	(4.04E+00%)	(6.84E+00%)	(4.14E+00%)
	1-GROUP	3.7279E-03	3.1239E-03	3.4460E-03	2.9915E-03
		(2.97E-01%)	(2.01E-01%)	(3.17E-01%)	(3.20E-01%)
PRODUCT	FAST	1.1265E-02	9.4109E-03	1.0406E-02	9.0392E-03
		(3.01E-01%)	(2.91E-01%)	(3.20E-01%)	(3.25E-01%)
	RESONANCE	1.4573E-04	1.4460E-04	1.4097E-04	1.4620E-04
		(1.13E+00%)	(1.38E+00%)	(1.16E+00%)	(1.06E+00%)
	THERMAL	2.1198E-06	7.8113E-06	2.5304E-06	7.4594E-06
		(6.83E+00%)	(4.05E+00%)	(6.84E+00%)	(4.14E+00%)
	1-GROUP	1.1413E-02	9.5633E-03	1.0550E-02	9.1929E-03
		(3.00E-01%)	(2.88E-01%)	(3.19E-01%)	(3.21E-01%)

===== TABLE V.B.VI.7 REACTION RATES - VOID = 90% FOR AM241 =====

BURNUP		0 GWD/T		50 GWD/T	
VM / VF		0.6	1.1	0.6	1.1
ABSORPT	FAST	0.0000E+00	0.0000E+00	3.0595E-03	2.3546E-03
		(0.00E+00%)	(0.00E+00%)	(2.86E-01%)	(2.72E-01%)
	RESONANCE	0.0000E+00	0.0000E+00	3.7609E-03	4.7969E-03
		(0.00E+00%)	(0.00E+00%)	(5.41E-01%)	(4.69E-01%)
	THERMAL	0.0000E+00	0.0000E+00	1.7203E-04	6.8463E-04
		(0.00E+00%)	(0.00E+00%)	(6.30E+00%)	(2.95E+00%)
	1-GROUP	0.0000E+00	0.0000E+00	6.9923E-03	7.8361E-03
		(0.00E+00%)	(0.00E+00%)	(3.86E-01%)	(4.72E-01%)
FISSION	FAST	0.0000E+00	0.0000E+00	6.9192E-04	6.0664E-04
		(0.00E+00%)	(0.00E+00%)	(3.32E-01%)	(3.42E-01%)
	RESONANCE	0.0000E+00	0.0000E+00	3.2715E-05	3.9710E-05
		(0.00E+00%)	(0.00E+00%)	(5.47E-01%)	(4.81E-01%)
	THERMAL	0.0000E+00	0.0000E+00	7.3089E-07	3.1104E-06
		(0.00E+00%)	(0.00E+00%)	(7.05E+00%)	(3.06E+00%)
	1-GROUP	0.0000E+00	0.0000E+00	7.2537E-04	6.4946E-04
		(0.00E+00%)	(0.00E+00%)	(3.23E-01%)	(3.31E-01%)
PRODUCT	FAST	0.0000E+00	0.0000E+00	2.4510E-03	2.1569E-03
		(0.00E+00%)	(0.00E+00%)	(3.36E-01%)	(3.44E-01%)
	RESONANCE	0.0000E+00	0.0000E+00	1.0547E-04	1.2801E-04
		(0.00E+00%)	(0.00E+00%)	(5.47E-01%)	(4.81E-01%)
	THERMAL	0.0000E+00	0.0000E+00	2.3560E-06	1.0026E-05
		(0.00E+00%)	(0.00E+00%)	(7.05E+00%)	(3.06E+00%)
	1-GROUP	0.0000E+00	0.0000E+00	2.5588E-03	2.2950E-03
		(0.00E+00%)	(0.00E+00%)	(3.27E-01%)	(3.34E-01%)

===== TABLE V.B.VI.8 REACTION RATES - VOID = 90% FOR AM243 =====

BURNUP		0 GWD/T		50 GWD/T	
VM / VF		0.6	1.1	0.6	1.1
ABSORPT	FAST	0.0000E+00	0.0000E+00	3.5495E-03	3.0005E-03
		(0.00E+00%)	(0.00E+00%)	(2.90E-01%)	(2.75E-01%)
	RESONANCE	0.0000E+00	0.0000E+00	5.2166E-03	7.5903E-03
		(0.00E+00%)	(0.00E+00%)	(5.76E-01%)	(5.19E-01%)
	THERMAL	0.0000E+00	0.0000E+00	4.5642E-04	1.9921E-03
		(0.00E+00%)	(0.00E+00%)	(6.90E+00%)	(3.82E+00%)
	1-GROUP	0.0000E+00	0.0000E+00	9.2225E-03	1.2583E-02
		(0.00E+00%)	(0.00E+00%)	(5.26E-01%)	(7.68E-01%)
FISSION	FAST	0.0000E+00	0.0000E+00	8.1084E-04	7.8652E-04
		(0.00E+00%)	(0.00E+00%)	(3.39E-01%)	(3.51E-01%)
	RESONANCE	0.0000E+00	0.0000E+00	1.5930E-05	2.3185E-05
		(0.00E+00%)	(0.00E+00%)	(5.80E-01%)	(5.22E-01%)
	THERMAL	0.0000E+00	0.0000E+00	1.3366E-06	5.7698E-06
		(0.00E+00%)	(0.00E+00%)	(6.71E+00%)	(3.76E+00%)
	1-GROUP	0.0000E+00	0.0000E+00	8.2811E-04	8.1548E-04
		(0.00E+00%)	(0.00E+00%)	(3.34E-01%)	(3.48E-01%)
PRODUCT	FAST	0.0000E+00	0.0000E+00	2.8912E-03	2.8151E-03
		(0.00E+00%)	(0.00E+00%)	(3.44E-01%)	(3.52E-01%)
	RESONANCE	0.0000E+00	0.0000E+00	5.1132E-05	7.4413E-05
		(0.00E+00%)	(0.00E+00%)	(5.80E-01%)	(5.22E-01%)
	THERMAL	0.0000E+00	0.0000E+00	4.2899E-06	1.8518E-05
		(0.00E+00%)	(0.00E+00%)	(6.71E+00%)	(3.76E+00%)
	1-GROUP	0.0000E+00	0.0000E+00	2.9466E-03	2.9080E-03
		(0.00E+00%)	(0.00E+00%)	(3.39E-01%)	(3.50E-01%)

===== TABLE V.B.VI.9 REACTION RATES - VOID = 90% FOR TOTAL FISSION PRODUCTS =====

BURNUP		0 GWD/T		50 GWD/T	
VM / VF		0.6	1.1	0.6	1.1
ABSORPT	FAST	0.0000E+00	0.0000E+00	3.9890E-03	3.0763E-03
		(0.00E+00%)	(0.00E+00%)	(1.59E-01%)	(1.20E-01%)
	RESONANCE	0.0000E+00	0.0000E+00	9.8233E-03	1.3914E-02
		(0.00E+00%)	(0.00E+00%)	(5.72E-01%)	(6.49E-01%)
	THERMAL	0.0000E+00	0.0000E+00	2.8189E-04	1.1340E-03
		(0.00E+00%)	(0.00E+00%)	(6.39E+00%)	(2.74E+00%)
	1-GROUP	0.0000E+00	0.0000E+00	1.4094E-02	1.8125E-02
		(0.00E+00%)	(0.00E+00%)	(4.29E-01%)	(5.34E-01%)
FISSION	FAST	0.0000E+00	0.0000E+00	0.0000E+00	0.0000E+00
		(0.00E+00%)	(0.00E+00%)	(0.00E+00%)	(0.00E+00%)
	RESONANCE	0.0000E+00	0.0000E+00	0.0000E+00	0.0000E+00
		(0.00E+00%)	(0.00E+00%)	(0.00E+00%)	(0.00E+00%)
	THERMAL	0.0000E+00	0.0000E+00	0.0000E+00	0.0000E+00
		(0.00E+00%)	(0.00E+00%)	(0.00E+00%)	(0.00E+00%)
	1-GROUP	0.0000E+00	0.0000E+00	0.0000E+00	0.0000E+00
		(0.00E+00%)	(0.00E+00%)	(0.00E+00%)	(0.00E+00%)
PRODUCT	FAST	0.0000E+00	0.0000E+00	0.0000E+00	0.0000E+00
		(0.00E+00%)	(0.00E+00%)	(0.00E+00%)	(0.00E+00%)
	RESONANCE	0.0000E+00	0.0000E+00	0.0000E+00	0.0000E+00
		(0.00E+00%)	(0.00E+00%)	(0.00E+00%)	(0.00E+00%)
	THERMAL	0.0000E+00	0.0000E+00	0.0000E+00	0.0000E+00
		(0.00E+00%)	(0.00E+00%)	(0.00E+00%)	(0.00E+00%)
	1-GROUP	0.0000E+00	0.0000E+00	0.0000E+00	0.0000E+00
		(0.00E+00%)	(0.00E+00%)	(0.00E+00%)	(0.00E+00%)

===== TABLE V.B.VII.1 REACTION RATES - VOID = 99% FOR U-235 =====

BURNUP		0 GWD/T		50 GWD/T	
VM / VF		0.6	1.1	0.6	1.1
ABSORPT	FAST	8.6427E-03	9.1118E-03	4.5221E-03	4.9946E-03
		(2.69E-01%)	(3.10E-01%)	(3.07E-01%)	(2.63E-01%)
	RESONANCE	4.0053E-03	4.6205E-03	2.2136E-03	2.7859E-03
		(5.75E-01%)	(7.41E-01%)	(6.67E-01%)	(5.34E-01%)
	THERMAL	2.3308E-06	7.9756E-06	7.8836E-07	1.6565E-06
		(2.24E+01%)	(1.49E+01%)	(3.02E+01%)	(2.10E+01%)
	1-GROUP	1.2651E-02	1.3740E-02	6.7364E-03	7.7821E-03
		(3.17E-01%)	(3.95E-01%)	(3.62E-01%)	(3.16E-01%)
FISSION	FAST	6.8482E-03	7.2111E-03	3.5806E-03	3.9479E-03
		(2.67E-01%)	(3.07E-01%)	(3.03E-01%)	(2.60E-01%)
	RESONANCE	2.8387E-03	3.2529E-03	1.5672E-03	1.9596E-03
		(5.68E-01%)	(7.34E-01%)	(6.57E-01%)	(5.25E-01%)
	THERMAL	1.6668E-06	5.4260E-06	5.3617E-07	1.2314E-06
		(2.21E+01%)	(1.44E+01%)	(2.87E+01%)	(2.13E+01%)
	1-GROUP	9.6885E-03	1.0469E-02	5.1484E-03	5.9088E-03
		(3.08E-01%)	(3.80E-01%)	(3.50E-01%)	(3.05E-01%)
PRODUCT	FAST	1.6931E-02	1.7830E-02	8.8510E-03	9.7583E-03
		(2.66E-01%)	(3.06E-01%)	(3.02E-01%)	(2.59E-01%)
	RESONANCE	6.8950E-03	7.9012E-03	3.8067E-03	4.7598E-03
		(5.68E-01%)	(7.34E-01%)	(6.57E-01%)	(5.25E-01%)
	THERMAL	4.0479E-06	1.3178E-05	1.3021E-06	2.9906E-06
		(2.21E+01%)	(1.44E+01%)	(2.87E+01%)	(2.13E+01%)
	1-GROUP	2.3830E-02	2.5744E-02	1.2659E-02	1.4521E-02
		(3.06E-01%)	(3.77E-01%)	(3.48E-01%)	(3.03E-01%)

===== TABLE V.B.VII.2 REACTION RATES - VOID = 99% FOR U-238 =====

BURNUP		0 GWD/T		50 GWD/T	
VM / VF		0.6	1.1	0.6	1.1
ABSORPT	FAST	3.8491E-01	4.0714E-01	3.7686E-01	4.0860E-01
		(2.68E-01%)	(3.09E-01%)	(3.02E-01%)	(2.67E-01%)
	RESONANCE	1.3973E-01	1.4855E-01	1.4385E-01	1.6117E-01
		(5.51E-01%)	(6.59E-01%)	(6.26E-01%)	(5.12E-01%)
	THERMAL	1.2462E-05	4.0168E-05	7.9938E-06	1.4642E-05
		(2.29E+01%)	(1.48E+01%)	(2.80E+01%)	(1.89E+01%)
	1-GROUP	5.2465E-01	5.5573E-01	5.2072E-01	5.6978E-01
		(3.00E-01%)	(3.52E-01%)	(3.37E-01%)	(2.94E-01%)
FISSION	FAST	7.0070E-02	7.4046E-02	6.7781E-02	7.2741E-02
		(4.16E-01%)	(4.07E-01%)	(3.83E-01%)	(4.21E-01%)
	RESONANCE	2.1619E-05	2.3477E-05	2.2286E-05	2.5520E-05
		(3.24E+00%)	(3.22E+00%)	(3.35E+00%)	(3.64E+00%)
	THERMAL	9.9980E-12	3.5001E-11	6.7708E-12	1.3583E-11
		(2.20E+01%)	(1.46E+01%)	(2.79E+01%)	(1.82E+01%)
	1-GROUP	7.0092E-02	7.4069E-02	6.7804E-02	7.2767E-02
		(4.16E-01%)	(4.07E-01%)	(3.83E-01%)	(4.21E-01%)
PRODUCT	FAST	1.9506E-01	2.0695E-01	1.8865E-01	2.0314E-01
		(4.21E-01%)	(4.14E-01%)	(3.91E-01%)	(4.35E-01%)
	RESONANCE	5.0153E-05	5.4466E-05	5.1702E-05	5.9203E-05
		(3.24E+00%)	(3.22E+00%)	(3.35E+00%)	(3.64E+00%)
	THERMAL	2.3192E-11	8.1185E-11	1.5705E-11	3.1506E-11
		(2.20E+01%)	(1.46E+01%)	(2.79E+01%)	(1.82E+01%)
	1-GROUP	1.9511E-01	2.0701E-01	1.8870E-01	2.0320E-01
		(4.21E-01%)	(4.14E-01%)	(3.91E-01%)	(4.35E-01%)

===== TABLE V.8.VII.3 REACTION RATES - VOID = 99% FOR PU239 =====

BURNUP		0 GWD/T		50 GWD/T	
VM / VF		0.6	1.1	0.6	1.1
ABSORPT	FAST	2.1496E-01	1.9433E-01	1.9515E-01	1.4957E-01
		(2.64E-01%)	(3.02E-01%)	(2.96E-01%)	(2.56E-01%)
	RESONANCE	8.1601E-02	8.1539E-02	7.8737E-02	7.0285E-02
		(5.98E-01%)	(7.64E-01%)	(6.76E-01%)	(5.67E-01%)
	THERMAL	3.4474E-05	1.3916E-04	2.3021E-05	8.3075E-05
		(3.05E+01%)	(1.56E+01%)	(2.62E+01%)	(2.36E+01%)
	1-GROUP	2.9660E-01	2.7600E-01	2.7391E-01	2.1994E-01
		(3.01E-01%)	(3.76E-01%)	(3.37E-01%)	(3.06E-01%)
FISSION	FAST	1.8155E-01	1.6383E-01	1.6464E-01	1.2583E-01
		(2.62E-01%)	(2.98E-01%)	(2.92E-01%)	(2.54E-01%)
	RESONANCE	4.5127E-02	4.5303E-02	4.3636E-02	3.8898E-02
		(6.02E-01%)	(7.66E-01%)	(6.71E-01%)	(5.87E-01%)
	THERMAL	2.8237E-05	1.0769E-04	1.8909E-05	5.8729E-05
		(2.74E+01%)	(1.45E+01%)	(2.60E+01%)	(2.16E+01%)
	1-GROUP	2.2670E-01	2.0923E-01	2.0830E-01	1.6479E-01
		(2.83E-01%)	(3.41E-01%)	(3.13E-01%)	(2.84E-01%)
PRODUCT	FAST	5.3601E-01	4.8379E-01	4.8602E-01	3.7146E-01
		(2.62E-01%)	(2.97E-01%)	(2.90E-01%)	(2.53E-01%)
	RESONANCE	1.3001E-01	1.3051E-01	1.2571E-01	1.1206E-01
		(6.02E-01%)	(7.66E-01%)	(6.71E-01%)	(5.87E-01%)
	THERMAL	8.1338E-05	3.1021E-04	5.4468E-05	1.6918E-04
		(2.74E+01%)	(1.45E+01%)	(2.60E+01%)	(2.16E+01%)
	1-GROUP	6.6610E-01	6.1462E-01	6.1179E-01	4.8369E-01
		(2.81E-01%)	(3.38E-01%)	(3.11E-01%)	(2.83E-01%)

===== TABLE V.8.VII.4 REACTION RATES - VOID = 99% FOR PU240 =====

BURNUP		0 GWD/T		50 GWD/T	
VM / VF		0.6	1.1	0.6	1.1
ABSORPT	FAST	3.7103E-02	3.3548E-02	3.8248E-02	3.1386E-02
		(2.68E-01%)	(3.02E-01%)	(2.89E-01%)	(2.61E-01%)
	RESONANCE	1.4838E-02	1.4808E-02	1.6192E-02	1.5352E-02
		(6.83E-01%)	(8.31E-01%)	(7.75E-01%)	(7.25E-01%)
	THERMAL	3.9023E-05	2.1030E-04	5.4251E-05	1.0033E-04
		(4.17E+01%)	(2.10E+01%)	(4.15E+01%)	(2.28E+01%)
	1-GROUP	5.1980E-02	4.8565E-02	5.4494E-02	4.6839E-02
		(3.16E-01%)	(3.90E-01%)	(3.56E-01%)	(3.50E-01%)
FISSION	FAST	1.8639E-02	1.6702E-02	1.9110E-02	1.5446E-02
		(3.01E-01%)	(3.23E-01%)	(3.00E-01%)	(2.94E-01%)
	RESONANCE	9.8023E-04	8.8747E-04	1.0689E-03	9.0966E-04
		(9.13E-01%)	(1.01E+00%)	(9.30E-01%)	(9.77E-01%)
	THERMAL	8.3684E-09	4.3294E-08	1.1095E-08	2.0408E-08
		(3.85E+01%)	(2.01E+01%)	(3.99E+01%)	(2.23E+01%)
	1-GROUP	1.9619E-02	1.7588E-02	2.0179E-02	1.6355E-02
		(3.01E-01%)	(3.18E-01%)	(2.99E-01%)	(2.94E-01%)
PRODUCT	FAST	5.6103E-02	5.0351E-02	5.7510E-02	4.6546E-02
		(3.03E-01%)	(3.24E-01%)	(3.00E-01%)	(2.98E-01%)
	RESONANCE	2.7291E-03	2.4709E-03	2.9761E-03	2.5326E-03
		(9.13E-01%)	(1.01E+00%)	(9.30E-01%)	(9.77E-01%)
	THERMAL	2.3295E-08	1.2052E-07	3.0887E-08	5.6812E-08
		(3.85E+01%)	(2.01E+01%)	(3.99E+01%)	(2.23E+01%)
	1-GROUP	5.8832E-02	5.2822E-02	6.0485E-02	4.9078E-02
		(3.01E-01%)	(3.18E-01%)	(2.99E-01%)	(2.97E-01%)

===== TABLE V.B.VII.5 REACTION RATES - VOID = 99% FOR PU241 =====

BURNUP		0 GWD/T		50 GWD/T	
VM / VF		0.6	1.1	0.6	1.1
ABSORPT	FAST	4.8092E-02	4.3575E-02	5.0343E-02	5.6174E-02
		(2.68E-01%)	(3.08E-01%)	(3.04E-01%)	(2.61E-01%)
	RESONANCE	2.0104E-02	2.0010E-02	2.2162E-02	2.8235E-02
		(5.75E-01%)	(7.42E-01%)	(6.59E-01%)	(5.28E-01%)
	THERMAL	1.4950E-05	4.0442E-05	1.0689E-05	2.3660E-05
		(2.50E+01%)	(1.56E+01%)	(2.77E+01%)	(1.97E+01%)
	1-GROUP	6.8211E-02	6.3626E-02	7.2516E-02	8.4432E-02
		(3.13E-01%)	(3.83E-01%)	(3.53E-01%)	(3.07E-01%)
FISSION	FAST	4.1078E-02	3.7213E-02	4.2988E-02	4.7944E-02
		(2.66E-01%)	(3.06E-01%)	(3.02E-01%)	(2.60E-01%)
	RESONANCE	1.5854E-02	1.5759E-02	1.7471E-02	2.2221E-02
		(5.65E-01%)	(7.37E-01%)	(6.53E-01%)	(5.16E-01%)
	THERMAL	1.2342E-05	3.4065E-05	8.7350E-06	1.8944E-05
		(2.45E+01%)	(1.54E+01%)	(2.74E+01%)	(1.91E+01%)
	1-GROUP	5.6944E-02	5.3006E-02	6.0467E-02	7.0184E-02
		(3.06E-01%)	(3.74E-01%)	(3.45E-01%)	(3.00E-01%)
PRODUCT	FAST	1.2263E-01	1.1110E-01	1.2831E-01	1.4309E-01
		(2.66E-01%)	(3.05E-01%)	(3.01E-01%)	(2.59E-01%)
	RESONANCE	4.6498E-02	4.6217E-02	5.1237E-02	6.5169E-02
		(5.65E-01%)	(7.37E-01%)	(6.53E-01%)	(5.16E-01%)
	THERMAL	3.5192E-05	9.9890E-05	2.5613E-05	5.5548E-05
		(2.45E+01%)	(1.54E+01%)	(2.74E+01%)	(1.91E+01%)
	1-GROUP	1.6917E-01	1.5741E-01	1.7958E-01	2.0832E-01
		(3.05E-01%)	(3.71E-01%)	(3.43E-01%)	(2.98E-01%)

===== TABLE V.B.VII.6 REACTION RATES - VOID = 99% FOR PU242 =====

BURNUP		0 GWD/T		50 GWD/T	
VM / VF		0.6	1.1	0.6	1.1
ABSORPT	FAST	8.9529E-03	8.1423E-03	8.3071E-03	7.9297E-03
		(2.71E-01%)	(1.70E-01%)	(2.93E-01%)	(2.65E-01%)
	RESONANCE	3.5521E-03	3.5271E-03	3.4813E-03	3.7491E-03
		(6.95E-01%)	(8.28E-01%)	(6.51E-01%)	(7.82E-01%)
	THERMAL	4.2718E-05	1.2659E-04	2.3260E-05	1.0225E-04
		(3.05E+01%)	(2.17E+01%)	(4.64E+01%)	(2.66E+01%)
	1-GROUP	1.2548E-02	1.1796E-02	1.1812E-02	1.1781E-02
		(3.57E-01%)	(3.67E-01%)	(3.42E-01%)	(3.95E-01%)
FISSION	FAST	4.0371E-03	3.6282E-03	3.7193E-03	3.4815E-03
		(3.20E-01%)	(2.28E-01%)	(3.14E-01%)	(3.18E-01%)
	RESONANCE	3.0839E-05	3.0543E-05	3.1783E-05	3.1969E-05
		(1.32E+00%)	(1.70E+00%)	(1.55E+00%)	(1.47E+00%)
	THERMAL	3.0930E-08	9.2525E-08	1.7181E-08	7.1577E-08
		(2.90E+01%)	(2.05E+01%)	(4.30E+01%)	(2.57E+01%)
	1-GROUP	4.0680E-03	3.6588E-03	3.7512E-03	3.5136E-03
		(3.19E-01%)	(2.24E-01%)	(3.13E-01%)	(3.15E-01%)
PRODUCT	FAST	1.2338E-02	1.1068E-02	1.1365E-02	1.0657E-02
		(3.20E-01%)	(3.41E-01%)	(3.14E-01%)	(3.21E-01%)
	RESONANCE	8.6607E-05	8.5449E-05	8.9256E-05	8.9778E-05
		(1.32E+00%)	(1.72E+00%)	(1.55E+00%)	(1.47E+00%)
	THERMAL	8.6852E-08	2.5883E-07	4.8244E-08	2.0099E-07
		(2.90E+01%)	(2.05E+01%)	(4.30E+01%)	(2.57E+01%)
	1-GROUP	1.2425E-02	1.1154E-02	1.1455E-02	1.0747E-02
		(3.20E-01%)	(3.38E-01%)	(3.13E-01%)	(3.19E-01%)

===== TABLE V.B.VII.7 REACTION RATES - VOID = 99% FOR AM241 =====

BURNUP		0 GWD/T		50 GWD/T	
VM / VF		0.6	1.1	0.6	1.1
ABSORPT	FAST	0.0000E+00	0.0000E+00	4.3152E-03	4.1287E-03
		(0.00E+00%)	(0.00E+00%)	(3.04E-01%)	(2.61E-01%)
	RESONANCE	0.0000E+00	0.0000E+00	2.9965E-03	2.2750E-03
		(0.00E+00%)	(0.00E+00%)	(6.34E-01%)	(5.29E-01%)
	THERMAL	0.0000E+00	0.0000E+00	4.2272E-06	8.2143E-06
		(0.00E+00%)	(0.00E+00%)	(3.25E+01%)	(2.62E+01%)
	1-GROUP	0.0000E+00	0.0000E+00	6.4159E-03	6.4118E-03
		(0.00E+00%)	(0.00E+00%)	(3.52E-01%)	(3.15E-01%)
FISSION	FAST	0.0000E+00	0.0000E+00	7.4552E-04	6.9835E-04
		(0.00E+00%)	(0.00E+00%)	(3.25E-01%)	(3.38E-01%)
	RESONANCE	0.0000E+00	0.0000E+00	1.9426E-05	2.1342E-05
		(0.00E+00%)	(0.00E+00%)	(6.26E-01%)	(5.62E-01%)
	THERMAL	0.0000E+00	0.0000E+00	1.7875E-08	3.0834E-08
		(0.00E+00%)	(0.00E+00%)	(3.93E+01%)	(2.32E+01%)
	1-GROUP	0.0000E+00	0.0000E+00	7.6496E-04	7.1973E-04
		(0.00E+00%)	(0.00E+00%)	(3.20E-01%)	(3.32E-01%)
PRODUCT	FAST	0.0000E+00	0.0000E+00	2.6343E-03	2.4722E-03
		(0.00E+00%)	(0.00E+00%)	(3.25E-01%)	(3.43E-01%)
	RESONANCE	0.0000E+00	0.0000E+00	6.2629E-05	6.8804E-05
		(0.00E+00%)	(0.00E+00%)	(6.26E-01%)	(5.61E-01%)
	THERMAL	0.0000E+00	0.0000E+00	5.7620E-08	9.9393E-08
		(0.00E+00%)	(0.00E+00%)	(3.93E+01%)	(2.32E+01%)
	1-GROUP	0.0000E+00	0.0000E+00	2.6970E-03	2.5411E-03
		(0.00E+00%)	(0.00E+00%)	(3.21E-01%)	(3.37E-01%)

===== TABLE V.B.VII.8 REACTION RATES - VOID = 99% FOR AM243 =====

BURNUP		0 GWD/T		50 GWD/T	
VM / VF		0.6	1.1	0.6	1.1
ABSORPT	FAST	0.0000E+00	0.0000E+00	5.0550E-03	5.3317E-03
		(0.00E+00%)	(0.00E+00%)	(3.07E-01%)	(2.65E-01%)
	RESONANCE	0.0000E+00	0.0000E+00	2.8021E-03	3.3640E-03
		(0.00E+00%)	(0.00E+00%)	(6.80E-01%)	(5.72E-01%)
	THERMAL	0.0000E+00	0.0000E+00	1.0041E-05	2.4189E-05
		(0.00E+00%)	(0.00E+00%)	(5.20E+01%)	(2.29E+01%)
	1-GROUP	0.0000E+00	0.0000E+00	7.8671E-03	8.7199E-03
		(0.00E+00%)	(0.00E+00%)	(3.73E-01%)	(3.44E-01%)
FISSION	FAST	0.0000E+00	0.0000E+00	8.6483E-04	8.9113E-04
		(0.00E+00%)	(0.00E+00%)	(3.33E-01%)	(3.52E-01%)
	RESONANCE	0.0000E+00	0.0000E+00	8.5574E-06	1.0275E-05
		(0.00E+00%)	(0.00E+00%)	(6.82E-01%)	(5.72E-01%)
	THERMAL	0.0000E+00	0.0000E+00	3.0134E-08	7.2255E-08
		(0.00E+00%)	(0.00E+00%)	(5.10E+01%)	(2.29E+01%)
	1-GROUP	0.0000E+00	0.0000E+00	8.7343E-04	9.0148E-04
		(0.00E+00%)	(0.00E+00%)	(3.31E-01%)	(3.49E-01%)
PRODUCT	FAST	0.0000E+00	0.0000E+00	3.0779E-03	3.1782E-03
		(0.00E+00%)	(0.00E+00%)	(3.34E-01%)	(3.56E-01%)
	RESONANCE	0.0000E+00	0.0000E+00	2.7469E-05	3.2982E-05
		(0.00E+00%)	(0.00E+00%)	(6.82E-01%)	(5.72E-01%)
	THERMAL	0.0000E+00	0.0000E+00	9.6714E-08	2.3191E-07
		(0.00E+00%)	(0.00E+00%)	(5.10E+01%)	(2.29E+01%)
	1-GROUP	0.0000E+00	0.0000E+00	3.1054E-03	3.2115E-03
		(0.00E+00%)	(0.00E+00%)	(3.32E-01%)	(3.54E-01%)

===== TABLE V.8.VII.9 REACTION RATES - VOID = 99% FOR TOTAL FISSION PRODUCTS =====

BURNUP		0 GWD/T		50 GWD/T	
VM / VF		0.6	1.1	0.6	1.1
ABSORPT	FAST	0.0000E+00	0.0000E+00	6.0699E-03	6.0922E-03
		(0.00E+00%)	(0.00E+00%)	(1.68E-01%)	(1.20E-01%)
	RESONANCE	0.0000E+00	0.0000E+00	4.7810E-03	5.3559E-03
		(0.00E+00%)	(0.00E+00%)	(4.55E-01%)	(5.20E-01%)
	THERMAL	0.0000E+00	0.0000E+00	6.5372E-06	1.2311E-05
		(0.00E+00%)	(0.00E+00%)	(4.26E+01%)	(1.88E+01%)
	1-GROUP	0.0000E+00	0.0000E+00	1.0857E-02	1.1460E-02
		(0.00E+00%)	(0.00E+00%)	(2.46E-01%)	(2.65E-01%)
FISSION	FAST	0.0000E+00	0.0000E+00	0.0000E+00	0.0000E+00
		(0.00E+00%)	(0.00E+00%)	(0.00E+00%)	(0.00E+00%)
	RESONANCE	0.0000E+00	0.0000E+00	0.0000E+00	0.0000E+00
		(0.00E+00%)	(0.00E+00%)	(0.00E+00%)	(0.00E+00%)
	THERMAL	0.0000E+00	0.0000E+00	0.0000E+00	0.0000E+00
		(0.00E+00%)	(0.00E+00%)	(0.00E+00%)	(0.00E+00%)
	1-GROUP	0.0000E+00	0.0000E+00	0.0000E+00	0.0000E+00
		(0.00E+00%)	(0.00E+00%)	(0.00E+00%)	(0.00E+00%)
PRODUCT	FAST	0.0000E+00	0.0000E+00	0.0000E+00	0.0000E+00
		(0.00E+00%)	(0.00E+00%)	(0.00E+00%)	(0.00E+00%)
	RESONANCE	0.0000E+00	0.0000E+00	0.0000E+00	0.0000E+00
		(0.00E+00%)	(0.00E+00%)	(0.00E+00%)	(0.00E+00%)
	THERMAL	0.0000E+00	0.0000E+00	0.0000E+00	0.0000E+00
		(0.00E+00%)	(0.00E+00%)	(0.00E+00%)	(0.00E+00%)
	1-GROUP	0.0000E+00	0.0000E+00	0.0000E+00	0.0000E+00
		(0.00E+00%)	(0.00E+00%)	(0.00E+00%)	(0.00E+00%)

Appendix Ⅲ Cross-Sections and Reaction Rates (SRAC/VIM)

===== TABLE R.B.II.1 CROSS-SECTIONS FOR U-235 (SRAC/VIM) =====

BURNUP		0 GWD/T		50 GWD/T	
VM / VF		0.6	1.1	0.6	1.1
SIGMA-A	FAST	1.00387	1.00577	1.00309	1.00526
	RESONANCE	1.00744	1.00779	1.00381	1.00531
	THERMAL	1.02614	1.03354	1.01994	1.02829
	1-GROUP	1.01308	1.01102	1.01006	1.00748
SIGMA-F	FAST	1.00360	1.00554	1.00278	1.00493
	RESONANCE	1.00819	1.00726	1.00381	1.00453
	THERMAL	1.02754	1.03442	1.01906	1.02882
	1-GROUP	1.01196	1.00918	1.00843	1.00558
SIGMA-P	FAST	1.00349	1.00510	1.00263	1.00427
	RESONANCE	1.00825	1.00732	1.00382	1.00458
	THERMAL	1.02750	1.03440	1.01904	1.02879
	1-GROUP	1.01184	1.00911	1.00841	1.00551

===== TABLE R.B.II.2 CROSS-SECTIONS FOR U-238 (SRAC/VIM) =====

BURNUP		0 GWD/T		50 GWD/T	
VM / VF		0.6	1.1	0.6	1.1
SIGMA-A	FAST	1.00794	1.00802	1.00617	1.00673
	RESONANCE	1.00540	1.00812	0.99493	1.00822
	THERMAL	1.03894	1.03504	1.03747	1.03103
	1-GROUP	1.01452	1.01549	1.00634	1.01432
SIGMA-F	FAST	1.01413	1.01136	1.01129	1.00963
	RESONANCE	0.99493	0.99374	1.01737	1.02435
	THERMAL	-------	-------	-------	-------
	1-GROUP	1.01044	1.00915	1.00765	1.00788
SIGMA-P	FAST	1.01180	1.00819	1.00861	1.00515
	RESONANCE	0.99495	0.99378	1.01737	1.02438
	THERMAL	-------	-------	-------	-------
	1-GROUP	1.00814	1.00605	1.00502	1.00342

===== TABLE R.B.II.3 CROSS-SECTIONS FOR PU239 (SRAC/VIM) =====

BURNUP		0 GWD/T		50 GWD/T	
VM / VF		0.6	1.1	0.6	1.1
SIGMA-A	FAST	1.00282	1.00495	1.00205	1.00469
	RESONANCE	0.99657	0.99520	1.00053	1.00570
	THERMAL	1.02536	1.03306	1.02873	1.02182
	1-GROUP	0.99872	0.99841	1.00373	0.99727
SIGMA-F	FAST	1.00242	1.00465	1.00179	1.00448
	RESONANCE	0.99605	0.99682	0.99956	1.00299
	THERMAL	1.02502	1.03293	1.02754	1.02227
	1-GROUP	0.99708	0.99853	1.00160	0.99568
SIGMA-P	FAST	1.00243	1.00437	1.00167	1.00392
	RESONANCE	0.99597	0.99681	0.99957	1.00297
	THERMAL	1.02501	1.03288	1.02757	1.02231
	1-GROUP	0.99706	0.99854	1.00149	0.99566

===== TABLE R.B.II.4 CROSS-SECTIONS FOR PU240 (SRAC/VIM) =====

BURNUP		0 GWD/T		50 GWD/T	
VM / VF		0.6	1.1	0.6	1.1
SIGMA-A	FAST	1.00420	1.00575	1.00439	1.00675
	RESONANCE	0.98973	0.98654	0.99635	0.99943
	THERMAL	1.01939	1.01512	1.00059	0.99617
	1-GROUP	0.97964	0.97949	0.97692	0.96962
SIGMA-F	FAST	1.00368	1.00527	1.00443	1.00677
	RESONANCE	0.98532	0.97779	0.99292	0.98884
	THERMAL	1.01951	1.01556	1.00131	0.99711
	1-GROUP	0.99993	1.00185	1.00126	1.00432
SIGMA-P	FAST	1.00360	1.00459	1.00405	1.00550
	RESONANCE	0.98529	0.97780	0.99293	0.98881
	THERMAL	1.01951	1.01556	1.00129	0.99717
	1-GROUP	0.99989	1.00136	1.00087	1.00323

===== TABLE R.B.II.5 CROSS-SECTIONS FOR PU241 (SRAC/VIM) =====

BURNUP		0 GWD/T		50 GWD/T	
VM / VF		0.6	1.1	0.6	1.1
SIGMA-A	FAST	1.00333	1.00543	1.00229	1.00475
	RESONANCE	1.00224	1.00857	1.00836	1.01157
	THERMAL	1.02864	1.03748	1.02289	1.03195
	1-GROUP	1.00810	1.01081	1.01233	1.01004
SIGMA-F	FAST	1.00341	1.00537	1.00232	1.00464
	RESONANCE	1.00365	1.00837	1.00875	1.01191
	THERMAL	1.02977	1.03824	1.02349	1.03299
	1-GROUP	1.00914	1.01086	1.01246	1.01050
SIGMA-P	FAST	1.00328	1.00502	1.00218	1.00414
	RESONANCE	1.00366	1.00833	1.00872	1.01186
	THERMAL	1.02976	1.03827	1.02350	1.03297
	1-GROUP	1.00908	1.01081	1.01233	1.01042

===== TABLE R.B.II.6 CROSS-SECTIONS FOR PU242 (SRAC/VIM) =====

BURNUP		0 GWD/T		50 GWD/T	
VM / VF		0.6	1.1	0.6	1.1
SIGMA-A	FAST	1.00578	1.00682	1.00607	1.00785
	RESONANCE	0.99785	1.02499	1.01223	1.00527
	THERMAL	1.06933	1.00959	1.02416	1.02039
	1-GROUP	1.01108	0.98142	0.99120	0.98847
SIGMA-F	FAST	1.00595	1.00663	1.00666	1.00823
	RESONANCE	1.00090	0.98787	1.02218	1.00837
	THERMAL	1.06319	1.01082	1.02275	1.01969
	1-GROUP	1.00251	1.00399	1.00338	1.00632
SIGMA-P	FAST	1.00569	1.00582	1.00604	1.00671
	RESONANCE	1.00091	0.98783	1.02219	1.00840
	THERMAL	1.06318	1.01087	1.02275	1.01970
	1-GROUP	1.00221	1.00322	1.00278	1.00490

===== TABLE R.B.II.7 CROSS-SECTIONS FOR AM241 (SRAC/VIM) =====

BURNUP		0 GWD/T		50 GWD/T	
VM / VF		0.6	1.1	0.6	1.1
SIGMA-A	FAST	-------	-------	1.00545	1.00708
	RESONANCE	-------	-------	1.02295	1.03282
	THERMAL	-------	-------	0.99399	0.99178
	1-GROUP	-------	-------	0.99490	0.98477
SIGMA-F	FAST	-------	-------	1.00969	1.01084
	RESONANCE	-------	-------	1.01993	1.01954
	THERMAL	-------	-------	0.98741	0.98971
	1-GROUP	-------	-------	1.00528	1.00475
SIGMA-P	FAST	-------	-------	1.00885	1.00914
	RESONANCE	-------	-------	1.01988	1.01952
	THERMAL	-------	-------	0.98738	0.98972
	1-GROUP	-------	-------	1.00461	1.00372

===== TABLE R.B.II.8 CROSS-SECTIONS FOR AM243 (SRAC/VIM) =====

BURNUP		0 GWD/T		50 GWD/T	
VM / VF		0.6	1.1	0.6	1.1
SIGMA-A	FAST	-------	-------	1.00719	1.00877
	RESONANCE	-------	-------	0.99461	0.99516
	THERMAL	-------	-------	1.00917	1.00852
	1-GROUP	-------	-------	0.98417	0.98245
SIGMA-F	FAST	-------	-------	1.01187	1.01255
	RESONANCE	-------	-------	0.99472	0.99552
	THERMAL	-------	-------	1.01002	1.00862
	1-GROUP	-------	-------	1.00611	1.00719
SIGMA-P	FAST	-------	-------	1.01070	1.01046
	RESONANCE	-------	-------	0.99472	0.99552
	THERMAL	-------	-------	1.01001	1.00868
	1-GROUP	-------	-------	1.00528	1.00572

===== TABLE R.B.II.9 CROSS-SECTIONS FOR STRUCTURAL MATERIALS AT 0 GWD/T (SRAC/VIM) =====

SIGMA-A	3-GROUP			
	FAST	RESONANCE	THERMAL	1-GROUP
FE	0.97207	0.95695	1.04506	0.97590
CR	0.99813	1.01083	1.00376	0.99635
NI	1.00515	0.98924	0.94846	0.97795
MN-55	0.99233	0.96750	1.01625	0.97921
ZRY	0.98999	0.96657	1.06016	0.98241

===== TABLE R.8.III.1 REACTION RATES - VOID = 0% FOR U-235 (SRAC/VIM) =====

BURNUP		0 GWD/T		50 GWD/T	
VM / VF		0.6	1.1	0.6	1.1
ABSORPT	FAST	0.99787	1.00295	1.00000	1.00665
	RESONANCE	1.01978	1.01911	1.01792	1.01909
	THERMAL	0.96900	0.99052	0.97417	0.99199
	1-GROUP	1.01075	1.01027	1.01059	1.01067
FISSION	FAST	0.99762	1.00257	0.99972	1.00632
	RESONANCE	1.02058	1.01858	1.01793	1.01832
	THERMAL	0.97031	0.99136	0.97333	0.99256
	1-GROUP	1.00960	1.00838	1.00897	1.00872
PRODUCT	FAST	0.99753	1.00217	0.99955	1.00568
	RESONANCE	1.02059	1.01858	1.01796	1.01833
	THERMAL	0.97029	0.99133	0.97335	0.99253
	1-GROUP	1.00951	1.00826	1.00883	1.00857

===== TABLE R.8.III.2 REACTION RATES - VOID = 0% FOR U-238 (SRAC/VIM) =====

BURNUP		0 GWD/T		50 GWD/T	
VM / VF		0.6	1.1	0.6	1.1
ABSORPT	FAST	1.00191	1.00511	1.00309	1.00811
	RESONANCE	1.01768	1.01939	1.00895	1.02206
	THERMAL	0.98107	0.99195	0.99091	0.99469
	1-GROUP	1.01215	1.01470	1.00687	1.01750
FISSION	FAST	1.00811	1.00841	1.00818	1.01100
	RESONANCE	1.00715	1.00494	1.03170	1.03840
	THERMAL	-------	-------	-------	-------
	1-GROUP	1.00808	1.00843	1.00820	1.01099
PRODUCT	FAST	1.00574	1.00523	1.00546	1.00653
	RESONANCE	1.00710	1.00490	1.03166	1.03840
	THERMAL	-------	-------	-------	-------
	1-GROUP	1.00574	1.00523	1.00546	1.00643

===== TABLE R.8.III.3 REACTION RATES - VOID = 0% FOR PU239 (SRAC/VIM) =====

BURNUP		0 GWD/T		50 GWD/T	
VM / VF		0.6	1.1	0.6	1.1
ABSORPT	FAST	0.99679	1.00203	0.99898	1.00603
	RESONANCE	1.00879	1.00634	1.01461	1.01949
	THERMAL	0.96821	0.99008	0.98257	0.98578
	1-GROUP	0.99634	0.99765	1.00424	1.00044
FISSION	FAST	0.99644	1.00179	0.99868	1.00579
	RESONANCE	1.00817	1.00801	1.01364	1.01671
	THERMAL	0.96792	0.98989	0.98146	0.98623
	1-GROUP	0.99473	0.99773	1.00216	0.99880
PRODUCT	FAST	0.99642	1.00146	0.99858	1.00529
	RESONANCE	1.00815	1.00802	1.01360	1.01671
	THERMAL	0.96793	0.98990	0.98144	0.98627
	1-GROUP	0.99477	0.99775	1.00205	0.99877

===== TABLE R.B.III.4 REACTION RATES - VOID = 0% FOR PU240 (SRAC/VIM) =====

BURNUP		0 GWD/T		50 GWD/T	
VM / VF		0.6	1.1	0.6	1.1
ABSORPT	FAST	0.99819	1.00279	1.00130	1.00809
	RESONANCE	1.00186	0.99766	1.01037	1.01308
	THERMAL	0.96259	0.97284	0.95570	0.96101
	1-GROUP	0.97738	0.97871	0.97740	0.97266
FISSION	FAST	0.99769	1.00235	1.00136	1.00815
	RESONANCE	0.99735	0.98878	1.00690	1.00235
	THERMAL	0.96272	0.97326	0.95633	0.96194
	1-GROUP	0.99759	1.00104	1.00179	1.00744
PRODUCT	FAST	0.99767	1.00170	1.00097	1.00686
	RESONANCE	0.99738	0.98872	1.00691	1.00235
	THERMAL	0.96269	0.97327	0.95637	0.96197
	1-GROUP	0.99756	1.00055	1.00138	1.00634

===== TABLE R.B.III.5 REACTION RATES - VOID = 0% FOR PU241 (SRAC/VIM) =====

BURNUP		0 GWD/T		50 GWD/T	
VM / VF		0.6	1.1	0.6	1.1
ABSORPT	FAST	0.99728	1.00253	0.99917	1.00614
	RESONANCE	1.01452	1.01987	1.02255	1.02542
	THERMAL	0.97129	0.99429	0.97701	0.99557
	1-GROUP	1.00578	1.01003	1.01289	1.01319
FISSION	FAST	0.99741	1.00247	0.99928	1.00601
	RESONANCE	1.01595	1.01968	1.02293	1.02577
	THERMAL	0.97242	0.99506	0.97749	0.99657
	1-GROUP	1.00680	1.01007	1.01297	1.01366
PRODUCT	FAST	0.99728	1.00212	0.99910	1.00551
	RESONANCE	1.01594	1.01962	1.02296	1.02580
	THERMAL	0.97240	0.99505	0.97757	0.99656
	1-GROUP	1.00672	1.01002	1.01289	1.01358

===== TABLE R.B.III.6 REACTION RATES - VOID = 0% FOR PU242 (SRAC/VIM) =====

BURNUP		0 GWD/T		50 GWD/T	
VM / VF		0.6	1.1	0.6	1.1
ABSORPT	FAST	0.99977	1.00371	1.00301	1.00920
	RESONANCE	1.01007	1.03629	1.02644	1.01902
	THERMAL	1.00973	0.96733	0.97815	0.98437
	1-GROUP	1.00877	0.98047	0.99170	0.99157
FISSION	FAST	0.99995	1.00356	1.00357	1.00968
	RESONANCE	1.01316	0.99872	1.03655	1.02215
	THERMAL	1.00393	0.96855	0.97686	0.98377
	1-GROUP	1.00018	1.00299	1.00394	1.00956
PRODUCT	FAST	0.99968	1.00290	1.00300	1.00813
	RESONANCE	1.01316	0.99891	1.03656	1.02219
	THERMAL	1.00394	0.96877	0.97687	0.98378
	1-GROUP	0.99988	1.00251	1.00330	1.00804

===== TABLE R.B.III.7 REACTION RATES - VOID = 0% FOR AM241 (SRAC/VIM) =====

BURNUP		0 GWD/T		50 GWD/T	
VM / VF		0.6	1.1	0.6	1.1
ABSORPT	FAST	-------	-------	1.00243	1.00847
	RESONANCE	-------	-------	1.03731	1.04698
	THERMAL	-------	-------	0.94940	0.95680
	1-GROUP	-------	-------	0.99535	0.98778
FISSION	FAST	-------	-------	1.00660	1.01221
	RESONANCE	-------	-------	1.03427	1.03352
	THERMAL	-------	-------	0.94309	0.95481
	1-GROUP	-------	-------	1.00580	1.00787
PRODUCT	FAST	-------	-------	1.00580	1.01061
	RESONANCE	-------	-------	1.03426	1.03347
	THERMAL	-------	-------	0.94307	0.95482
	1-GROUP	-------	-------	1.00510	1.00690

===== TABLE R.B.III.8 REACTION RATES - VOID = 0% FOR AM243 (SRAC/VIM) =====

BURNUP		0 GWD/T		50 GWD/T	
VM / VF		0.6	1.1	0.6	1.1
ABSORPT	FAST	-------	-------	1.00411	1.01019
	RESONANCE	-------	-------	1.00862	1.00879
	THERMAL	-------	-------	0.96390	0.97306
	1-GROUP	-------	-------	0.98464	0.98555
FISSION	FAST	-------	-------	1.00876	1.01395
	RESONANCE	-------	-------	1.00872	1.00908
	THERMAL	-------	-------	0.96469	0.97313
	1-GROUP	-------	-------	1.00666	1.01035
PRODUCT	FAST	-------	-------	1.00761	1.01187
	RESONANCE	-------	-------	1.00871	1.00914
	THERMAL	-------	-------	0.96468	0.97308
	1-GROUP	-------	-------	1.00583	1.00882

===== TABLE R.B.III.9 REACTION RATES - VOID = 0% FOR TOTAL FISSION PRODUCTS (SRAC/VIM) =====

BURNUP		0 GWD/T		50 GWD/T	
VM / VF		0.6	1.1	0.6	1.1
ABSORPT	FAST	-------	-------	1.00105	1.00679
	RESONANCE	-------	-------	0.96383	0.94756
	THERMAL	-------	-------	0.97072	0.98318
	1-GROUP	-------	-------	0.96575	0.95279
FISSION	FAST	-------	-------	-------	-------
	RESONANCE	-------	-------	-------	-------
	THERMAL	-------	-------	-------	-------
	1-GROUP	-------	-------	-------	-------
PRODUCT	FAST	-------	-------	-------	-------
	RESONANCE	-------	-------	-------	-------
	THERMAL	-------	-------	-------	-------
	1-GROUP	-------	-------	-------	-------

===== TABLE R.IV ABSORPTION RATES - VOID = 0% (SRAC/VIM) =====

BURNUP		0 GWD/T		50 GWD/T	
VM / VF		0.6	1.1	0.6	1.1
TC-99	FAST	-------	-------	0.99863	1.00620
	RESONANCE	-------	-------	1.00803	0.98532
	THERMAL	-------	-------	0.93563	0.95268
	1-GROUP	-------	-------	1.00530	0.98452
RH103	FAST	-------	-------	1.00127	1.00532
	RESONANCE	-------	-------	0.91741	0.94403
	THERMAL	-------	-------	0.94590	0.95310
	1-GROUP	-------	-------	0.94263	0.95336
XE131	FAST	-------	-------	1.00244	1.00790
	RESONANCE	-------	-------	0.91541	0.84922
	THERMAL	-------	-------	1.03545	1.02509
	1-GROUP	-------	-------	0.91974	0.85899
CS133	FAST	-------	-------	1.00152	1.00700
	RESONANCE	-------	-------	0.96391	0.94415
	THERMAL	-------	-------	0.94586	0.96350
	1-GROUP	-------	-------	0.96450	0.94601
SM149	FAST	-------	-------	1.00141	1.00756
	RESONANCE	-------	-------	1.01439	1.01507
	THERMAL	-------	-------	0.99077	1.02153
	1-GROUP	-------	-------	0.99658	1.02105

===== TABLE R.B.V.1 REACTION RATES - VOID = 45% FOR U-235 (SRAC/VIM) =====

BURNUP		0 GWD/T		50 GWD/T	
VM / VF		0.6	1.1	0.6	1.1
ABSORPT	FAST	0.99971	1.00451	1.00120	1.01121
	RESONANCE	1.02141	1.02211	1.01690	1.01978
	THERMAL	0.91523	0.96480	0.91434	0.95618
	1-GROUP	1.01104	1.01185	1.00845	1.00975
FISSION	FAST	0.99933	1.00401	1.00095	1.01102
	RESONANCE	1.02006	1.02179	1.01577	1.01811
	THERMAL	0.91301	0.96530	0.91223	0.95585
	1-GROUP	1.00829	1.00975	1.00613	1.00653
PRODUCT	FAST	0.99922	1.00349	1.00089	1.01066
	RESONANCE	1.02013	1.02190	1.01579	1.01813
	THERMAL	0.91300	0.96529	0.91223	0.95587
	1-GROUP	1.00817	1.00968	1.00620	1.00654

===== TABLE R.B.V.2 REACTION RATES - VOID = 45% FOR U-238 (SRAC/VIM) =====

BURNUP		0 GWD/T		50 GWD/T	
VM / VF		0.6	1.1	0.6	1.1
ABSORPT	FAST	1.00307	1.00563	1.00508	1.01358
	RESONANCE	1.01485	1.01738	1.01706	1.01419
	THERMAL	0.93858	0.97605	0.94336	0.96909
	1-GROUP	1.00985	1.01293	1.01220	1.01324
FISSION	FAST	1.00813	1.00619	1.01241	1.01776
	RESONANCE	0.99866	0.99598	1.01023	1.02772
	THERMAL	-------	-------	-------	-------
	1-GROUP	1.00813	1.00619	1.01241	1.01775
PRODUCT	FAST	1.00549	1.00232	1.00980	1.01433
	RESONANCE	0.99868	0.99600	1.01023	1.02776
	THERMAL	-------	-------	-------	-------
	1-GROUP	1.00549	1.00232	1.00980	1.01440

===== TABLE R.B.V.3 REACTION RATES - VOID = 45% FOR PU239 (SRAC/VIM) =====

BURNUP		0 GWD/T		50 GWD/T	
VM / VF		0.6	1.1	0.6	1.1
ABSORPT	FAST	0.99851	1.00354	1.00058	1.01050
	RESONANCE	1.01567	1.01278	1.01157	1.02247
	THERMAL	0.89956	0.96541	0.91920	0.95820
	1-GROUP	0.99790	0.99694	0.99874	0.99997
FISSION	FAST	0.99814	1.00289	1.00034	1.01026
	RESONANCE	1.01164	1.01232	1.00890	1.01939
	THERMAL	0.90117	0.96526	0.91894	0.95770
	1-GROUP	0.99360	0.99555	0.99566	0.99679
PRODUCT	FAST	0.99805	1.00246	1.00039	1.00999
	RESONANCE	1.01158	1.01231	1.00891	1.01940
	THERMAL	0.90116	0.96523	0.91895	0.95771
	1-GROUP	0.99364	0.99552	0.99576	0.99685

===== TABLE R.B.V.4 REACTION RATES - VOID = 45% FOR PU240 (SRAC/VIM) =====

BURNUP		0 GWD/T		50 GWD/T	
VM / VF		0.6	1.1	0.6	1.1
ABSORPT	FAST	1.00043	1.00436	1.00254	1.01295
	RESONANCE	1.00338	1.00817	1.00159	1.00096
	THERMAL	0.91992	0.96115	0.91769	0.95925
	1-GROUP	0.96731	0.97702	0.96934	0.97517
FISSION	FAST	1.00036	1.00323	1.00271	1.01316
	RESONANCE	1.00017	0.99391	0.99119	1.00238
	THERMAL	0.91995	0.96132	0.91801	0.95918
	1-GROUP	1.00032	1.00227	1.00150	1.01202
PRODUCT	FAST	1.00006	1.00229	1.00259	1.01239
	RESONANCE	1.00025	0.99391	0.99119	1.00238
	THERMAL	0.91995	0.96131	0.91798	0.95918
	1-GROUP	1.00005	1.00150	1.00156	1.01142

===== TABLE R.B.V.5 REACTION RATES - VOID = 45% FOR PU241 (SRAC/VIM) =====

BURNUP		0 GWD/T		50 GWD/T	
VM / VF		0.6	1.1	0.6	1.1
ABSORPT	FAST	0.99916	1.00410	1.00069	1.01089
	RESONANCE	1.01655	1.01990	1.01803	1.01903
	THERMAL	0.89981	0.96216	0.90697	0.95825
	1-GROUP	1.00468	1.00759	1.00699	1.00606
FISSION	FAST	0.99918	1.00388	1.00087	1.01082
	RESONANCE	1.01747	1.01869	1.01865	1.02063
	THERMAL	0.90308	0.96307	0.90883	0.95939
	1-GROUP	1.00535	1.00680	1.00735	1.00737
PRODUCT	FAST	0.99902	1.00348	1.00074	1.01053
	RESONANCE	1.01744	1.01866	1.01869	1.02064
	THERMAL	0.90308	0.96311	0.90884	0.95945
	1-GROUP	1.00523	1.00676	1.00726	1.00733

===== TABLE R.B.V.6 REACTION RATES - VOID = 45% FOR PU242 (SRAC/VIM) =====

BURNUP		0 GWD/T		50 GWD/T	
VM / VF		0.6	1.1	0.6	1.1
ABSORPT	FAST	1.00252	1.00335	1.00431	1.01445
	RESONANCE	1.04100	1.01636	1.04568	1.02903
	THERMAL	0.99499	0.95789	0.96363	0.99539
	1-GROUP	1.01075	0.97468	0.99565	1.00448
FISSION	FAST	1.00309	1.00230	1.00541	1.01497
	RESONANCE	1.04783	1.01616	1.02391	1.02806
	THERMAL	0.98683	0.95738	0.95948	0.99011
	1-GROUP	1.00377	1.00219	1.00554	1.01504
PRODUCT	FAST	1.00257	1.00350	1.00500	1.01404
	RESONANCE	1.04780	1.01859	1.02387	1.02804
	THERMAL	0.98680	0.95969	0.95942	0.99011
	1-GROUP	1.00316	1.00339	1.00512	1.01405

===== TABLE R.B.V.7 REACTION RATES - VOID = 45% FOR AM241 (SRAC/VIM) =====

BURNUP		0 GWD/T		50 GWD/T	
VM / VF		0.6	1.1	0.6	1.1
ABSORPT	FAST	-------	-------	1.00370	1.01329
	RESONANCE	-------	-------	1.03086	1.04265
	THERMAL	-------	-------	0.92223	0.93553
	1-GROUP	-------	-------	0.99656	0.98731
FISSION	FAST	-------	-------	1.00961	1.01764
	RESONANCE	-------	-------	1.03126	1.03853
	THERMAL	-------	-------	0.91958	0.93381
	1-GROUP	-------	-------	1.00926	1.01427
PRODUCT	FAST	-------	-------	1.00899	1.01642
	RESONANCE	-------	-------	1.03117	1.03843
	THERMAL	-------	-------	0.91959	0.93383
	1-GROUP	-------	-------	1.00868	1.01353

===== TABLE R.B.V.8 REACTION RATES - VOID = 45% FOR AM243 (SRAC/VIM) =====

BURNUP		0 GWD/T		50 GWD/T	
VM / VF		0.6	1.1	0.6	1.1
ABSORPT	FAST	-------	-------	1.00575	1.01495
	RESONANCE	-------	-------	1.00094	1.00466
	THERMAL	-------	-------	0.93402	0.95613
	1-GROUP	-------	-------	0.97561	0.97832
FISSION	FAST	-------	-------	1.01210	1.01973
	RESONANCE	-------	-------	1.00112	1.00494
	THERMAL	-------	-------	0.93449	0.95641
	1-GROUP	-------	-------	1.00972	1.01552
PRODUCT	FAST	-------	-------	1.01116	1.01820
	RESONANCE	-------	-------	1.00108	1.00492
	THERMAL	-------	-------	0.93448	0.95645
	1-GROUP	-------	-------	1.00903	1.01455

===== TABLE R.B.V.9 REACTION RATES - VOID = 45% FOR TOTAL FISSION PRODUCTS (SRAC/VIM) =====

BURNUP		0 GWD/T		50 GWD/T	
VM / VF		0.6	1.1	0.6	1.1
ABSORPT	FAST	-------	-------	1.00091	1.00828
	RESONANCE	-------	-------	0.97609	0.95863
	THERMAL	-------	-------	0.92644	0.95253
	1-GROUP	-------	-------	0.96994	0.95807
FISSION	FAST	-------	-------	-------	-------
	RESONANCE	-------	-------	-------	-------
	THERMAL	-------	-------	-------	-------
	1-GROUP	-------	-------	-------	-------
PRODUCT	FAST	-------	-------	-------	-------
	RESONANCE	-------	-------	-------	-------
	THERMAL	-------	-------	-------	-------
	1-GROUP	-------	-------	-------	-------

===== TABLE R.B.VI.1 REACTION RATES - VOID = 90% FOR U-235 (SRAC/VIM) =====

BURNUP		0 GWD/T		50 GWD/T	
VM / VF		0.6	1.1	0.6	1.1
ABSORPT	FAST	0.99188	1.00278	0.99290	1.00521
	RESONANCE	1.01113	1.00513	1.00811	1.00256
	THERMAL	0.72891	0.80010	0.69347	0.78474
	1-GROUP	1.00132	1.00126	1.00014	1.00022
FISSION	FAST	0.99160	1.00236	0.99271	1.00485
	RESONANCE	1.01002	1.00490	1.00686	1.00249
	THERMAL	0.71737	0.79295	0.67403	0.77887
	1-GROUP	0.99980	1.00071	0.99874	0.99998
PRODUCT	FAST	0.99182	1.00232	0.99287	1.00483
	RESONANCE	1.01007	1.00497	1.00698	1.00256
	THERMAL	0.71736	0.79287	0.67401	0.77885
	1-GROUP	0.99988	1.00080	0.99885	1.00006

===== TABLE R.B.VI.2 REACTION RATES - VOID = 90% FOR U-238 (SRAC/VIM) =====

BURNUP		0 GWD/T		50 GWD/T	
VM / VF		0.6	1.1	0.6	1.1
ABSORPT	FAST	0.99731	1.00541	0.99878	1.00804
	RESONANCE	1.01257	1.01401	1.01201	1.01335
	THERMAL	0.74976	0.84150	0.78699	0.83357
	1-GROUP	1.00363	1.00926	1.00438	1.01036
FISSION	FAST	1.00928	1.00993	1.01410	1.01425
	RESONANCE	0.95057	0.98690	0.96901	0.96021
	THERMAL	-------	-------	-------	-------
	1-GROUP	1.00925	1.00992	1.01407	1.01421
PRODUCT	FAST	1.00721	1.00757	1.01168	1.01157
	RESONANCE	0.95057	0.98690	0.96900	0.96019
	THERMAL	-------	-------	-------	-------
	1-GROUP	1.00716	1.00762	1.01173	1.01156

===== TABLE R.B.VI.3 REACTION RATES - VOID = 90% FOR PU239 (SRAC/VIM) =====

BURNUP		0 GWD/T		50 GWD/T	
VM / VF		0.6	1.1	0.6	1.1
ABSORPT	FAST	0.99104	1.00164	0.99226	1.00412
	RESONANCE	1.00961	1.00194	1.00941	1.00171
	THERMAL	0.66023	0.78280	0.60191	0.73962
	1-GROUP	0.99872	0.99701	0.99902	0.99608
FISSION	FAST	0.99067	1.00087	0.99204	1.00337
	RESONANCE	1.00917	1.00119	1.00626	1.00238
	THERMAL	0.66803	0.78457	0.61661	0.74558
	1-GROUP	0.99636	0.99598	0.99579	0.99620
PRODUCT	FAST	0.99087	1.00091	0.99230	1.00342
	RESONANCE	1.00914	1.00114	1.00625	1.00240
	THERMAL	0.66802	0.78451	0.61661	0.74558
	1-GROUP	0.99631	0.99604	0.99588	0.99634

===== TABLE R.B.VI.4 REACTION RATES - VOID = 90% FOR PU240 (SRAC/VIM) =====

BURNUP		0 GWD/T		50 GWD/T	
VM / VF		0.6	1.1	0.6	1.1
ABSORPT	FAST	0.99555	1.00519	0.99688	1.00817
	RESONANCE	0.99866	0.99305	1.00322	0.98686
	THERMAL	0.74357	0.78714	0.72821	0.78658
	1-GROUP	0.98799	0.96863	0.99207	0.96884
FISSION	FAST	0.99713	1.00500	0.99947	1.00851
	RESONANCE	0.99466	0.99662	0.99613	0.99803
	THERMAL	0.74269	0.78839	0.72932	0.78757
	1-GROUP	0.99691	1.00420	0.99918	1.00747
PRODUCT	FAST	0.99730	1.00469	0.99961	1.00827
	RESONANCE	0.99460	0.99665	0.99609	0.99802
	THERMAL	0.74264	0.78839	0.72928	0.78763
	1-GROUP	0.99709	1.00397	0.99933	1.00731

===== TABLE R.B.VI.5 REACTION RATES - VOID = 90% FOR PU241 (SRAC/VIM) =====

BURNUP		0 GWD/T		50 GWD/T	
VM / VF		0.6	1.1	0.6	1.1
ABSORPT	FAST	0.99104	1.00221	0.99202	1.00452
	RESONANCE	1.01197	1.00569	1.00588	1.00549
	THERMAL	0.67169	0.77830	0.65647	0.74511
	1-GROUP	1.00034	1.00033	0.99772	1.00010
FISSION	FAST	0.99113	1.00197	0.99218	1.00429
	RESONANCE	1.01196	1.00625	1.00607	1.00572
	THERMAL	0.68054	0.78274	0.66844	0.75217
	1-GROUP	0.99995	1.00061	0.99765	1.00034
PRODUCT	FAST	0.99119	1.00190	0.99226	1.00423
	RESONANCE	1.01198	1.00623	1.00604	1.00569
	THERMAL	0.68055	0.78279	0.66844	0.75217
	1-GROUP	0.99983	1.00056	0.99759	1.00039

===== TABLE R.B.VI.6 REACTION RATES - VOID = 90% FOR PU242 (SRAC/VIM) =====

BURNUP		0 GWD/T		50 GWD/T	
VM / VF		0.6	1.1	0.6	1.1
ABSORPT	FAST	0.99784	1.00367	0.99904	1.01065
	RESONANCE	1.02784	1.02535	1.02996	1.02878
	THERMAL	0.94554	0.81822	0.74045	0.87441
	1-GROUP	1.00717	0.96909	0.98858	0.98772
FISSION	FAST	1.00093	1.00414	1.00315	1.01168
	RESONANCE	1.00892	1.01555	0.99365	1.02293
	THERMAL	0.92477	0.81659	0.73990	0.86810
	1-GROUP	1.00105	1.00416	1.00296	1.01177
PRODUCT	FAST	1.00080	1.00753	1.00307	1.01114
	RESONANCE	1.00885	1.01943	0.99362	1.02298
	THERMAL	0.92476	0.81979	0.73988	0.86810
	1-GROUP	1.00088	1.00754	1.00284	1.01119

===== TABLE R.B.VI.7 REACTION RATES - VOID = 90% FOR AM241 (SRAC/VIM) =====

BURNUP		0 GWD/T		50 GWD/T	
VM / VF		0.6	1.1	0.6	1.1
ABSORPT	FAST	-------	-------	0.99549	1.00752
	RESONANCE	-------	-------	1.00330	1.00436
	THERMAL	-------	-------	0.72545	0.81440
	1-GROUP	-------	-------	0.99305	0.98869
FISSION	FAST	-------	-------	1.00793	1.01464
	RESONANCE	-------	-------	1.00663	1.00786
	THERMAL	-------	-------	0.74216	0.80080
	1-GROUP	-------	-------	1.00758	1.01318
PRODUCT	FAST	-------	-------	1.00751	1.01382
	RESONANCE	-------	-------	1.00654	1.00781
	THERMAL	-------	-------	0.74215	0.80083
	1-GROUP	-------	-------	1.00723	1.01250

===== TABLE R.B.VI.8 REACTION RATES - VOID = 90% FOR AM243 (SRAC/VIM) =====

BURNUP		0 GWD/T		50 GWD/T	
VM / VF		0.6	1.1	0.6	1.1
ABSORPT	FAST	-------	-------	0.99746	1.00946
	RESONANCE	-------	-------	0.99910	0.98600
	THERMAL	-------	-------	0.76708	0.77747
	1-GROUP	-------	-------	0.98697	0.95859
FISSION	FAST	-------	-------	1.01045	1.01744
	RESONANCE	-------	-------	0.99944	0.98598
	THERMAL	-------	-------	0.76837	0.78339
	1-GROUP	-------	-------	1.00983	1.01487
PRODUCT	FAST	-------	-------	1.00975	1.01627
	RESONANCE	-------	-------	0.99941	0.98602
	THERMAL	-------	-------	0.76832	0.78340
	1-GROUP	-------	-------	1.00923	1.01403

===== TABLE R.B.VI.9 REACTION RATES - VOID = 90% FOR TOTAL FISSION PRODUCTS (SRAC/VIM) =====

BURNUP		0 GWD/T		50 GWD/T	
VM / VF		0.6	1.1	0.6	1.1
ABSORPT	FAST	-------	-------	0.99248	1.00319
	RESONANCE	-------	-------	0.97839	0.98891
	THERMAL	-------	-------	0.69653	0.77737
	1-GROUP	-------	-------	0.97405	0.97371
FISSION	FAST	-------	-------	-------	-------
	RESONANCE	-------	-------	-------	-------
	THERMAL	-------	-------	-------	-------
	1-GROUP	-------	-------	-------	-------
PRODUCT	FAST	-------	-------	-------	-------
	RESONANCE	-------	-------	-------	-------
	THERMAL	-------	-------	-------	-------
	1-GROUP	-------	-------	-------	-------

===== TABLE R.B.VII.1 REACTION RATES - VOID = 99% FOR U-235 (SRAC/VIM) =====

BURNUP		0 GWD/T		50 GWD/T	
VM / VF		0.6	1.1	0.6	1.1
ABSORPT	FAST	0.98758	0.98967	0.98762	0.99025
	RESONANCE	1.02644	1.02775	1.01884	1.02129
	THERMAL	0.23518	0.24116	0.34503	0.64443
	1-GROUP	0.99968	1.00204	0.99779	1.00127
FISSION	FAST	0.98766	0.98960	0.98802	0.99045
	RESONANCE	1.02515	1.02868	1.01799	1.02153
	THERMAL	0.21891	0.23750	0.33693	0.58118
	1-GROUP	0.99851	1.00134	0.99707	1.00064
PRODUCT	FAST	0.98789	0.98985	0.98833	0.99075
	RESONANCE	1.02531	1.02882	1.01815	1.02168
	THERMAL	0.21891	0.23749	0.33695	0.58119
	1-GROUP	0.99857	1.00144	0.99724	1.00083

===== TABLE R.B.VII.2 REACTION RATES - VOID = 99% FOR U-238 (SRAC/VIM) =====

BURNUP		0 GWD/T		50 GWD/T	
VM / VF		0.6	1.1	0.6	1.1
ABSORPT	FAST	0.99202	0.99268	0.99310	0.99320
	RESONANCE	1.02712	1.02396	1.02475	1.02203
	THERMAL	0.23911	0.25812	0.34596	0.71472
	1-GROUP	1.00135	1.00099	1.00184	1.00135
FISSION	FAST	1.00606	1.00975	1.01790	1.01669
	RESONANCE	0.91507	0.96699	0.91833	0.97716
	THERMAL	-------	-------	-------	-------
	1-GROUP	1.00603	1.00975	1.01785	1.01667
PRODUCT	FAST	1.00379	1.00696	1.01542	1.01423
	RESONANCE	0.91512	0.96699	0.91834	0.97718
	THERMAL	-------	-------	-------	-------
	1-GROUP	1.00379	1.00691	1.01542	1.01422

===== TABLE R.B.VII.3 REACTION RATES - VOID = 99% FOR PU239 (SRAC/VIM) =====

BURNUP		0 GWD/T		50 GWD/T	
VM / VF		0.6	1.1	0.6	1.1
ABSORPT	FAST	0.98772	0.98976	0.98862	0.99091
	RESONANCE	1.03163	1.03117	1.02365	1.02197
	THERMAL	0.22554	0.19130	0.29471	0.26879
	1-GROUP	0.99970	1.00159	0.99861	1.00055
FISSION	FAST	0.98799	0.98926	0.98931	0.99086
	RESONANCE	1.03078	1.02967	1.01991	1.02265
	THERMAL	0.22833	0.19955	0.29568	0.30132
	1-GROUP	0.99643	0.99761	0.99563	0.99812
PRODUCT	FAST	0.98823	0.98948	0.98965	0.99117
	RESONANCE	1.03077	1.02965	1.01989	1.02267
	THERMAL	0.22833	0.19956	0.29570	0.30130
	1-GROUP	0.99643	0.99759	0.99580	0.99822

===== TABLE R.B.VII.4 REACTION RATES - VOID = 99% FOR PU240 (SRAC/VIM) =====

BURNUP		0 GWD/T		50 GWD/T	
VM / VF		0.6	1.1	0.6	1.1
ABSORPT	FAST	0.99310	0.99598	0.99576	0.99774
	RESONANCE	1.02884	1.02857	1.02260	1.02912
	THERMAL	0.30700	0.19413	0.18399	0.35983
	1-GROUP	1.00279	1.00247	1.00295	1.00664
FISSION	FAST	0.99903	1.00108	1.00513	1.00576
	RESONANCE	1.01968	1.04370	1.01188	1.04307
	THERMAL	0.30118	0.19665	0.19194	0.37086
	1-GROUP	1.00005	1.00330	1.00550	1.00783
PRODUCT	FAST	0.99900	1.00097	1.00532	1.00580
	RESONANCE	1.01968	1.04367	1.01183	1.04308
	THERMAL	0.30119	0.19666	0.19194	0.37085
	1-GROUP	0.99997	1.00297	1.00565	1.00774

===== TABLE R.B.VII.5 REACTION RATES - VOID = 99% FOR PU241 (SRAC/VIM) =====

BURNUP		0 GWD/T		50 GWD/T	
VM / VF		0.6	1.1	0.6	1.1
ABSORPT	FAST	0.98709	0.98942	0.98735	0.99003
	RESONANCE	1.02636	1.02774	1.02116	1.02348
	THERMAL	0.21091	0.23742	0.29516	0.53521
	1-GROUP	0.99849	1.00097	0.99759	1.00109
FISSION	FAST	0.98732	0.98922	0.98772	0.99003
	RESONANCE	1.02580	1.02716	1.02061	1.02304
	THERMAL	0.21497	0.23624	0.30340	0.55854
	1-GROUP	0.99788	1.00002	0.99714	1.00037
PRODUCT	FAST	0.98744	0.98929	0.98800	0.99022
	RESONANCE	1.02574	1.02715	1.02061	1.02300
	THERMAL	0.21496	0.23624	0.30341	0.55856
	1-GROUP	0.99775	0.99994	0.99716	1.00034

===== TABLE R.B.VII.6 REACTION RATES - VOID = 99% FOR PU242 (SRAC/VIM) =====

BURNUP		0 GWD/T		50 GWD/T	
VM / VF		0.6	1.1	0.6	1.1
ABSORPT	FAST	0.99509	0.99473	0.99744	0.99997
	RESONANCE	1.05225	1.04281	1.04587	1.04998
	THERMAL	0.31586	0.29077	0.57171	0.38851
	1-GROUP	1.00893	1.00152	1.01084	1.01061
FISSION	FAST	1.00369	1.00229	1.01062	1.01126
	RESONANCE	1.06991	1.04014	1.01636	1.06904
	THERMAL	0.31053	0.28525	0.54716	0.39564
	1-GROUP	1.00418	1.00260	1.01064	1.01175
PRODUCT	FAST	1.00332	1.00551	1.01047	1.01088
	RESONANCE	1.06988	1.04412	1.01637	1.06904
	THERMAL	0.31053	0.28633	0.54716	0.39564
	1-GROUP	1.00378	1.00583	1.01039	1.01135

===== TABLE R.B.VII.7 REACTION RATES - VOID = 99% FOR AM241 (SRAC/VIM) =====

BURNUP		0 GWD/T		50 GWD/T	
VM / VF		0.6	1.1	0.6	1.1
ABSORPT	FAST	-------	-------	0.99036	0.99249
	RESONANCE	-------	-------	1.01994	1.02220
	THERMAL	-------	-------	0.30585	0.57363
	1-GROUP	-------	-------	0.99956	1.00249
FISSION	FAST	-------	-------	1.01462	1.01485
	RESONANCE	-------	-------	1.02110	1.01752
	THERMAL	-------	-------	0.29234	0.62129
	1-GROUP	-------	-------	1.01476	1.01489
PRODUCT	FAST	-------	-------	1.01416	1.01424
	RESONANCE	-------	-------	1.02104	1.01751
	THERMAL	-------	-------	0.29235	0.62130
	1-GROUP	-------	-------	1.01427	1.01432

===== TABLE R.B.VII.8 REACTION RATES - VOID = 99% FOR AM243 (SRAC/VIM) =====

BURNUP		0 GWD/T		50 GWD/T	
VM / VF		0.6	1.1	0.6	1.1
ABSORPT	FAST	-------	-------	0.99139	0.99329
	RESONANCE	-------	-------	1.01624	1.01798
	THERMAL	-------	-------	0.37762	0.59366
	1-GROUP	-------	-------	0.99945	1.00169
FISSION	FAST	-------	-------	1.01741	1.01812
	RESONANCE	-------	-------	1.01610	1.01771
	THERMAL	-------	-------	0.37423	0.58972
	1-GROUP	-------	-------	1.01736	1.01808
PRODUCT	FAST	-------	-------	1.01657	1.01718
	RESONANCE	-------	-------	1.01605	1.01771
	THERMAL	-------	-------	0.37425	0.58967
	1-GROUP	-------	-------	1.01658	1.01713

===== TABLE R.B.VII.9 REACTION RATES - VOID = 99% FOR TOTAL FISSION PRODUCTS (SRAC/VIM) =====

BURNUP		0 GWD/T		50 GWD/T	
VM / VF		0.6	1.1	0.6	1.1
ABSORPT	FAST	-------	-------	0.98417	0.98905
	RESONANCE	-------	-------	1.00213	1.00877
	THERMAL	-------	-------	0.27346	0.57146
	1-GROUP	-------	-------	0.99229	0.99798
FISSION	FAST	-------	-------	-------	-------
	RESONANCE	-------	-------	-------	-------
	THERMAL	-------	-------	-------	-------
	1-GROUP	-------	-------	-------	-------
PRODUCT	FAST	-------	-------	-------	-------
	RESONANCE	-------	-------	-------	-------
	THERMAL	-------	-------	-------	-------
	1-GROUP	-------	-------	-------	-------

Appendix Ⅳ Sample Inputs for VIM and SRAC

```
//JCLG  JOB
// EXEC JCLG
//SYSIN DD DATA,DLM='++'
//JUSER XXXX4244,KE.OKUMURA,0431.01
   T.9 C.3 W.6 I.8 NGT
   OPTP PASSWORD=??????,MSGCLASS=X,NOTIFY=J4244
//*****************************************
//*  VIM SAMPLE INPUT : (PROTEUS CORE 1)  *
//*  FILE : J4244.NEABENCH.CNTL(PROTCR1)  *
//*****************************************
// EXEC ANY
//VIM EXEC LMGO,LM='J3803.VIMJAERI',PNM=VIM
//FT06F001 DD DSN=J4244.PROTCR1.OUTLIST,DISP=SHR
//FT07F001 DD DSN=J4244.PROTCR1.RETALLY.DATA,DISP=(NEW,CATLG,DELETE),
//   SPACE=(TRK,(2,2),RLSE),DCB=(RECFM=FB,LRECL=80,BLKSIZE=3120),
//   UNIT=TSSWK
// EXPAND DISK,DDN=FT10F001
//FT11F001 DD DSN=J4244.PROTCR1.REST11.DATA,DISP=(NEW,CATLG,DELETE),
//   DCB=(RECFM=VBS,LRECL=X,BLKSIZE=23476),SPACE=(TRK,(10,10),RLSE),
//   UNIT=TSSWK
//FT12F001 DD DSN=J4244.PROTCR1.REST12.DATA,DISP=(NEW,CATLG,DELETE),
//   DCB=(RECFM=VBS,LRECL=X,BLKSIZE=23476),SPACE=(TRK,(50,30),RLSE),
//   UNIT=TSSWK
// EXPAND DISK,DDN=FT13F001,SPC='100,10'
// EXPAND DISK,DDN=FT14F001,SPC='100,10'
// EXPAND DISK,DDN=FT15F001,SPC='100,10'
// EXPAND DISK,DDN=FT16F001,SPC='500,90'
// EXPAND DISK,DDN=FT17F001,SPC='150,10'
// EXPAND DISK,DDN=FT18F001,SPC='100,10'
//FT21F001 DD DSN=J4244.STAYJ2P.DATA,DISP=SHR,LABEL=(,,,IN)
//FT22F001 DD DSN=J4244.MOVEJ2P.DATA,DISP=SHR,LABEL=(,,,IN)
//SYSIN DD *
1987654321A8            PROTEUS (CORE-1 : H2O)
        100           3           0           5           0          -1
       2000        2000           5           0           0           0
          1           1           0           0          50
         18           4           9          90          22        2000
      2650.     1.00E-5       275.0         0.9     1.00E-5       1.E+7
       0.90  3.92790E+0       100.0
    1     0     0     0     0     0     0     0     0     0           0
 10300 20300 30300 40300 50300110300130030021030022030023030024030026030
28030029030035030038030042030090030 0
    5 10300 20300 30300 40300 50300
    5 10300 20300 30300 40300 50300
          0          21          21
  CYL    1        0.        0.        0.    1.E+15  0.193412
  CYL    2        0.        0.        0.    1.E+15  0.273526
  CYL    3        0.        0.        0.    1.E+15     0.335
  CYL    4        0.        0.        0.    1.E+15     0.411
  CYL    5  0.779423      0.45        0.    1.E+15  0.193412
  CYL    6  0.779423      0.45        0.    1.E+15  0.273526
  CYL    7  0.779423      0.45        0.    1.E+15     0.335
  CYL    8  0.779423      0.45        0.    1.E+15     0.411
  CYL    9 -0.779423      0.45        0.    1.E+15  0.193412
  CYL   10 -0.779423      0.45        0.    1.E+15  0.273526
  CYL   11 -0.779423      0.45        0.    1.E+15     0.335
  CYL   12 -0.779423      0.45        0.    1.E+15     0.411
  CYL   13 -0.779423     -0.45        0.    1.E+15  0.193412
  CYL   14 -0.779423     -0.45        0.    1.E+15  0.273526
  CYL   15 -0.779423     -0.45        0.    1.E+15     0.335
  CYL   16 -0.779423     -0.45        0.    1.E+15     0.411
  CYL   17  0.779423     -0.45        0.    1.E+15  0.193412
  CYL   18  0.779423     -0.45        0.    1.E+15  0.273526
  CYL   19  0.779423     -0.45        0.    1.E+15     0.335
  CYL   20  0.779423     -0.45        0.    1.E+15     0.411
  RPP   21 -0.779423  0.779423     -0.45      0.45       0.0    1.E+15
  RPP   22 -0.800000  0.800000     -0.50      0.50      -1.0    2.E+15
  END
```

```
    1          +1
    2          +2      -1
    3          +3      -2
    4          +4      -3
    5         +21      -4      -8     -12     -16     -20
    6         +21      +5
    7         +21      +6      -5
    8         +21      +7      -6
    9         +21      +8      -7
   10         +21      +9
   11         +21     +10      -9
   12         +21     +11     -10
   13         +21     +12     -11
   14         +21     +13
   15         +21     +14     -13
   16         +21     +15     -14
   17         +21     +16     -15
   18         +21     +17
   19         +21     +18     -17
   20         +21     +19     -18
   21         +21     +20     -19
   22         +22     -21
  END
     1  1.17521+14     2  1.17521+14     3  1.17521+14     4  1.78116+14
     5  3.41599+14     6  2.93804+13     7  2.93804+13     8  2.93804+13
     9  4.45289+13    10  2.93804+13    11  2.93804+13    12  2.93804+13
    13  4.45289+13    14  2.93804+13    15  2.93804+13    16  2.93804+13
    17  4.45289+13    18  2.93804+13    19  2.93804+13    20  2.93804+13
    21  4.45289+13
     1   1 1   1       1     2   2 1   1       1     3   3 1   1       1
     4   4 0   3       1     5   9 0   4       1     6   5 2   2       1
     7   6 2   2       1     8   7 2   2       1     9   8 0   3       1
    10   5 2   2       1    11   6 2   2       1    12   7 2   2       1
    13   8 0   3       1    14   5 2   2       1    15   6 2   2       1
    16   7 2   2       1    17   8 0   3       1    18   5 2   2       1
    19   6 2   2       1    20   7 2   2       1    21   8 0   3       1
    22  10 0  -2       1
 10300 20300 30300 40300 50300110300130300210300220300230300240300260300
2803002903003503003803 00
 20300 30300 40300 50300240300260300

2103002203002303002403002803002903003803004203 00

260300900300

 5.69900E-04 5.67500E-05 7.78100E-05 1.83900E-02 2.58000E-03 1.25600E-05
 3.83300E-05 6.84300E-04 3.30100E-04 2.60000E-03 3.68300E-04 4.34600E-02
 8.12300E-06 5.37600E-05 2.00500E-04 3.28600E-05
 1.00000E-12 9.85100E-05 2.32800E-02 1.00000E-12 3.82700E-04 4.67700E-02
 8.53600E-03 5.11800E-03 3.12500E-02 6.08000E-03 7.35400E-04 1.00100E-03
 8.12400E-04 1.32300E-05
 3.32600E-02 6.65200E-02
  7.7880E+06  6.0653E+06  4.7237E+06  3.6788E+06  2.8651E+06  2.2313E+06
  1.7377E+06  1.3534E+06  1.0540E+06  8.2085E+05  6.3928E+05  4.9787E+05
  3.8774E+05  3.0197E+05  2.3518E+05  1.8316E+05  1.4264E+05  1.1109E+05
  8.6517E+04  6.7380E+04  5.2475E+04  4.0868E+04  3.1828E+04  2.4788E+04
  1.9305E+04  1.5034E+04  1.1709E+04  9.1188E+03  7.1017E+03  5.5308E+03
  4.3074E+03  3.3546E+03  2.6126E+03  2.0347E+03  1.5846E+03  1.2341E+03
  9.6112E+02  7.4852E+02  5.8295E+02  4.5400E+02  3.5357E+02  2.7536E+02
  2.1445E+02  1.6702E+02  1.3007E+02  1.0130E+02  7.8893E+01  6.1442E+01
  4.7851E+01  3.7266E+01  2.9023E+01  2.2603E+01  1.7604E+01  1.3710E+01
  1.0677E+01  8.3153E+00  6.4760E+00  5.0435E+00  3.9279E+00  3.0590E+00
  2.3824E+00  1.8554E+00  1.6374E+00  1.4450E+00  1.2752E+00  1.1254E+00
  9.9312E-01  8.7642E-01  7.7344E-01  6.8256E-01  6.0236E-01  5.3158E-01
  4.6912E-01  4.1399E-01  3.6528E-01  3.1961E-01  2.7699E-01  2.3742E-01
  2.0090E-01  1.6743E-01  1.3700E-01  1.0963E-01  8.5397E-02  6.4017E-02
  4.5785E-02  3.0602E-02  1.8467E-02  9.3805E-03  3.3423E-03  1.0000E-05
/*
++
//
```

```
//JCLG  JOB
// EXEC JCLG
//SYSIN DD DATA,DLM='++'
// JUSER XXXX4244,KE.OKUMURA,0431.01
   T.9 C.3 W.6 I.8 NGT
   OPTP PASSWORD=??????,MSGCLASS=X,NOTIFY=J4244
//*****************************************
//*  VIM SAMPLE INPUT : (PROTEUS CORE 4)   *
//*  FILE : J4244.NEABENCH.CNTL(PROTCR4)   *
//*****************************************
// EXEC ANY
//VIM EXEC LMGO,LM='J3803.VIMJAERI',PNM=VIM
//FT06F001 DD DSN=J4244.PROTCR4.OUTLIST,DISP=SHR
//FT07F001 DD DSN=J4244.PROTCR4.RETALLY.DATA,DISP=(NEW,CATLG,DELETE),
//   SPACE=(TRK,(2,2),RLSE),DCB=(RECFM=FB,LRECL=80,BLKSIZE=3120),
//   UNIT=TSSWK2
// EXPAND DISK,DDN=FT10F001
//FT11F001 DD DSN=J4244.PROTCR4.REST11.DATA,DISP=(NEW,CATLG,DELETE),
//   DCB=(RECFM=VBS,LRECL=X,BLKSIZE=23476),SPACE=(TRK,(10,10),RLSE),
//   UNIT=TSSWK2
//FT12F001 DD DSN=J4244.PROTCR4.REST12.DATA,DISP=(NEW,CATLG,DELETE),
//   DCB=(RECFM=VBS,LRECL=X,BLKSIZE=23476),SPACE=(TRK,(50,30),RLSE),
//   UNIT=TSSWK2
// EXPAND DISK,DDN=FT13F001,SPC='100,10'
// EXPAND DISK,DDN=FT14F001,SPC='100,10'
// EXPAND DISK,DDN=FT15F001,SPC='100,10'
// EXPAND DISK,DDN=FT16F001,SPC='500,90'
// EXPAND DISK,DDN=FT17F001,SPC='150,10'
// EXPAND DISK,DDN=FT18F001,SPC='100,10'
//FT21F001 DD DSN=J4244.STAYJ2P.DATA,DISP=SHR,LABEL=(,,,IN)
//FT22F001 DD DSN=J4244.MOVEJ2P.DATA,DISP=SHR,LABEL=(,,,IN)
//SYSIN DD *
1987654321A8            PROTEUS (CORE-4 : DOWTHERM)
         100           3           0           5           0          -1
        2000        2000           5           0           0           0
           1           1           0           0          50
          18           4           9          90          26        2000
       2650.     1.00E-5       275.0         0.9     1.00E-5       1.E+7
        0.80  3.92790E+0       100.0
     1     0     0     0     0     0     0     0     0     0           0
 10300 20300 30300 40300 503001103001303002103002203002303002403002603002703002803002903003503003803004203005 10300 20300 30300 40300 50300
5 10300 20300 30300 40300 50300
           0          25          25
  CYL    1        0.        0.        0.    1.E+15  0.193412
  CYL    2        0.        0.        0.    1.E+15  0.273526
  CYL    3        0.        0.        0.    1.E+15     0.335
  CYL    4        0.        0.        0.    1.E+15     0.411
  CYL    5        0.       0.9        0.    1.E+15  0.193412
  CYL    6        0.       0.9        0.    1.E+15  0.273526
  CYL    7        0.       0.9        0.    1.E+15     0.335
  CYL    8        0.       0.9        0.    1.E+15     0.411
  CYL    9  0.779422      0.45        0.    1.E+15  0.193412
  CYL   10  0.779422      0.45        0.    1.E+15  0.273526
  CYL   11  0.779422      0.45        0.    1.E+15     0.335
  CYL   12  0.779422      0.45        0.    1.E+15     0.411
  CYL   13  0.779422      1.35        0.    1.E+15  0.193412
  CYL   14  0.779422      1.35        0.    1.E+15  0.273526
  CYL   15  0.779422      1.35        0.    1.E+15     0.335
  CYL   16  0.779422      1.35        0.    1.E+15     0.411
  CYL   17  1.558846        0.        0.    1.E+15  0.193412
  CYL   18  1.558846        0.        0.    1.E+15  0.273526
  CYL   19  1.558846        0.        0.    1.E+15     0.335
  CYL   20  1.558846        0.        0.    1.E+15     0.411
  CYL   21  1.558846       0.9        0.    1.E+15  0.193412
  CYL   22  1.558846       0.9        0.    1.E+15  0.273526
  CYL   23  1.558846       0.9        0.    1.E+15     0.335
  CYL   24  1.558846       0.9        0.    1.E+15     0.411
  RPP   25        0.  1.558846        0.      1.35        0.    1.E+15
  RPP   26       -.1  1.700000       -.1      1.45       -1.    2.E+15
  END
```

```
    1          +25      +1
    2          +25      +2      -1
    3          +25      +3      -2
    4          +25      +4      -3
    5          +25      +5
    6          +25      +6      -5
    7          +25      +7      -6
    8          +25      +8      -7
    9           +9
   10          +10      -9
   11          +11     -10
   12          +12     -11
   13          +25     +13
   14          +25     +14     -13
   15          +25     +15     -14
   16          +25     +16     -15
   17          +25     +17
   18          +25     +18     -17
   19          +25     +19     -18
   20          +25     +20     -19
   21          +25     +21
   22          +25     +22     -21
   23          +25     +23     -22
   24          +25     +24     -23
   25    15    +25      -4      -8     -12     -16     -20     -24
   26          +26     -25
  END
     1  2.93804E13     2  2.93804E13     3  2.93804E13     4  4.45289E13
     5  5.87609E13     6  5.87609E13     7  5.87609E13     8  8.90579E13
     9  1.17521E14    10  1.17521E14    11  1.17521E14    12  1.78116E14
    13  5.87609E13    14  5.87609E13    15  5.87609E13    16  8.90579E13
    17  2.93804E13    18  2.93804E13    19  2.93804E13    20  4.45289E13
    21  5.87609E13    22  5.87609E13    23  5.87609E13    24  8.90579E13
    25  5.12399E14
     1   5 2   2       1     2   6 2   2       1     3   7 2   2       1
     4   8 0   3       1     5   1 1   1       1     6   2 1   1       1
     7   3 1   1       1     8   4 0   3       1     9   1 1   1       1
    10   2 1   1       1    11   3 1   1       1    12   4 0   3       1
    13   5 2   2       1    14   6 2   2       1    15   7 2   2       1
    16   8 0   3       1    17   5 2   2       1    18   6 2   2       1
    19   7 2   2       1    20   8 0   3       1    21   1 1   1       1
    22   2 1   1       1    23   3 1   1       1    24   4 0   3       1
    25   9 0   4       1    26  10 0  -2       1
 10300 20300 30300 40300 50300110300130300210300220300230300240300260300
280300290300350300380300
 20300 30300 40300 50300240300260300

210300220300230300240300280300290300380300420300

260300270300350300

 5.69900E-04 5.67500E-05 7.78100E-05 1.83900E-02 2.58000E-03 1.25600E-05
 3.83300E-05 6.84300E-04 3.30100E-04 2.60000E-03 3.68300E-04 4.34600E-02
 8.12300E-06 5.37600E-05 2.00500E-04 3.28600E-05
 1.00000E-12 9.85100E-05 2.32800E-02 1.00000E-12 3.82700E-04 4.67700E-02
 8.53600E-03 5.11800E-03 3.12500E-02 6.08000E-03 7.35400E-04 1.00100E-03
 8.12400E-04 1.32300E-05
 2.83200E-03 4.57800E-02 3.82400E-02
  7.7880E+06  6.0653E+06  4.7237E+06  3.6788E+06  2.8651E+06  2.2313E+06
  1.7377E+06  1.3534E+06  1.0540E+06  8.2085E+05  6.3928E+05  4.9787E+05
  3.8774E+05  3.0197E+05  2.3518E+05  1.8316E+05  1.4264E+05  1.1109E+05
  8.6517E+04  6.7380E+04  5.2475E+04  4.0868E+04  3.1828E+04  2.4788E+04
  1.9305E+04  1.5034E+04  1.1709E+04  9.1188E+03  7.1017E+03  5.5308E+03
  4.3074E+03  3.3546E+03  2.6126E+03  2.0347E+03  1.5846E+03  1.2341E+03
  9.6112E+02  7.4852E+02  5.8295E+02  4.5400E+02  3.5357E+02  2.7536E+02
  2.1445E+02  1.6702E+02  1.3007E+02  1.0130E+02  7.8893E+01  6.1442E+01
  4.7851E+01  3.7266E+01  2.9023E+01  2.2603E+01  1.7604E+01  1.3710E+01
  1.0677E+01  8.3153E+00  6.4760E+00  5.0435E+00  3.9279E+00  3.0590E+00
  2.3824E+00  1.8554E+00  1.6374E+00  1.4450E+00  1.2752E+00  1.1254E+00
  9.9312E-01  8.7642E-01  7.7344E-01  6.8256E-01  6.0236E-01  5.3158E-01
  4.6912E-01  4.1399E-01  3.6528E-01  3.1961E-01  2.7699E-01  2.3742E-01
  2.0090E-01  1.6743E-01  1.3700E-01  1.0963E-01  8.5397E-02  6.4017E-02
  4.5785E-02  3.0602E-02  1.8467E-02  9.3805E-03  3.3423E-03  1.0000E-05
/*
++
//
```

```
//JCLG  JOB
// EXEC JCLG
//SYSIN DD DATA,DLM='++'
// JUSER XXXX4244,KEISUKE,0431.01
    T.7 C.3 W.4 1.5
    OPTP  PASSWORD=??????,MSGCLASS=X,NOTIFY=J4244
//*****************************************
//*   VIM SAMPLE INPUT : UNIT PIN CELL    *
//*   CASE : VM/VF=1.1, EOL, 0% VOID      *
//*   FILE : NEABENCH.CNTL(MEV100)        *
//*****************************************
// EXEC ANY
//VIM EXEC LMGO,LM='J3803.VIMJAERI',PNM=VIM
//FT06F001 DD DSN=J4244.MEV100.OUTLIST,DISP=SHR
//FT07F001 DD DSN=J4244.MEV100.RETALLY.DATA,DISP=SHR
// EXPAND DISK,DDN=FT10F001
//FT11F001 DD DSN=J4244.MEV100.REST11.DATA,DISP=(,CATLG),UNIT=D0430,
//   DCB=(RECFM=VBS,LRECL=X,BLKSIZE=23476),SPACE=(TRK,(5,5),RLSE)
//FT12F001 DD DSN=J4244.MEV100.REST12.DATA,DISP=(,CATLG),UNIT=D0430,
//   DCB=(RECFM=VBS,LRECL=X,BLKSIZE=23476),SPACE=(TRK,(30,15),RLSE)
// EXPAND DISK,DDN=FT13F001,SPC='100,10'
// EXPAND DISK,DDN=FT14F001,SPC='100,10'
// EXPAND DISK,DDN=FT15F001,SPC='100,10'
// EXPAND DISK,DDN=FT16F001,SPC='500,90'
// EXPAND DISK,DDN=FT17F001,SPC='150,10'
// EXPAND DISK,DDN=FT18F001,SPC='100,10'
//FT21F001 DD DSN=J4244.STAYJ2Z.DATA,DISP=SHR,LABEL=(,,,IN)
//FT22F001 DD DSN=J4244.MOVEJ2Z.DATA,DISP=SHR,LABEL=(,,,IN)
//SYSIN DD *
E592B382063D   MEV100 ( EOL ,  VR=1.1 , 0% VOID , HOT , JENDL-2 LIB. )
         100           3           0           5           0           0
        2000        2000           1           0           0           0
           1           1           0           0          50
          17           3           4           3           4        2000
       1150.     1.00E-5       275.0         1.0     1.00E-5     1.50E+7
        0.95  3.92790E+0       100.0         0.0
     1     0     0     0     0     0     0     0     0     0     0
 10900 20900 30900 40900 50900110900130900140900260600260900460900670900
690600700901750900770900900600
     5 10900 20900 30900 40900 50900
     5 10900 20900 30900 40900 50900
           0           1           1
  CYL    1  0.0       0.0       0.0       1.000E15  0.410
  CYL    2  0.0       0.0       0.0       1.000E15  0.475
  RHP    3  0.0       0.0       0.0       1.000E15  1.2204
  RHP    4  0.0       0.0       -1.0      2.000E15  1.30
  END
  FUE    1     +1
  CLD    2     -1     +2
  MOD    2     -2     +3
  REF    2     -3     +4
  END
     1  5.28102E14     2  1.80720E14     3  5.81016E14
     1   1 1   1            2   2 0   2            3   3 0   3
     4   4 0  -2
 10900 20900 30900 40900 50900110900130900140900260900460900670900700901
750900770900
690600

260600900600

  5.3890E-04  2.9760E-04  3.2390E-05  1.9680E-02  1.0070E-03  1.7260E-04
  3.0630E-05  4.9000E-05  4.6080E-02  1.0900E-06  6.4700E-05  2.5910E-05
  5.7720E-05  5.7780E-05
  3.7020E-02
  2.3720E-02  4.7440E-02
  9.1180E+03  4.0000E+00  1.0000E-05
/*
++
//
```

```
//JCLG JOB
// EXEC JCLG
//SYSIN DD DATA,DLM='++'
// JUSER XXXX4244,KE.OKUMURA,0431.01
  T.5 C.3 W.4 I.4 GRP
 OPTP PASSWORD=?????,MSGCLASS=X,NOTIFY=J4244,MSGLEVEL=(1,1),CLASS=1
//*****************************************
//* SRAC SAMPLE INPUT : (PROTEUS CORE 1)  *
//*  FILE : J4244.NEABENCH.CNTL(PROTCR1S)  *
//*****************************************
//SRAC6RX EXEC LMGO,LM=J4244.SRAC6RX,PNM=SRAC6RX4
//RUN.FT07F001  DD DUMMY
// EXPAND GRMLP,SYSOUT=M
//FT81F001  DD DSN=&&WRK81,SPACE=(TRK,(120,10)),UNIT=WK10,
//          DCB=(RECFM=VBS,BLKSIZE=32760,LRECL=X,BUFNO=2)
//FT82F001  DD DSN=&&WRK82,SPACE=(TRK,(100,10)),UNIT=WK10,
//          DCB=(RECFM=VBS,BLKSIZE=32760,LRECL=X,BUFNO=2)
//FT83F001  DD DSN=&&WRK83,SPACE=(TRK,(100,10)),UNIT=WK10,
//          DCB=(RECFM=VBS,BLKSIZE=32760,LRECL=X,BUFNO=2)
//FT84F001  DD DSN=&&WRK84,SPACE=(TRK,(100,10)),UNIT=WK10,
//          DCB=(RECFM=VBS,BLKSIZE=32760,LRECL=X,BUFNO=2)
//FT04F001  DD DSN=&&WRK04,SPACE=(TRK,(30,10)),UNIT=WK10,
//          DCB=(RECFM=VBS,BLKSIZE=32760,LRECL=X,BUFNO=1)
//FT92F001  DD DSN=&&WRK92,SPACE=(TRK,(5,2)),UNIT=WK10,
//          DCB=(RECFM=FB,BLKSIZE=3120,LRECL=80)
//FT01F001  DD DSN=&&WRK01,SPACE=(TRK,(30,10)),UNIT=WK10,
//          DCB=(RECFM=VBS,BLKSIZE=32760,LRECL=X,BUFNO=1)
//FT02F001  DD DSN=&&WRK02,SPACE=(TRK,(30,10)),UNIT=WK10,
//          DCB=(RECFM=VBS,BLKSIZE=32760,LRECL=X,BUFNO=1)
//FT03F001  DD DSN=&&WRK03,SPACE=(TRK,(30,10)),UNIT=WK10,
//          DCB=(RECFM=VBS,BLKSIZE=32760,LRECL=X,BUFNO=1)
//FT08F001  DD DSN=&&WRK08,SPACE=(TRK,(30,10)),UNIT=WK10,
//           DCB=(RECFM=VBS,BLKSIZE=32760,LRECL=X,BUFNO=1)
//FT09F001  DD DSN=&&WRK09,SPACE=(TRK,(30,10)),UNIT=WK10,
//          DCB=(RECFM=VBS,BLKSIZE=32760,LRECL=X,BUFNO=1)
//FT10F001  DD DSN=&&WRK10,SPACE=(TRK,(30,10)),UNIT=WK10,
//          DCB=(RECFM=VBS,BLKSIZE=32760,LRECL=X,BUFNO=1)
//FT11F001  DD DSN=&&WRK11,SPACE=(TRK,(30,10)),UNIT=WK10,
//          DCB=(RECFM=VBS,BLKSIZE=32760,LRECL=X,BUFNO=1)
//FT12F001  DD DSN=&&WRK12,SPACE=(TRK,(30,10)),UNIT=WK10,
//          DCB=(RECFM=VBS,BLKSIZE=32760,LRECL=X,BUFNO=1)
//FT13F001  DD DSN=&&WRK13,SPACE=(TRK,(30,10)),UNIT=WK10,
//          DCB=(RECFM=VBS,BLKSIZE=32760,LRECL=X,BUFNO=1)
//FT21F001  DD DSN=&&WRK21,SPACE=(TRK,(30,10)),UNIT=WK10,
//          DCB=(RECFM=VBS,BLKSIZE=32760,LRECL=X,BUFNO=1)
//FT22F001  DD DSN=&&WRK22,SPACE=(TRK,(30,10)),UNIT=WK10,
//          DCB=(RECFM=VBS,BLKSIZE=32760,LRECL=X,BUFNO=1)
//FT31F001  DD DSN=&&WRK31,SPACE=(TRK,(20,5)),UNIT=WK10,
//          DCB=(RECFM=FB,BLKSIZE=3200,LRECL=80,BUFNO=1)
//FT32F001  DD DSN=&&WRK32,SPACE=(TRK,(20,5)),UNIT=WK10,
//          DCB=(RECFM=VBS,BLKSIZE=32760,LRECL=X,BUFNO=1)
//FT33F001  DD DSN=&&WRK33,SPACE=(TRK,(20,5)),UNIT=WK10,
//          DCB=(RECFM=VBS,BLKSIZE=32760,LRECL=X,BUFNO=1)
//********* JENDL2 ***************************************************
//FASTP     DD DSN=J2031.FASTLBJ2.PSEUDO.DATA,DISP=SHR,LABEL=(,,,IN)
//          DD DSN=J0752.FASTLBJ2.FINAL.FP.DATA,DISP=SHR,LABEL=(,,,IN)
//          DD DSN=J0752.FASTLBB5.FINAL.FP.DATA,DISP=SHR,LABEL=(,,,IN)
//          DD DSN=J0752.FASTLBJ2.FINAL.DATA2,DISP=SHR,LABEL=(,,,IN)
//          DD DSN=J0752.FASTLBJ2.FINAL.DATA,DISP=SHR,LABEL=(,,,IN)
//          DD DSN=J0752.FASTLBB5.FINAL.DATA,DISP=SHR,LABEL=(,,,IN)
//          DD DSN=J0752.FASTLBB4.FINAL.ADD.DATA,DISP=SHR,LABEL=(,,,IN)
//          DD DSN=J1480.FASTLBB4.DATA,DISP=SHR,LABEL=(,,,IN)
//THERMALP  DD DSN=J1480.THERMLJ2.ACTINIDE.DATA,DISP=SHR,LABEL=(,,,IN)
//          DD DSN=J2031.THERMAL.J2PSD.DATA,DISP=SHR,LABEL=(,,,IN)
//          DD DSN=J2031.THERMAL.J2FP.DATA,DISP=SHR,LABEL=(,,,IN)
//          DD DSN=J1480.THERMLJ2.DATA,DISP=SHR,LABEL=(,,,IN)
//          DD DSN=J2031.THERMAL.B5FP.DATA,DISP=SHR,LABEL=(,,,IN)
//          DD DSN=J1480.THERMLB4.DATA,DISP=SHR,LABEL=(,,,IN)
//MCROSS    DD DSN=J0752.MCROSS.J2ADD.DATA2,DISP=SHR,LABEL=(,,,IN)
//          DD DSN=J1480.MCROSSJ2.DATA,DISP=SHR,LABEL=(,,,IN)
//          DD DSN=J1480.MCROSS4.DATA,DISP=SHR,LABEL=(,,,IN)
//          DD DSN=J0752.MCROSS.J2ADD.DATA,DISP=SHR,LABEL=(,,,IN)
//          DD DSN=J0752.MCROSS.B4ADD.DATA,DISP=SHR,LABEL=(,,,IN)
//*********************************************************************
```

```
//FASTU      DD DSN=&&WRKFST,SPACE=(TRK,(50,10,50)),UNIT=WK10,
//           DCB=(RECFM=U,BLKSIZE=19069),DISP=(,DELETE)
//THERMALU   DD DSN=&&WRKTML,SPACE=(TRK,(50,10,50)),UNIT=WK10,
//           DCB=(RECFM=U,BLKSIZE=19069),DISP=(,DELETE)
//MICREF     DD DSN=&&MICREF,SPACE=(TRK,(15,2,100)),UNIT=WK10,
//           DCB=(RECFM=U,BLKSIZE=19069),DISP=(,DELETE)
//FLUX       DD DSN=&&FLUX,SPACE=(TRK,(20,10,10)),UNIT=WK10,
//           DCB=(RECFM=U,BLKSIZE=19069),DISP=(,DELETE)
//MACRO      DD DSN=&&MACRO,SPACE=(TRK,(20,10,200)),UNIT=WK10,
//           DCB=(RECFM=U,BLKSIZE=19069),DISP=(,DELETE)
//MACROWRK   DD DSN=&&MACWK,SPACE=(TRK,(15,5,200)),UNIT=WK10,
//           DCB=(RECFM=U,BLKSIZE=19069),DISP=(,DELETE)
//FT50F001 DD DSN=J3973.BURN.DATA(CHAIN66E),DISP=SHR,LABEL=(,,,IN)
//FT51F001   DD DSN=&&WRK51,SPACE=(TRK,(20,5)),UNIT=WK10,
//           DCB=(RECFM=VBS,BLKSIZE=32760,LRECL=X,BUFNO=1)
//FT52F001   DD DSN=&&WRK52,SPACE=(TRK,(20,5)),UNIT=WK10,
//           DCB=(RECFM=VBS,BLKSIZE=32760,LRECL=X,BUFNO=3)
//FT59F001   DD DUMMY
//FT98F001   DD DUMMY
//FT99F001   DD SYSOUT=*,DCB=(RECFM=FBA,LRECL=133,BLKSIZE=32718)
//SYSIN DD *
PRT1
PROTEUS-LWHCR ( CORE-1 )
 1 1 1 1 2   1 4 0 -2 1   0 0 0 0 2   0 0 1 0 0 / SRAC CONTROL
 8.279E-4   / CRITICAL BUCKLING
J4244            0 0
J4244            0 0
J4244            0 0
J4244            0 0
J4244            0 0
J4244            0 0
J4244            0 0
J4244            0 0
59 31  2 1 /
59(1) /
15(1) 15(2) 3 /
28 31 /
31 /
XU050001
XU080001
XU08W001
XO06W001
XPU90001
XPU00001
XPU10001
XPU20001
XAM10001
XH010001
XAL70001
XSIN0001
XMN50001
XFEN0001
XNIN0001
XCRN0001
XMON0001
XH01H001
XC020001
XN040001
XO060001
XU030001
XTH20001

 13 12 5 5 1   1 2 2 4 0   5 0 10 43 2   1 180 0   / PATH
 0 20 50 5 5     5 -1 0.0001 0.00001 0.01      1.2 100. 0.8 /
        5        5        ¥  1
        5        5        ¥  2
     1 2          ¥ S-T
 3 4      3 4     ¥ S-T
     1 2          ¥ S-T
 5(1)     /  X-R
 1 2 3 4 5 /  M-R
 0.0  2*0.77942  / RX
 0.0  0.45  0.9  / TY
 2  1  3   2   / NPTX
 1  2  2   3   / NPTX
 4(0.0  0.335  0.411  )/ RDP
```

```
 5 / NMAT
MAT1X01X  0 18 300. 0.67  1.0 /  MAT  1 : FUEL ROD(15% PU2/UO2)
XU050001  2 1 7.781E-05  / 1
XU08W001  2 1 1.839E-02  / 2
XPU90001  2 1 2.580E-03  / 3
XPU00001  2 1 5.699E-04  / 4
XPU10001  2 1 5.675E-05  / 5
XPU20001  2 1 1.256E-05  / 6
XAM10001  2 1 3.833E-05  / 7
XU030001  2 1 1.0E-12    / 8 DUMMY
XTH20001  2 1 1.0E-12    / 9 DUMMY
X006W001  0 0 4.346E-02  /10
XH010001  0 0 2.005E-04  /11
XAL70001  2 0 3.683E-04  /12
XFEN0001  2 0 2.600E-03  /13
XCRN0001  2 0 6.843E-04  /14
XNIN0001  2 0 3.301E-04  /15
XMN50001  2 0 5.376E-05  /16
XSIN0001  0 0 3.286E-05  /17
XMON0001  2 0 8.123E-06  /18
MAT2X02X  0 8 300. 0.152  1.0    /  MAT  2 : CLADDING (STEEL+AIR+AL)
XAL70001  2 0 6.080E-03  / 1
XFEN0001  2 0 3.125E-02  / 2
XCRN0001  2 0 8.536E-03  / 3
XNIN0001  2 0 5.118E-03  / 4
XMN50001  2 0 1.001E-03  / 5
XMON0001  2 0 7.354E-04  / 6
XSIN0001  0 0 8.124E-04  / 7
XN040001  0 0 1.323E-05  / 8
MAT3X03X  0 11 300. 0.67  1.0    /  MAT  3 : DEPLETED UO2
XU050001  2 1 9.851E-05  / 1
XU08W001  2 1 2.328E-02  / 2
XPU90001  2 1 1.0E-12    / 3 DUMMY
XPU00001  2 1 1.0E-12    / 4 DUMMY
XPU10001  2 1 1.0E-12    / 5 DUMMY
XPU20001  2 1 1.0E-12    / 6 DUMMY
XAM10001  2 1 1.0E-12    / 7 DUMMY
XU030001  2 1 1.0E-12    / 8 DUMMY
XTH20001  2 1 1.0E-12    / 9 DUMMY
X006W001  0 0 4.677E-02  / 10
XAL70001  0 0 3.827E-04  / 11
MAT4X04X  0 8 300. 0.152 1.0      /  MAT  4 : CLADDING (STEEL+AIR+AL)
XAL70001  2 0 6.080E-03  / 1
XFEN0001  2 0 3.125E-02  / 2
XCRN0001  2 0 8.536E-03  / 3
XNIN0001  2 0 5.118E-03  / 4
XMN50001  2 0 1.001E-03  / 5
XMON0001  2 0 7.354E-04  / 6
XSIN0001  0 0 8.124E-04  / 7
XN040001  0 0 1.323E-05  / 8
MAT5X05X  0 2 300. 0.10  1.0      /  MAT  5 : LIGHT WATER (300 D K)
XH01H001  0 0 6.652E-02  / 1
X0060001  0 0 3.326E-02  / 2
0 0 10 2 / IOPT(1:3),MREC --------- << REACTION RATE >> -------------+
9 9      / NREC                                                      |
1 1 2 1 0 0 59(1.0) 31(0.0) / MPOSI,L235,L238,IX,IY,IZ,FGS(1:IGMAX) |
1 3 4 1 0 0 59(1.0) 31(0.0) /                                        |
1 5 6 1 0 0 59(1.0) 31(0.0) /                                        |
1 7 8 1 0 0 59(1.0) 31(0.0) /                                        |
1 9 9 1 0 0 59(1.0) 31(0.0) /                                        |
2 1 2 3 0 0 59(1.0) 31(0.0) /                                        |
2 3 4 3 0 0 59(1.0) 31(0.0) /                                        |
2 5 6 3 0 0 59(1.0) 31(0.0) /                                        |
2 7 8 3 0 0 59(1.0) 31(0.0) /                                        |
2 9 9 3 0 0 59(1.0) 31(0.0) / ------------------------------------+
0  / PLOT(PAECO)

++
//
```

```
//*****************************************
//*  SRAC SAMPLE INPUT : (PROTEUS CORE 4)  *
//*  FILE : J4244.NEABENCH.CNTL(PROTCR4S)  *
//*****************************************
//SYSIN DD *
PRT4
PROTEUS-LWHCR ( CORE-4 )
 1 1 1 1 2   1 4 0 -2 1   0 0 0 0 2   0 0 1 0 0 / SRAC CONTROL
 9.18051E-4      / CRITICAL BUCKLING
J4244            0 0
J4244            0 0
J4244            0 0
J4244            0 0
J4244            0 0
J4244            0 0
J4244            0 0
J4244            0 0
59 31  2 1 /
59(1) /
15(1) 15(2) 3 /
28 31 /
31 /
XU050001
XU080001
XU08W001
XO06W001
XPU90001
XPU00001
XPU10001
XPU20001
XAM10001
XH010001
XAL70001
XSIN0001
XMN50001
XFEN0001
XNIN0001
XCRN0001
XMON0001
XH01H001
XC020001
XN040001
XO060001
XU030001
XTH20001

 13 32 5 5 1   1 6 2 10 0   3 0 10 29 2   1 180 0   / PATH
 0 20 50 5 5 5 -1  0.0001 0.00001 0.001 1.0 10. 0.5 /
   5  5  5  5  5  5                        ¥  1
   5  5  5  5  5  5                        ¥  1
    1 2  3 4  1 2                          ¥ S-T
  3 4  1 2  1 2  3 4                       ¥ S-T
    1 2  3 4  1 2                          ¥ S-T
 5(1)    /  X-R
 1 2 3 4 5  /  M-R
 0.0  6*0.45              / RX
 0.0  2*0.77942           / TY
   2 4 6   1 3 5 7  2 4 6 / NPTX
   1 1 1   2 2 2 2  3 3 3 / NPTY
 10(0.0  0.335  0.411  )/ RDP
 5 / NMAT
MAT1X01X  0 18 300. 0.67  0.58755  /  MAT  1 : FUEL ROD(15% PU2/UO2)
XU050001  2 1 7.781E-05  / 1
XU08W001  2 1 1.839E-02  / 2
XPU90001  2 1 2.580E-03  / 3
XPU00001  2 1 5.699E-04  / 4
XPU10001  2 1 5.675E-05  / 5
XPU20001  2 1 1.256E-05  / 6
XAM10001  2 1 3.833E-05  / 7
XU030001  2 1 1.0E-12    / 8 DUMMY
XTH20001  2 1 1.0E-12    / 9 DUMMY
```

```
X006W001  0 0 4.346E-02  /10
XH010001  0 0 2.005E-04  /11
XAL70001  0 0 3.683E-04  /12
XFEN0001  0 0 2.600E-03  /13
XCRN0001  0 0 6.843E-04  /14
XNIN0001  0 0 3.301E-04  /15
XMN50001  0 0 5.376E-05  /16
XSIN0001  0 0 3.286E-05  /17
XMON0001  0 0 8.123E-06  /18
MAT2X02X  0 8 300. 0.10   1.0      /  MAT  2 : CLADDING (STEEL+AIR+AL)
XAL70001  0 0 6.080E-03  / 1
XFEN0001  0 0 3.125E-02  / 2
XCRN0001  0 0 8.536E-03  / 3
XNIN0001  0 0 5.118E-03  / 4
XMN50001  0 0 1.001E-03  / 5
XMON0001  0 0 7.354E-04  / 6
XSIN0001  0 0 8.124E-04  / 7
XN040001  0 0 1.323E-05  / 8
MAT3X03X  0 11 300. 0.67  0.58755  /  MAT  3 : DEPLETED UO2
XU050001  2 1 9.851E-05  / 1
XU08W001  2 1 2.328E-02  / 2
XPU90001  2 1 1.0E-12    / 3 DUMMY
XPU00001  2 1 1.0E-12    / 4 DUMMY
XPU10001  2 1 1.0E-12    / 5 DUMMY
XPU20001  2 1 1.0E-12    / 6 DUMMY
XAM10001  2 1 1.0E-12    / 7 DUMMY
XU030001  2 1 1.0E-12    / 8 DUMMY
XTH20001  2 1 1.0E-12    / 9 DUMMY
X006W001  0 0 4.677E-02  /10
XAL70001  0 0 3.827E-04  /11
MAT4X04X  0 8 300. 0.10   1.0      /  MAT  4 : CLADDING (STEEL+AIR+AL)
XAL70001  0 0 6.080E-03  / 1
XFEN0001  0 0 3.125E-02  / 2
XCRN0001  0 0 8.536E-03  / 3
XNIN0001  0 0 5.118E-03  / 4
XMN50001  0 0 1.001E-03  / 5
XMON0001  0 0 7.354E-04  / 6
XSIN0001  0 0 8.124E-04  / 7
XN040001  0 0 1.323E-05  / 8
MAT5X05X  0 3 300. 0.10  1.0      /  MAT  5 : DOWTHERM    (300 D K)
XH01H001  0 0 3.824E-02  / 1
X0060001  0 0 2.832E-03  / 2
XC020001  0 0 4.578E-02
0 0 10 2 / IOPT(1:3),MREC --------- << REACTION RATE >> -------------+
9 9      / NREC                                                      |
1 1 2 1 0 0 59(1.0) 31(0.0) / MPOSI,L235,L238,IX,IY,IZ,FGS(1:IGMAX)  |
1 3 4 1 0 0 59(1.0) 31(0.0) /                                        |
1 5 6 1 0 0 59(1.0) 31(0.0) /                                        |
1 7 8 1 0 0 59(1.0) 31(0.0) /                                        |
1 9 9 1 0 0 59(1.0) 31(0.0) /                                        |
2 1 2 3 0 0 59(1.0) 31(0.0) /                                        |
2 3 4 3 0 0 59(1.0) 31(0.0) /                                        |
2 5 6 3 0 0 59(1.0) 31(0.0) /                                        |
2 7 8 3 0 0 59(1.0) 31(0.0) /                                        |
2 9 9 3 0 0 59(1.0) 31(0.0) / ------------------------------------+
1  / PEACO

++
//
```

```
//*****************************************
//*  SRAC SAMPLE INPUT : UNIT PIN CELL    *
//*  CASE : VM/VF=1.1, EOL, 0% VOID       *
//*  FILE : J4244.NEABENCH.CNTL(SEV1)     *
//*****************************************
//SYSIN DD *
V170
RUN NO. V1E7 D:0.95  E: 7.0  V:1.1 VOID 0% EOL  CHAIN66E/PEACO
 1 1 1 1 2   1 4 0 -2 1   0 0 0 0 2   0 0 0 0 1 / SRAC CONTROL
1.000000E-15 / BUCKLING 0
J4244            0 0
J4244            0 0
J4244            0 0
J4244            0 0
J4244            0 0
J4244            0 0
J4244            0 0
J4244            0 0
59 31  2 1      /
59(1)           /
15(1) 15(2) 3   /
28 31           /
31              /
XU050009
XU060009
XU08W009
XO06W009
XPU90009
XPU00009
XPU10009
XPU20009
XNP90009
XAM10009
XAMM0009
XAMG0009
XAM30009
XCM40009
XZRN0008
XH01H008
XO060008
XKR30001
XZR50001
XZR30001
XZR60001
XMO50001
XMO70001
XMO90001
XMO80001
XMO00001
XTC90001
XRU10001
XRU30001
XRU50001
XRU20001
XRU40001
XRH30001
XRH50001
XPD50001
XPD70001
XPD80001
XPD90001
XPD60001
XAG90009
XAG90008
XCD30001
XCD00001
XCD10001
XIN50001
XIN50009
XI010001
XI030001
XI050001
XI070001
XI090001
XXE10001
XXE30001
```

```
XXE50001
XXE60001
XXE20001
XLA90001
XCS30001
XCS40001
XCS50001
XCE10001
XPR10001
XPR30001
XND30001
XND40001
XND50001
XND60001
XND70001
XND80001
XPM70001
XPMM0001
XPMG0001
XPM90001
XPM00001
XPM10001
XSM70001
XSM80001
XSM90001
XSM00001
XSM10001
XSM20001
XEU30001
XEU40001
XEU50001
XEU60001
XGD40001
XGD50001
XGD60001
XGD70001
XGD80001
XP670001
XFEN0008
XCRN0008

 6 5 5 3 1   1 5 0 0 0   5 0  6 15 0   0 30 0   / PATH
 0 20 50 5 5 5 -1  0.0001 0.00001 0.001 1.0 10. 0.5  /
 1 1 1 2 3 / T-R
 3(1)   /  R-X
 1 2 3  /  M-R
0.0 0.236714 0.334764 0.41 0.475 0.610200 / D : 0.95 VM/VF : 1.1
 -3 / NMAT
FUELX01X  0 14 900.0 0.82 0.0 / MAT 1 ; FUEL ROD UO2/PUO2
XU050009  2 1 3.2390E-05      /1      -------------------
XU08W009  2 1 1.9680E-02      /2      ENRICHMENT 7.0% EOL
XPU90009  2 1 1.0070E-03      /3      -------------------
XPU00009  2 1 5.3890E-04      /4
XPU10009  2 1 2.9760E-04      /5
XPU20009  2 1 1.7260E-04      /6
XAM10009  2 1 3.0630E-05      /7
XAM30009  2 1 4.9000E-05      /8
XO06W009  0 0 4.6080E-02      /9
XTC90001  2 1 5.7780E-05      /10
XRH30001  2 1 5.7720E-05      /11
XXE10001  2 1 2.5910E-05      /12
XCS30001  2 1 6.4700E-05      /13
XSM90001  2 1 1.0900E-06      /14
MAT2X08X  0 1 600. 0.13        0.0       /  MAT  2 : CLADDING
XZRN0008  2 1 3.7020E-02      / 1
MAT3XLWX  0 2 600. 1.0         0.0       /  MAT  3 : LIGHT WATER
XH01H008  0 0 4.7440E-02      / 1 VOID 0%
XO060008  0 0 2.3720E-02      / 2
1  0  2 /
1.600E-04  1.0     /      CORE POWER=1.6E-04 MW
9.62265E-04 /
0  /  PEACO

++
//
```