JAERI-M
9174

COMPUTED RESULTS ON THE IAEA BENCHMARK PROBLEMS AT JAERI

November 1980

Yoshitaka NAITO, Shin-ichiro TSURUTA*,
Bunsaku KOMUKAI and Masayoshi KUROSAWA

日本原子力研究所
Japan Atomic Energy Research Institute

JAERI-M 9174

Computed Results on the IAEA Benchmark Problems at JAERI

Yoshitaka NAITO[+1)], Shin-ichiro TSURUTA[*], Bunsaku KOMUKAI[+2)] and Masayoshi KUROSAWA[+3)]

Project on Reduced Enrichment Fuel, JAERI

(Received October 25, 1980)

The outline of the computer code system of JAERI for analysing research reactors is presented and the results of check calculations to validate the code system are evaluated by the experimental data. Using this computer code system, some of the IAEA benchmark problems are solved and the results are compared with those of ANL.

Keywords: Benchmark Problem, Research and Test Reactor, Core Conversion, Reduced Enrichment Fuel, Computer Code.

+1) Division of JPDR, Tokai, JAERI

*) Japan Information Survice, Ltd.

+2) Divsion of JMTR, Oarai, JAERI

+3) Division of Research Reactor Operation, Tokai, JAERI

ＩＡＥＡベンチマーク問題に対する原研の計算結果

日本原子力研究所中濃縮ウラン対策プロジェクト
計画技術ワーキンググループ
内藤　俶孝[+1)]・鶴田新一郎[*)]・小向　文作[+2)]・黒沢　正義[+3)]

（１９８０年１０月２５日受理）

研究炉を解析するための原研の計算コードシステムの概要が記されている。また，そのコードシステムの正当性を保証するための検証計算の結果が実験データを用いて評価されている。このコードシステムを用いて，いくつかのＩＡＥＡベンチマーク問題が解かれ，その結果がＡＮＬの計算結果と比較されている。

+1)　日本原子力研究所東海研究所動力試験炉部
*)　日本情報サービス（株）
+2)　日本原子力研究所大洗研究所材料試験炉部
+3)　日本原子力研究所東海研究所研究部管理部

CONTENTS

目　　次

1. Introduction

The benchmark problems were specified at the Consultants Meeting on "Preparation of a Programme on Research Reactor Core Conversions to Use LEU instead of HEU", IAEA, June 19-22, 1979 in Vienna, Austria. Some of the problems were solved at JAERI and the results were edited in the IAEA GUIDE BOOK.

In this report, firstly is presented the outline of our computer code system* which was used for solving the benchmark problems. Next, to validate the code system, the results of check calculations are described comparing with Monte Calro results. Then, our computed results on some of the IAEA benchmark problems are shown. In the last section, for a demonstration of our computer code system, three-dimensional burn-up distributions are shown for the JMTR (Japan Material Test Reactor) core.

2. Calculation Method

2.1 Outline of the computer code system for analysing research reactors at JAERI

A code system has been developed with KURRI (Kyoto University Research Reactor Institute) for analysing the core performance of research reactors. This code system consists of three parts. The first part is to obtain the multi-group nuclear constants library (MGCL) which is generated from the nuclear data file ENDF/B-4[1], and the 2nd part is to obtain burn-up dependent cell averaged few group constants table (FG-Table) by using the SN code ANISN-JR[2]. The third part is to calculate the burn-up dependent core performance using the three-dimensional neutron diffusion code FEDM or DIFFUSION - ACE[3] -2.

---

* Main parts of this code system were developed by cooperative research with Kyoto University Research Reactor Institute.

In these diffusion codes a reactor is divided in several layers along the Z axis and in several channels across the x-y plane as shown in Fig. 1. A region formed by a channel and a layer is named a block whose nuclear cross sections are obtained with the cell calculation.

A one-dimensional neutron flux calculation is performed for each channel with the radial leakage coefficient. A two-dimensional neutron flux calculation is then made for each layer with the axial leakage determined from the one-dimensional calculation. The one- and two-dimensional leakages will be iterated until the consistency is attained between the two.

The computer codes used for this benchmark calculation are listed in Table 1.

2.2 Generation of the multi-group nuclear constants library (MGCL)

The computer code system to produce the MGCL is shown in Fig. 2. The production of temperature dependent ultra-fine cross sections (about 70,000 energy points data) is performed by the computer code RESEND-D which is an improved version of RESEND[4)] developed at JAERI. To collapse the energy groups of the ultra fine data points, two kinds of weighting spectra are applied. One is generated from the following equation.

$$\phi(\varepsilon) = \frac{\sigma_o \phi_s}{\sigma_t^i + R^i \sigma_t^{238} + \sigma_o} , \qquad (1)$$

where ϕ_s is a standard neutron energy spectrum which consists of three parts, that is, fission spectrum, 1/E and Maxwellian parts,

$$\sigma_o = \frac{1}{N^i} \left(\mathop{\mathrm{Sum}}_{k \neq i,238} N^k \sigma_t^k + \frac{aG}{1} f(r) \right),$$

$$R^i = \frac{N^{238}}{N^i} .$$

The other is obtained by solving the neutron slowing down equation with the code FINESPEC. For many nuclides, the first weighting spectrum (1) is used and only for important nuclides, the second weighting spectrum is applied to obtain multi-group constants. The energy group structure for the MGCL is the same as the standard 137 energy group structure at JAERI shown in Table 2. By dividing effective multi-group constants (σ_{eff}) by the infinite multi-group constants (σ_{∞}), neutron shielding factors are obtained. These shielding factors are arranged in a shielding table.

The scattering matrices composed of 137 groups are obtained by using the computer codes SUPERTOG[5] and FLANGE[6] or PIXSE[7] as shown in Fig. 2. In these matrices, the up-scattering is taken into consideration for energies below 1.855 eV (45 energy groups of 137 groups). The infinite dilution cross sections, shielding factors and scattering matrices are edited into the MGCL.

2.3 Generation of the few-group nuclear constants library (FG-Table) or cell calculation

The computer code system to produce the FG-Table is shown in Figs. 3 and 4. This system is sometimes called the cell calculation system. The cell calculation routines consist of two parts, one is a unit cell calculation with 137 energy group constants and the other is a super cell calculation with collapsed group constants obtained from the unit cell calculation. Using the neutron energy spectrum distribution in a super cell, the effective microscopic few ($\simeq$3) group cross sections are obtained and stored in FG-Table.

2.4 Whole core calculation

Using the FG-Table and atomic number densities, macroscopic cross

sections are calculated by using the MACFIT code for each material block in the core (see Fig. 5). The neutron flux and thermal power distributions are obtained by solving the neutron diffusion equation with three dimensional diffusion code FEDM or DIFFUSION-ACE-2. With these neutron flux, and collapsed microscopic cross sections to one group, the burn-up distribution and atomic number densities distribution in a core are calculated by the COREBURN code.

3. Benchmark Calculation

3.1 Benchmark calculations of the TCA lattices for evaluating the MGCL

3.1.1 Purpose

In order to validate the multi-group constants library MGCL, Monte Carlo calculations were performed on many TCA critical experiments[8].

3.1.2 Method

The Tank-type Critical Assembly (TCA) essentially consists of fuel rods, grid plates and a core tank (1.83 m in diam. and 2.08 m in height). The vertical cross-sectional view is shown in Fig. 6.

The experimental lattices were built in the core tank. The moderator was light water. The reactor was operated by raising the water level from the bottom of the core tank by a feed water pump. No control rod was used for reactor operation. The maximum limitation of the power was 200 Watts. The fuel rods were made from 2.6 w/o enriched UO_2 or 3.0 w/o enriched PuO_2-natural UO_2. The fuel specifications are shown in Fig. 7 and Table 3. The water to fuel volume ratio in a lattice cell ranged from 1.50 to 3.00 for the UO_2 lattices or from 2.42 to 5.55 for the PuO_2-UO_2 lattices. The critical sizes were determined by measuring critical water level. The lattices were named by the water to fuel volume ratio and the fuel rod

type. For example, the lattice name 1.50U corresponds to the UO_2 lattice of which water to fuel volume ratio is 1.50, and a lattice name 2.42Pu to the PuO_2-UO_2 lattice of which the water to fuel volume ratio is 2.42. A list of the lattice names is shown in Table 4 with lattice pitches. Some examples of pattern of lattice configuration are shown in Fig. 8. Atomic number densities of materials in the lattice are given in Table 5.

To check the reliability of the MGCL used for following benchmark calculations, the many experimental data of TCA were analysed with the Monte Carlo code KENO-4[9] varying the lattice pitch and the number of fuel rods.

In these calculations, the number of neutron histories was selected to 30,000. To check the effect of the number of histories, recalculations with 60,000 histories wery performed for UO_2 lattices of TCA.

3.1.3 Results

The computed results by the KENO-4 with the MGCL are shown in Figs. 9 and 10.

The comparison between the computed results with 30,000 histories and 60,000 histories, shows that the standard deviation of the mean effective multiplication factor (k_{eff}) for 60,000 histories becomes smaller than that for 30,000 histories and the mean effective multiplication factors in both cases are almost the same.

The computed mean multiplication factors in UO_2 and PuO_2-UO_2 lattices are 0.99265 and 0.99412, respectively. That is, the computed values with the MGCL are about 0.7% $\Delta k/k$ smaller than the experimental one.

3.1.4 Discussion

Using our multi-group cross section library MGCL, computed multiplication

factors for light water moderator lattices with low enriched fuel rods are become smaller by about 0.7% than the measured ones. It is considered that this discrepancy comes from the estimation error of the neutron shielding factor of ^{238}U. We intend to correct the shielding factor using more precise neutron energy spectrum.

3.2 Benchmark calculations of the TCA lattices for evaluating the core calculation method

3.2.1 Purpose

As shown in Figs. 3, 4 and 5, the cell calculations were performed with the ANISN code and the core calculation was carried out with the diffusion code.

In order to validate the present cell calculation method, the computed results by the ANISN code were compared with those by the KENO-4 code for the several unit cells of TCA whose cell structure is shown in Fig. 11 for an example.

The effective multiplication factors of the ANL benchmark problems were computed by the diffusion code ADC[10] with the cell group constants obtained by the ANISN code. The computed results by the ADC were, therefore, compared with those by the KENO-4 code for the previously mentioned TCA lattices. The most important point of this study is to evaluate the diffusion coefficients obtained by the ANISN code.

3.2.2 Method

The 137 group constants library for the ANISN code and the KENO code was produced from the MGCL by the MAIL code. Using the same library, the effective multiplication factors in a unit cell of TCA were calculated by the ANISN code and the KENO code, to compare the results with each other.

The effective multiplication factors in TCA lattices were also obtained by two-dimensional diffusion calculation (ADC) and compared with those by the KENO code. A core model for diffusion calculation is shown in Fig. 12. To estimate perpendicularly directional neutron leakage, the vertical neutron flux buckling was obtained using the measured reflector saving shown in Table 6. The number of energy groups for the ADC is three, whose energy structure is shown in Table 7. The diffusion coefficients for the ADC were obtained from $D = 1/3\Sigma_{tr}$, where the Σ_{tr} was computed by the ANISN code.

3.2.3 Results

The computed results on several unit cell by the ANISN and the KENO are given in TAble 8, which shows a good agreement with each other. The computed results on TCA lattices by the ADC and the KENO code are shown in Table 9, which shows again a nice agreement with each other.

3.2.4 Discussion

One of the most difficult problems on diffusion calculations is how to estimate the diffusion coefficients. The diffusion coefficients used in our calculation seems to be relevant.

3.3 Benchmark calculations of MTR-Type Reactors with High, Medium and Low Enrichments (IAEA-Benchmark Problems)

3.3.1 Purpose

This is one of the IAEA benchmark problems reported in " U.S. CONTRIBUTIONS TO IAEA GUIDEBOOK ".

In order to compare our calculational methods and the results with those of ANL, some of the benchmark problems proposed by ANL (American National Laboratory) were analysed using our code system mentioned above.

Variation of atomic number densities and 3 group constants versus burn-up steps were especially compared with each other.

3.3.2 Method

The burn-up dependent unit cell calculation code (see Fig. 3) was used to generate the cross sections and atomic number densities of fissile material in the cell (Fig. 13) were calculated as a function of burn-up steps. Three energy group structure was selected to compare the computed results with those of ANL (Table 10).

The two-dimensional X-Y geometry diffusion theory calculations were performed with the JAERI code ADC using the core composition and mesh specifications shown in Figs. 14-1 and 14-2.

3.3.3 Results and discussion

The computed results of cell burn-up calculation are shown in Figs. 15-1, 15-2, 16-1, 16-2, and 16-3 and Tables 11 and 12.

Figure 15-1 shows the comparison of infinite multiplication factors (k_∞) calculated by ANISN (JAERI) and EPRI-CELL[11] (ANL). The values of k_∞ by JAERI decrease more slowly versus ^{235}U burn-up than those by ANL. Figure 15-2 shows the variation of atomic number densities of fissile materials versus ^{235}U burn-up. Plutonium isotopes are produced more in the case of ANL than that of JAERI. This reason comes from the discrepancy between the computed results of ^{238}U epithermal absorption cross section by JAERI and by ANL as shown in Table 11.

The computed effective multiplication factors (k_{eff}'s) by the two-dimensional diffusion calculations are shown in Table 13. For 93% enriched cases with all fresh fuel loaded core, the effective multiplication factor (k_{eff}) calculated by JAERI is almost coincide with the value by ANL. But for the other cases, the computed k_{eff}'s by JAERI are larger than those by ANL. These come from the same reasons menthioned above, that is, slowly

variation of k_∞ versus ^{235}U burn-up and smaller ^{238}U epithermal absorption cross section.

Figures 16-1 and 16-2 show neutron flux distributions in the core which show a good agreement with those computed by ANL. Figure 16-3 shows a ratio of ^{238}U capture to ^{235}U fission which predicts space dependency of neutron energy spectrum. This is the reason why we do not compute the burn-up dependent atom density distribution at the stage of cell calculation but of full core calculation.

The difference of computed results by JAERI from those by ANL, comes from the different estimation of the amount of a lumped fission product and the cross section, and the different estimation of ^{238}U epithermal absorption cross section. These two estimations are the most important ones for studies of reactor conversion from HEU to LEU fuel.

3.4 Studies of ^{235}U Loading with Uranium Enrichments of 45% and 20% to Match Infinite Excess Reactivity of 93% Enriched Reference Core. (IAEA-Benchmark Problems)

3.4.1 Purpose

This is one of the IAEA benchmark problems reported in " U.S. CONTRIBUTIONS TO IAEA GUIDEBOOK"

The uranium densities in the fuel meat with uranium enrichments of 45% and 20% were estimated by ANL to match the excess reactivity of 93% enriched reference core. Using the uranium densities, we calculated the excess reactivity of 93%, 45% and 20% enriched core and compared the results with those of ANL.

3.4.2 Method

The excess reactivity was calculated by the three dimensional diffusion code DIFFUSION-ACE-2. The calculation system for the DIFFUSION-ACE-2

is shown in Fig. 17. Three energy group diffusion parameters for DIFFUSION-ACE-2 were obtained by cell calculations using the ANISN code. The cell configuration and atomic number densities are shown in Fig. 18 and Table 14. In our calculations, three dimensional diffusion code was used, so that it was not necessary to estimate the vertical neutron flux buckling.

3.4.3 Results and Discussion

The computed results by the DIFFUSION-ACE-2 code are shown in Table 15, together with those computed by ANL.

The values of k_{eff} calculated by JAERI become larger than those by ANL as the enrichment goes down. This tendency is explained from the difference of ^{238}U epithermal absorption cross section obtained by JAERI from that by ANL.

In this three-dimensional calculation, computing time was less than 100 sec CPU for FACOM-230-75 computer.

3.5 Studies of 2 MW Reactor Conversion from HEU to LEU Fuel (IAEA-Benchmark Problems)

3.5.1 Purpose

This is one of the IAEA benchmark problems reported in " U.S. CONTRIBUTIONS to IAEA GUIDEBOOK".

According to the above report, the purpose of these studies was to provide an indication of (1) what type of reactor conversion could be feasible for reactors of this type either with current technology or with technology under development, (2) what performance and characteristics could be expected from the converted core, and (3) what methods could be followed to evaluate the conversion.

As shown in Figs. 3, 4 and 5, the burn-up dependent core performance calculation method at JAERI differs from the ANL's one. Therefore, for these benchmark problems, we modefined our calculational scheme to be able to compare our results with those described in the ANL report. Effective multiplication factors and produced plutonium of BOL and EOL were compared.

3.5.2 Method

Firstly, cell burn-up calculation were carried out to express burn-up dependent macroscopic cross sections as a function of ^{235}U depletion. Obtained the cell averaged macroscopic cross section of each region in the core, three-dimensional diffusion calculations were performed with the DIFFUSION-ACE code to evaluate the effective multiplication factor of the core. The cell and core geometry and mesh specification for this computation are shown in Figs. 19, 20, 21 and 22. The atomic number densities in the cell are given in Table 16.

3.5.3 Results and discussion

The computed results by JAERI are compared with those by ANL in Figs. 23 and 24. The amount of produced plutonium calculated by JAERI is less than that by ANL, and reactivity change from BOL to EOL is also less than that by ANL. This tendency comes from the same reason described in the previous sections.

3.6 Three-Dimensional Burn-up Distribution in the JMTR Core

3.6.1 Purpose

In IAEA benchmark problems, two examples were chosen for demonstration of conversion calculations. Our calculational scheme is, however, not the

same as that of ANL. The differences in the method between JAERI and ANL are as follows:

i) Our scheme contains the super cell calculation.

ii) Our cut-off energies for few group constants differ from those of ANL.

iii) Burn-up dependent atomic number densities of fissile materials are obtained by the core calculation code but not by cell burn-up code.

iv) Burn-up distribution in the core is calculated by three-dimensional diffusion code but not by two-dimensional code.

So that, it may be valuable to show the computed results by our computer system. The JMTR (Japan Material Test Reactor) was chosen for an example to show the three-dimensional burn-up distribution in the core.

3.6.2 Method

The calculational scheme is quite the same as shown in Figs. 3, 4 and 5. The JMTR design parameters are given in Table 17. The unit cell and the super cell configurations are shown in Figs. 25, 26 and 27. The core configuration and mesh specification are shown in Figs. 28, 29 and 30. In addition, atomic number densities of the fresh fuel are given in Table 18. The three-dimensional core burn-up calculation was performed by the computer codes FEDM and COREBURN.

Mixed method of the finite difference and the finite element method is adopted in the FEDM code. The two-dimensional X-Y calcualtion is performed by the finite element method for each layer and the one-dimensional calculation along the Z axis is performed by the finite difference method for each channel. Atomic number densities in each burn-up block in the core are calculated with microscopic cross sections stored in the FG-Table and with computed neutron flux by the FEDM. The burn-up dependent macroscopic cross sections in each calculational block are produced using

the atomic number densities and their microscopic cross sections.

3.6.3 Results

The results of the demonstration calculation are shown in the appendix for the three-dimensional isotope distribution.

4. Conclusion

Several benchmark calculations were performed and the following conclusions were attained.

i) Using our multi-group cross section library MGCL, the computed multiplication factors in light water moderator lattices with low enriched fuel rods are about 0.7% smaller than the measured values.

ii) The computed results on several unit cells by the ANISN and the KENO show a good agreement with each other.

iii) The computed results on TCA lattices by the diffusion code ADC and the Monte Carlo code KENO show a nice agreement with each other.
The results of the above two check calculations justify for us to use Sn code for cell calculations and diffusion code for core calculations.

iv) The epithermal absorption cross section of ^{238}U calculated by JAERI is about 10% less than by ANL.
This has given a reason why the amount of produced plutonium versus ^{235}U burn-up obtained by JAERI is less than that by ANL and the effective multiplication factor calculated by JAERI in the cell with low enriched ^{235}U fuel is larger than that by ANL.

v) The effect of the lumped fission product obtained by JAERI to the multiplication factor is less than that by ANL. This gives a reason why the reactivity decrease calculated by JAERI versus burn-up is less than that by ANL.

Accordance with the above studies, we are going to investigate the method to calculate the following quantities:

i) Resonance absorption cross section of ^{238}U

ii) Lumped fission product

iii) Diffusion coefficient.

Acknowledgement

The authors wish to express their thanks to S. Ohuchi, T. Asaoka and M. Katsuragi for their valuable suggestions and encouragements. Thanks are also rendered to T. Takata, K. Kachi, F. Satoh, T. Sukegawa, T. Ohuchi, Y. Komuro and Miss K. Inoue for their assistance to our task.

This work is performed under the auspices of the Project on Reduced Enrichment Fuel of JAERI.

References

1. M.K. DRAKE, "Data Formats and Porcedures for the ENDF Neutron Cross Section Library", BNL 50274, (1970)
2. K. KOYAMA et al., "ANISN-JR, A One-Dimensional Discrete Ordinates, Code for Neutron And Gamma-Ray Transport Calculations" JAERI-M 6954, (1977)
3. Y. NAITO et al., "A Three-Dimensional Neutron Diffusion Calculation Code: DIFFUSION-ACE", JAERI 1262, (1979)
4. O. OZER, "Program RESEND", BNL 17134, (1972)
5. R.Q. WRIGHT et al., "SUPERTOG: A Program to Generate Group Constants and Pn Scattering Marices from ENDF/B", ORNL-TM-2679 (1969)
6. H.C. HONECK and D.R. FINCH, "FLANGE II: A Code to Produce Thermal Neutron Data from an ENDF/B Tape", DP-2179 (1971)
7. J.D. MACDOUGALL, "PIXSE", AEEW-M318 (1963)
8. H. TSURUTA et al., "Critical Sizes of Light-Water Moderated UO_2 and PuO_2-UO_2 Lattice", JAERI 1254, (1978)
9. L.M. PERTIE and N.F. CROSS, "KENO IV-An improved Monte Carlo Criticality Program", ORNL 4938 (1975)
10. M. AKIMOTO and Y. NAITO, "A General Dimensional Neutron Diffusion Calculation Code: ADC", JAERI-1260 (1978)
11. EPRI-CELL Code supplied to Argonne National Laboratory by Electric Power Research Institute, Palo-Alton, California, 1977.

Table 1 Computer Codes Used in the Benchmark Calculation at JAERI

Name	Comments
Cross Section Generation	
RESEND-D	to produce temperature dependent ultra fine point data from an ENDF/B - tape
FINESPEC	to calculate ultra fine neutron energy spectrum
SUPERTOG	to generate fine group constants and Pn scattering matrices from ENDF/B
FLANGE	to process thermal neutron data from an ENDF/B
PIXSE	to process thermal neutron data
MAIL	to produce cross section library for ANISN and KENO-4
Transport Codes	
ANISN	one-dimensional discrete ordinate transport code
KENO-4	improved Monte Carlo criticality program
Diffusion Codes	
ADC	general dimensional neutron diffusion calculation code
DIFFUSION-ACE	three dimensional neutron diffusion calculation code with leakage iterative method
FEDM	mixed method of two-dimensional finite element and finite difference method

Table 2 Standard energy group structure at JAERI

Group NO.	Upper Energy Boundary	Lethergy width ΔU	Group NO.	Upper Energy Boundary	Lethergy width ΔU
1	16.487 Mev	0.125	37	183.16 Kev	0.125
2	14.550	0.125	38	161.63	0.125
3	12.840	0.125	39	142.64	0.125
4	11.331	0.125	40	125.88	0.125
5	10.000	0.125	41	111.09	0.125
6	8.825	0.125	42	98.037	0.125
7	7.788	0.125	43	86.517	0.125
8	6.8729	0.125	44	76.351	0.125
9	6.0653	0.125	45	67.379	0.125
10	5.3526	0.125	46	59.462	0.125
11	4.7237	0.125	47	52.475	0.125
12	4.1686	0.125	48	46.309	0.125
13	3.6788	0.125	49	40.868	0.125
14	3.2465	0.125	50	36.066	0.125
15	2.8650	0.125	51	31.828	0.125
16	2.5284	0.125	52	28.088	0.125
17	2.2313	0.125	53	24.788	0.125
18	1.9691	0.125	54	21.875	0.125
19	1.7377	0.125	55	19.305	0.125
20	1.5335	0.125	56	17.036	0.125
21	1.3533	0.125	57	15.034	0.25
22	1.1943	0.125	58	11.709	0.25
23	1.0540	0.125	59	9.1188	0.25
24	930.14 Kev	0.125	60	7.1017	0.25
25	820.85	0.125	61	5.5308	0.25
26	724.40	0.125	62	4.3075	0.25
27	639.28	0.125	63	3.3546	0.25
28	564.16	0.125	64	2.6126	0.25
29	497.87	0.125	65	2.0347	0.25
30	439.37	0.125	66	1.5846	0.25
31	387.74	0.125	67	1.2341	0.25
32	342.18	0.125	68	961.12 ev	0.25
33	301.97	0.125	69	748.52	0.25
34	266.49	0.125	70	582.95	0.25
35	235.18	0.125	71	454.00	0.25
36	207.54	0.125	72	353.58	0.25

Table 2 (Continued)

	Group NO.	Upper Energy Boundary	Lethergy width ΔU		Group NO.	Upper Energy Boundary	Lethergy width ΔV
	73	275.36 ev	0.25	18	110	0.29792 ev	270 m/sec
	74	214.45	0.25	19	111	0.27699	270
	75	167.02	0.25	20	112	0.25683	270
	76	130.07	0.25	21	113	0.23742	270
	77	101.30	0.25	22	114	0.21878	270
	78	78.893	0.25	23	115	0.20090	270
	79	61.442	0.25	24	116	0.18378	270
	80	47.851	0.25	25	117	0.16743	270
	81	37.267	0.25	26	118	0.15183	270
	82	29.023	0.25	27	119	0.13700	270
	83	22.603	0.25	28	120	0.12293	270
	84	17.603	0.25	29	121	0.10962	270
	85	13.710	0.25	30	122	0.09708	270
	86	10.677	0.25	31	123	0.085295	270
	87	8.3153	0.25	32	124	0.074274	270
	88	6.4760	0.25	33	125	0.064015	270
	89	5.0435	0.25	34	126	0.054518	270
Thermal	90	3.9279	0.25	35	127	0.045783	270
Group	91	3.0590	0.25	36	128	0.037811	270
NO.	92	2.3824	0.25	37	129	0.030600	270
1	93	1.8554	0.125	38	130	0.024152	270
2	94	1.6374	0.125	39	131	0.018465	270
3	95	1.4450	0.125	40	132	0.013541	270
4	96	1.2752	0.125	41	133	0.009379	270
5	97	1.1254	0.125	42	134	0.005979	270
6	98	0.99312	0.125	43	135	0.003341	270
7	99	0.87642	0.125	44	136	0.001466	270
8	100	0.77344	0.125	45	137	0.000352	270
9	101	0.68256	0.125			0.000033	270
10	102	0.60236	0.125				
11	103	0.53158	0.125				
12	104	0.46912	0.125				
13	105	0.41399	270 m/sec				
14	106	0.38925	270				
15	107	0.36528	270				
16	108	0.34206	270				
17	109	0.31961	270				

Table 3 Fuel specification of TCA

	UO_2	PuO_2-UO_2
Fuel		
Enrichment, w/o	2.596, ^{235}U	3.01±0.05, $\frac{PuO_2}{(PuO_2+UO_2)}$
Isotope ratio, w/o		
Uranium		Natural
^{235}U	2.596	
^{238}U	97.404	
Plutonium		
^{238}Pu	—	0.494 (1971-8-19)*
^{239}Pu	—	68.18 (1971-8-19)
^{240}Pu	—	22.02 (1971-8-19)
^{241}Pu	—	7.26 (1971-8-19)
^{242}Pu	—	2.04 (1971-8-19)
Americium		
^{241}Am	—	530 ppm (1971-8-16) in PuO_2
Impurity content	—	$0.90^{+0.09}_{-0.12}$ ppm equivalent boron concentration in PuO_2-UO_2
O/M	2.04	2.07
Pellet		
Fabrication method	Sintered	Mechanically blended and pre-sintered
Diameter, mm	12.50	10.65
Density, g/cm³	10.40	6.056±0.076
Stack length, mm	1441.5±3	706±3
Cladding		
Material	Al	Zircaloy-2
Inner diameter, mm	12.65	10.83±0.06
Thickness, mm	0.76	0.70±0.07

* Date of assaying.

Table 4 Name of TCA lattice

Lattice name	H/U or H/Pu	Lattice pitch (cm)
1.50U	4.33	1.849
1.83U	5.28	1.956
2.48U	7.16	2.150
3.00U	8.65	2.293
2.42PU	402	1.825
2.98PU	494	1.956
4.24PU	703	2.225
5.55PU	921	2.474

Table 5.1 Atomic number densities

Region	Material	Atomic number density at 20℃ ($\times 10^{24}$ atoms/cm^3)	
		2.6 w/o UO_2	3.0 w/o PuO_2-UO_2
Fuel	^{234}U	—	7.436×10^{-7}
	^{235}U	6.086×10^{-4}	9.393×10^{-5}
	^{238}U	2.255×10^{-2}	1.295×10^{-2}
	^{238}Pu	—	2.000×10^{-6}
	^{239}Pu	—	2.749×10^{-4}
	^{240}Pu	—	8.843×10^{-5}
	^{241}Pu	—	2.903×10^{-5} *)
	^{242}Pu	—	8.124×10^{-6}
	^{241}Am	—	2.121×10^{-7} *)
	O	4.725×10^{-2}	2.784×10^{-2}
Cladding (with air gap)	Aluminum	5.587×10^{-2}	—
	Zircaloy-2	—	3.840×10^{-2}
Moderator	H_2O	3.338×10^{-2}	
	B		
	72 ppm	4.024×10^{-6}	
	147 〃	8.155×10^{-6}	
	345 〃	1.919×10^{-5}	
	554 〃	3.082×10^{-5}	

*) Date of assaying; on 1971-8-16.

Table 5.2 Atomic number densities of ^{241}Pu and ^{241}Am as a function of time

Date	Elapsed time (days)	Atomic number density ($\times 10^{24}$ atoms/cm^3)	
		^{241}Pu	^{241}Am
1971-8-19	0	2.903×10^{-5}	2.121×10^{-7}
1972-4-1	226	2.819	1.059×10^{-6}
1973-4-1	591	2.687	2.374
1974-4-1	956	2.562	3.629
1975-4-1	1321	2.442	4.824
1976-4-1	1686	2.328	5.964
1977-4-1	2051	2.219	7.051

Table 6 Reflector savings

Lattice name	Vertical (cm)	Horizontal (cm)
1.50U	12.6±0.3	17.0±0.8
1.83U	12.2±0.3	13.9±0.8
2.48U	11.3±0.2	13.7±0.5
3.00U	11.1±0.5	14.0±0.8
2.42PU	12.5±0.2	14.6±0.3
2.98PU	12.0±0.2	14.1±0.3
4.24PU	11.6±0.2	13.4±0.2
5.55PU	11.3±0.2	13.1±0.2

Table 7

Energy Groups Used in the Calculation

Group	E_U, eV	E_L, eV
1	1.6487×10^{7}	1.8316×10^{5}
2	1.8316×10^{5}	0.68256
3	0.68256	0.0

Table 8 Comparison of infinite multiplication factors in TCA cells calculated by ANISN-JR with those by KENO-4

K_∞

	ANISN - JR	KENŌ - IV
1.50 U	1.3554	1.3541 ± 0.00306
1.83 U	1.3703	1.3699 ± 0.00274
2.48 U	1.3695	1.3651 ± 0.00275
3.00 U	1.3540	1.3438 ± 0.00293

K_∞ in 1972

	ANISN - JR	KENŌ - IV
2.42 Pu	1.3542	1.3505 ± 0.00297
2.98 Pu	1.3481	1.3511 ± 0.00310
4.24 Pu	1.3046	1.3081 ± 0.00275
5.55 Pu	1.2469	

K_∞ in 1973

	ANISN - JR	KENŌ - IV
2.42 Pu	1.3499	1.3531 ± 0.00318
2.98 Pu	1.3439	1.3441 ± 0.00307
4.24 Pu	1.3005	1.3041 ± 0.00269
5.55 Pu	1.2430	

K_∞ in 1974

	ANISN - JR	KENŌ - IV
2.42 Pu	1.3435	
2.98 Pu	1.3398	1.3402 ± 0.00290
4.24 Pu	1.2966	1.3018 ± 0.00298
5.55 Pu	1.2392	

K_∞ in 1975

	ANISN - JR	KENŌ - IV
2.42 Pu	1.3419	1.3479 ± 0.00313
2.98 Pu	1.3360	1.3358 ± 0.00293
4.24 Pu	1.2929	1.2979 ± 0.00268
5.55 Pu	1.2356	

Table 9 Comparison of effective multiplication factors in TCA Lattices calculated by ANISN-ADC with those by KEWO-4

Pattern	Fuel Rod Array	Critical Water Level(cm)	ANISN-JR ADC K_{eff}	KENO-4 K_{eff}
Lattice Name 1.50 U				
18	19 × 19	99.45	0.99334	0.99463 ± 0.00463
24	22 × 22	53.23	0.99543	0.99450 ± 0.00401
29	25 × 25	40.89	0.99473	0.98707 ± 0.00390
Average K_{eff}			0.99450	0.99207 ± 0.00418
Lattice Name 1.83 U				
3	14 × 24	85.36	0.99224	0.98910 ± 0.00416
6	15 × 19	139.72	0.99205	0.99062 ± 0.00421
18	19 × 19	60.38	0.99387	0.99738 ± 0.00544
Average K_{eff}			0.99272	0.99237 ± 0.00460
Lattice Name 2.48 U				
11	16 × 16	78.67	0.99107	0.99057 ± 0.00429
13	17 × 17	59.96	0.99150	0.98829 ± 0.00422
18	19 × 19	44.55	0.99160	0.99030 ± 0.00422
Average K_{eff}			0.99139	0.98972 ± 0.00424
Lattice Name 3.00 U				
5	16 × 16	90.75	0.99034	0.98783 ± 0.00435
13	17 × 17	52.87	0.99128	0.98311 ± 0.00375
18	19 × 19	41.54	0.99125	0.99319 ± 0.00392
Average K_{eff}			0.99096	0.98804 ± 0.00401
Average K_{eff} of UO_2 System			0.99239	0.99055 to 12 cases 0.99265 to 40 cases

Table 9 (Continued)

Pattern	Fuel Rod Array	Date	Critical Water Level(cm)	ANISN-JR ADC K_{eff}	KENO-4 K_{eff}
Lattice Name 2.42 Pu					
26	23 × 23	72-6- 7	59.55	0.99271	0.99699 ± 0.00438
26	23 × 23	75-5-16	66.46	0.99494	0.99302 ± 0.00408
28	24 × 24	72-6- 7	53.30	0.99220	0.99635 ± 0.00445
28	24 × 24	74-5-14	56.68	0.99429	0.99346 ± 0.00419
28	24 × 24	75-5-16	58.36	0.99429	1.00145 ± 0.00445
Average K_{eff}				0.99369	0.99625 ± 0.00431
Lattice Name 2.98 Pu					
21	20 × 21	72-5-18	67.10	0.99361	0.98949 ± 0.00390
22	21 × 21	72-5-18	61.50	0.99249	0.99847 ± 0.00419
22	21 × 21	73-5-22	64.39	0.99400	0.98760 ± 0.00424
22	21 × 21	74-5-28	66.87	0.99460	0.99403 ± 0.00416
23	21 × 22	72-5-18	57.38	0.99206	0.98698 ± 0.00377
23	21 × 22	75-5-21	63.88	0.99461	0.99417 ± 0.00439
26	23 × 23	74-5-28	51.94	0.99378	0.99538 ± 0.00419
28	24 × 24	75-5-21	48.68	0.99363	0.99445 ± 0.00436
Average K_{eff}				0.99360	0.99257 ± 0.00415

Table 9 (Continued)

Pattern	Fuel Rod Array	Date	Critical Water Level(cm)	ANISN-JR ADC K_{eff}	KENO-4 K_{eff}
Lattice Name 4.24 Pu					
20	20 × 20	72-4-13	60.32	0.99332	0.99182 ± 0.00405
20	20 × 20	75-5-28	68.18	0.99607	0.99635 ± 0.00445
22	21 × 21	75-5-28	59.05	0.99576	0.99634 ± 0.00411
24	22 × 22	74-6- 6	51.74	0.99512	0.99219 ± 0.00404
28	24 × 24	75-5-28	45.62	0.99493	0.99931 ± 0.00421
Average K_{eff}				0.99504	0.99520 ± 0.00417
Lattice Name 5.55 Pu					
22	21 × 21	72-4-28	62.05	0.99532	0.99246 ± 0.00374
23	21 × 22	72-4-26	58.73	0.99494	0.98709 ± 0.00388
23	21 × 22	73-6- 6	61.10	0.99601	0.99709 ± 0.00368
24	22 × 22	73-6- 6	58.08	0.99593	0.99620 ± 0.00391
Average K_{eff}				0.99555	0.99321 ± 0.00380
Average K_{eff} of PuO_2 System				0.99430	0.99412

Table 10 Energy Groups Used in the Calculations

Group	E_U, eV	E_L, eV
1	16.487×10^6	5.5308×10^3
2	5.5308×10^3	0.68256
3	0.68256	0.000033

Table 11-1. Cross Section vs. ^{235}U Burnup for 93% Enrichment Case

Burnup (%)	Group	^{235}U		^{238}U		^{239}Pu	
		σ_a	σ_f	σ_a	σ_f	σ_a	σ_f
0	1	1.7198	1.4669	0.38927	0.23491	1.9475	1.7721
	2	39.025	25.759	24.534	6.6775-5	46.280	27.325
	3	431.85	368.36	1.8176	9.9968-9	1059.4	711.67
5	1	1.7202	1.4671	0.38931	0.23488	1.9477	1.7721
	2	39.155	25.835	24.563	6.6648-5	46.316	27.350
	3	431.70	368.22	1.8166	1.0032-8	1061.3	712.72
10	1	1.7199	1.4669	0.38925	0.23488	1.9476	1.7721
	2	39.267	25.897	24.583	6.6620-5	46.334	27.361
	3	435.63	371.61	1.8311	9.8526-9	1057.5	711.37
15	1	1.7199	1.4669	0.38925	0.23487	1.9476	1.7721
	2	39.393	25.969	24.609	6.6530-5	46.363	27.381
	3	439.69	375.11	1.8460	9.6681-9	1053.5	710.01
20	1	1.7203	1.4672	0.38929	0.23482	1.9477	1.7721
	2	39.53	26.048	24.639	6.6397-5	46.402	27.408
	3	443.86	378.71	1.8614	9.4794-9	1049.5	708.63
25	1	1.7203	1.4672	0.38928	0.23480	1.9477	1.7721
	2	39.663	26.124	24.666	6.6299-5	46.435	27.430
	3	448.19	382.45	1.8773	9.2851-9	1045.3	702.21
30	1	1.7200	1.4670	0.38924	0.23483	1.9476	1.7721
	2	39.787	26.193	24.688	6.6253-5	46.456	27.444
	3	452.67	386.30	1.8937	9.0861-9	1041.1	705.76
35	1	1.7201	1.4670	0.38925	0.23482	1.9476	1.7721
	2	39.926	26.272	24.716	6.6150-5	46.488	27.466
	3	457.29	390.29	1.9106	8.8812-9	1036.7	704.27
40	1	1.7205	1.4673	0.38926	0.23474	1.9477	1.7721
	2	40.074	26.357	24.747	6.6017-5	46.528	27.493
	3	462.09	394.43	1.9282	8.6695-9	1032.2	702.74
45	1	1.7202	1.4671	0.38923	0.23478	1.9476	1.7721
	2	40.217	26.439	24.771	6.5958-5	46.552	27.509
	3	467.10	398.74	1.9464	8.4523-9	1027.5	701.18
50	1	1.7206	1.4673	0.38924	0.23471	1.9478	1.7720
	2	40.380	26.533	24.804	6.5816-5	46.593	27.537
	3	477.24	403.17	1.9652	8.2280-9	1022.7	699.58

Table 11-2 Cross Section vs. ^{235}U Burnup for 45% Enrichment Case

Burnup (%)	Group	^{235}U		^{238}U		^{239}Pu	
		σ_a	σ_f	σ_a	σ_f	σ_a	σ_f
0	1	1.7204	1.4672	0.38893	0.23439	1.9475	1.7718
	2	38.529	25.463	9.1977	6.7958-5	45.904	27.074
	3	421.15	359.14	1.1781	1.0491-8	1069.7	715.21
5	1	1.7205	1.4672	0.38891	0.23436	1.9475	1.7718
	2	38.653	25.533	9.2043	6.7885-5	45.929	27.091
	3	420.80	358.83	1.7763	1.0539-8	1071.8	716.30
10	1	1.7206	1.4672	0.38889	0.23432	1.9476	1.7718
	2	38.781	25.605	9.2112	6.7800-5	45.959	27.110
	3	424.71	362.2	1.7907	1.0360-8	1067.7	714.84
15	1	1.7206	1.4672	0.38891	0.23434	1.9476	1.7718
	2	38.913	25.679	9.2186	6.7704-5	45.991	27.132
	3	428.76	365.7	1.8057	1.0174-8	1063.6	713.37
20	1	1.7206	1.4673	0.38891	0.23431	1.9476	1.7718
	2	39.047	25.754	9.2261	6.7607-5	46.024	27.154
	3	433.0	369.35	1.8213	9.9805-9	1059.3	711.85
25	1	1.7207	1.4673	0.38890	0.23429	1.9476	1.7718
	2	39.183	25.831	9.2334	6.7511-5	46.056	27.175
	3	437.38	373.13	1.8374	9.7821-9	1055.0	710.33
30	1	1.7207	1.4673	0.38888	0.23425	1.9476	1.7718
	2	39.320	25.907	9.2406	6.7426-5	46.087	27.195
	3	441.96	377.07	1.8542	9.5760-9	1050.5	708.78
35	1	1.7208	1.4673	0.38887	0.23423	1.9476	1.7718
	2	39.464	25.987	9.2486	6.7321-5	46.121	27.218
	3	446.71	381.17	1.8716	9.3632-9	1045.9	707.20
40	1	1.7208	1.4674	0.38886	0.23421	1.9476	1.7717
	2	39.610	26.068	9.2566	6.7218-5	46.156	27.241
	3	451.66	385.44	1.8897	9.1427-9	1041.2	705.58
45	1	1.7212	1.4676	0.38888	0.23415	1.9477	1.7717
	2	39.769	26.157	9.2663	6.7071-5	46.200	27.270
	3	456.81	389.88	1.9086	8.9143-9	1036.3	703.93
50	1	1.7212	1.4676	0.38888	0.23415	1.9478	1.7717
	2	39.929	26.249	9.2747	6.6964-5	46.235	27.294
	3	462.22	394.54	1.9283	8.6785-9	1031.3	702.25

Table 11-3 Cross Section vs. ^{235}U Burnup for 20% Enrichment Case

Burnup (%)	Group	^{235}U		^{238}U		^{239}Pu	
		σ_a	σ_f	σ_a	σ_f	σ_a	σ_f
0	1	1.7221	1.4680	0.38828	0.23330	1.9477	1.7712
	2	37.840	25.051	4.6925	6.9305-5	45.478	26.786
	3	404.09	344.43	1.7148	1.1296-8	1086.4	720.98
5	1	1.7222	1.4680	0.38826	0.23327	1.9477	1.7712
	2	37.972	25.125	4.6946	6.9235-5	45.504	26.802
	3	403.36	343.80	1.7116	1.1371-8	1088.7	722.10
10	1	1.7222	1.4680	0.38826	0.23326	1.9477	1.7712
	2	38.111	25.203	4.6971	6.9136-5	45.537	26.824
	3	407.15	347.07	1.7256	1.1195-8	1084.2	720.39
15	1	1.7223	1.468	0.38826	0.23324	1.9477	1.7714
	2	38.25	25.279	4.6997	6.9042-5	45.570	26.846
	3	411.17	350.54	1.7405	1.1008-8	1079.7	718.65
20	1	1.7226	1.4683	0.38828	0.23319	1.9478	1.7712
	2	38.398	25.361	4.7030	6.8907-5	45.609	26.873
	3	415.34	354.14	1.7559	1.0815-8	1075.1	716.96
25	1	1.7224	1.4681	0.38825	0.23320	1.9477	1.7712
	2	38.534	25.433	4.7051	6.885-5	45.424	26.782
	3	419.76	357.95	1.7722	1.0612-8	1069.7	714.86
30	1	1.7225	1.4681	0.38821	0.23313	1.9477	1.7711
	2	38.681	25.513	4.7081	6.8745-5	45.432	26.791
	3	424.37	361.92	1.7891	1.0401-8	1064.7	712.97
35	1	1.7225	1.4682	0.38822	0.23315	1.9477	1.7712
	2	38.833	25.595	4.7104	6.8638-5	45.445	2.6802
	3	429.19	366.08	1.8069	1.0181-8	1059.8	711.22
40	1	1.7225	1.4682	0.38821	0.23312	1.9478	1.7711
	2	38.987	25.677	4.7134	6.8536-5	45.460	26.815
	3	434.25	370.44	1.8255	9.9516-9	1054.8	709.46
45	1	1.7226	1.4682	0.38821	0.23310	1.9478	1.7711
	2	39.147	25.764	4.7166	6.8424-5	45.483	26.831
	3	439.58	375.04	1.8450	9.7107-9	1049.6	707.66
50	1	1.7227	1.4683	0.38821	0.23308	1.9478	1.7711
	2	39.315	25.855	4.7201	6.8296-5	45.513	26.852
	3	445.16	379.84	1.8654	9.4615-9	1044.3	705.88

Table 12-1 Atom Densities in 93% Enriched Fuel Meat vs. ^{235}U Burnup
Atomic Number Density (burn·cm)$^{-1}$

Burnup(%)	Al	^{135}Xe	^{149}Sm	^{235}U	^{236}U	^{238}U
0	5.7011-2	0.0	0.0	1.6179-3	0.0	1.2020-4
5	5.7011-2	1.4633-8	1.6931-7	1.5370-3	1.3335-5	1.1980-4
10	5.7011-2	1.4022-8	1.6089-7	1.4561-3	2.6603-5	1.1938-4
15	5.7011-2	1.3326-8	1.5189-7	1.3752-3	3.9738-5	1.1895-4
20	5.7011-2	1.2619-8	1.4288-7	1.2943-3	5.2753-5	1.1851-4
25	5.7011-2	1.1904-8	1.3389-7	1.2134-3	6.5637-5	1.1807-4
30	5.7011-2	1.1180-8	1.2493-7	1.1325-3	7.8388-5	1.1762-4
35	5.7011-2	1.0449-8	1.1600-7	1.0516-3	9.1006-5	1.1716-4
40	5.7011-2	9.7073-9	1.0708-7	9.7074-4	1.0348-4	1.1669-4
45	5.7011-2	8.9558-9	9.8161-8	8.8985-4	1.1581-4	1.1621-4
50	5.7011-2	8.1964-9	8.9277-8	8.0895-4	1.2800-4	1.1571-4
				7.2806-4		1.1534-4

Burnup(%)	^{239}Pu	^{240}Pu	^{241}Pu	^{242}Pu
0	0.0	0.0	0.0	0.0
5	3.7183-7	7.1357-9	3.3242-10	2.6409-12
10	7.1845-7	2.7539-8	2.6141-9	4.3352-11
15	1.0250-6	5.9034-8	8.3887-9	2.2090-10
20	1.2924-6	9.9461-8	1.8744-8	6.9709-10
25	1.5217-6	1.4689-7	3.4338-8	1.6944-9
30	1.7146-6	1.9958-7	5.5434-8	3.4945-9
35	1.8727-6	2.5600-7	8.1946-8	6.4380-9
40	1.9966-6	3.1475-7	1.1343-7	1.0926-8
45	2.0869-6	3.7462-7	1.4916-7	1.7430-8
50	2.1454-6	4.3445-7	1.8816-7	2.6502-8
	2.3920-6	4.4014-7	2.1872-7	2.8201-8

Table 12-2 Atom Densities in 45% Enriched Fuel Meat vs ^{235}U Burnup
Atomic Number Density (burn·cm)$^{-1}$

Burnup(%)	Al	^{135}Xe	^{149}Sm	^{235}U	^{236}U	^{238}U
0	5.3691-2	0.0	0.0	1.8490-3	0.0	2.2314-3
5	5.3691-2	1.6548-8	1.9532-7	1.7566-3	1.5442-5	2.2278-3
10	5.3691-2	1.5925-8	1.8633-7	1.6641-3	3.0818-5	2.2240-3
15	5.3691-2	1.5189-8	1.7641-7	1.5717-3	4.6023-5	2.2201-3
20	5.3691-2	1.4437-8	1.6645-7	1.4792-3	6.1085-5	2.2161-3
25	5.3691-2	1.3672-8	1.5646-7	1.3868-3	7.5970-5	2.2121-3
30	5.3691-2	1.2891-8	1.4645-7	1.2943-3	9.0707-5	2.2079-3
35	5.3691-2	1.2097-8	1.3642-7	1.2019-3	1.0526-4	2.2036-3
40	5.3691-2	1.1287-8	1.2635-7	1.1094-3	1.1966-4	2.1992-3
45	5.3691-2	1.0464-8	1.1628-7	1.0170-3	1.3387-4	2.1946-3
50	5.3691-2	9.6228-9	1.0616-7	9.245 -4	1.4790-4	2.1899-3

Burnup(%)	^{239}Pu	^{240}Pu	^{241}Pu	^{242}Pu
0	0.0	0.0	0.0	0.0
5	3.2201-6	6.3783-8	3.2482-9	2.5994-11
10	6.2287-6	2.4536-7	2.5531-8	4.2672-10
15	8.8990-6	5.2369-7	8.1695-8	2.1672-9
20	1.1249-5	8.7952-7	1.8226-7	6.8265-9
25	1.3285-5	1.2946-6	3.3307-7	1.6546-8
30	1.5023-5	1.7546-6	5.3676-7	3.4058-8
35	1.6470-5	2.2451-6	7.9164-7	6.5284-8
40	1.7638-5	2.7556-6	1.0940-6	1.0866-7
45	1.8534-5	3.2746-6	1.4360-6	1.7131-7
50	1.9163-5	3.7944-6	1.8085-6	2.5854-7

Table 12-3 Atom Densities in 20% Enriched Fuel Meat vs ^{235}U Burnup
Atomic Number Density (burn·cm)$^{-1}$

Burnup(%)	Al	^{135}Xe	^{149}Sm	^{235}U	^{236}U	^{238}U
0	3.8170-2	0	0	2.2536-3	0	8.9005-3
5	3.8170-2	1.9840-8	2.4291-7	2.1409-3	1.9245-5	8.8904-3
10	3.8170-2	1.9220-8	2.3317-7	2.0282-3	3.8390-5	8.8797-3
15	3.8170-2	1.8432-8	2.2173-7	1.9156-3	5.7319-5	8.8689-3
20	3.8170-2	1.7617-8	2.1013-7	1.8029-3	7.6050-5	8.8570-3
25	3.8170-2	1.6779-8	1.9839-7	1.6902-3	9.4562-5	8.8459-3
30	3.8170-2	1.5918-8	1.8657-7	1.5775-3	1.1285-4	8.8339-3
35	3.8170-2	1.5032-8	1.7464-7	1.4648-3	1.3091-4	8.8241-3
40	3.8170-2	1.4123-8	1.6262-7	1.3522-3	1.4872-4	8.8112-3
45	3.8170-2	1.3187-8	1.5050-7	1.2395-3	1.6630-4	8.7977-3
50	3.8170-2	1.2226-8	1.3828-7	1.1268-3	1.8362-4	8.7835-3
		1.2673-8	1.4070-7			8.7767-3

Burnup(%)	^{239}Pu	^{240}Pu	^{241}Pu	^{242}Pu
0	0	0	0	0
5	8.6929-6	1.8097-7	1.0564-8	8.5611-11
10	1.6795-5	6.9003-7	8.2624-8	1.3976-9
15	2.4013-5	1.4613-6	2.6329-7	7.0665-9
20	3.0391-5	2.4358-6	5.8450-7	2.2153-8
25	3.5955-5	3.5613-6	1.0637-6	5.3744-8
30	4.0753-5	4.7919-6	1.7053-6	1.0950-7
35	4.4807-5	6.0925-6	2.5029-6	2.0026-7
40	4.8141-5	7.4311-6	3.4399-6	3.3723-7
45	5.0786-5	8.7839-6	4.4939-6	5.3397-7
50	5.2759-5	1.0128-5	5.6322-6	8.0562-7
	5.5380-5	9.9327-6	6.238-6	8.2879-7

Table 13 Valves of keff from X-Y Diffusion Theory Calculations

Enrichment	Description	keff	
		JAERI	ANL
93%	BOL Benchmark	1.04199	1.02333
93%	EOL Benchmark	1.02195	1.00038
93%	Fresh Fuel in All Fuel Regions	1.18104	1.18343
45%	BOL Benchmark	1.04893	1.02471
45%	EOL Benchmark	1.03058	1.00331
45%	Fresh Fuel in All Fuel Regions	1.18107	1.17817
20%	BOL Benchmark	1.05782	1.02127
20%	EOL Benchmark	1.04122	1.00142
20%	Fresh Fuel in All Fuel Regions	1.18339	1.16830

Table 14 Survey of ^{235}U Loading with Uranium Enrichment of 20%, 45% and 93% - Atom Number Density ($\times 10^{-24}$)

93% Enrichment U-Aℓ Alloy

^{235}U/Element, g	140	180	220	260	300
U-235	9.7906×10^{-4}	1.2584×10^{-3}	1.5404×10^{-3}	1.8197×10^{-3}	2.0991×10^{-3}
U-238	7.3389×10^{-5}	9.3635×10^{-5}	1.1388×10^{-4}	1.3413×10^{-4}	1.5690×10^{-4}
Aℓ	5.5855×10^{-2}	5.5526×10^{-2}	5.5206×10^{-2}	5.4796×10^{-2}	5.4509×10^{-2}

45% Enrichment $UA\ell_x$-Aℓ

^{235}U/Element, g	150	197	247	300	357
U-235	1.0483×10^{-3}	1.3789×10^{-3}	1.7274×10^{-3}	2.1016×10^{-3}	2.5051×10^{-3}
U-238	1.2628×10^{-3}	1.6652×10^{-3}	2.0853×10^{-3}	2.5357×10^{-3}	3.0191×10^{-3}
Aℓ	5.2605×10^{-2}	5.1560×10^{-2}	5.0334×10^{-2}	4.9078×10^{-2}	4.7808×10^{-2}

20% Enrichment $UA\ell_x$-Aℓ

^{235}U/Element, g	163	221	289	371	475
U-235	1.1380×10^{-3}	1.5480×10^{-3}	2.0248×10^{-3}	2.5963×10^{-3}	3.3216×10^{-3}
U-238	4.4945×10^{-3}	6.1141×10^{-3}	7.9969×10^{-3}	1.0254×10^{-2}	1.3119×10^{-2}
Aℓ	4.7771×10^{-2}	4.4725×10^{-2}	4.1275×10^{-3}	3.7062×10^{-2}	3.1731×10^{-2}

Aℓ Clad and H_2O Moderator

Aℓ	6.0260×10^{-2}
O	3.3428×10^{-2}
H	6.6856×10^{-2}

Table 15 Survey of ^{235}U Loading with Uranium Enrichment of 20%, 45% and 93% - Excess Reactivity

93% Enrichment U-Aℓ Alloy

^{235}U/Element,g	140	180	220	260	300
k_{eff}(by ANL)	0.9869	1.0521	1.0983	1.1327	1.1592
k_{eff}(by JAERI)	0.9920	1.0558	1.1012	1.1345	1.1601

45% Enrichment $UA\ell_x$-Aℓ

^{235}U/Element,g	150	197	247	300	357
k_{eff}(by ANL)	0.9869	1.0521	1.0983	1.1327	1.1592
k_{eff}(by JAERI)	0.9969	1.0558	1.1063	1.1404	1.1667

20% Enrichment $UA\ell_x$-Aℓ

^{235}U/Element,g	163	221	289	371	475
k_{eff}(by ANL)	0.9869	1.0521	1.0983	1.1327	1.1592
k_{eff}(by JAERI)	1.0008	1.0662	1.1133	1.1487	1.1771

Table 16 2 MW and 10 MW Atom Number Densities for 93% and 20% Fuel Enrichment (Standard Fuel Element and Control Fuel Element)

2 MW Reactor

	93% (10^{-24})		20% (10^{-24})	
	SFE	CFE	SFE	CFE
U-235	1.2584×10^{-3}	9.9444×10^{-4}	1.4917×10^{-3}	1.1764×10^{-3}
U-238	9.3635×10^{-5}	7.3389×10^{-5}	5.8914×10^{-3}	4.6488×10^{-3}
Aℓ	5.5526×10^{-2}	5.5885×10^{-2}	4.5110×10^{-2}	4.7445×10^{-2}

10 MW Reactor

	93% (10^{-24})		20% (10^{-24})	
	SFE	CFE	SFE	CFE
U-235	1.9606×10^{-3}	1.4481×10^{-3}	2.1913×10^{-3}	1.6352×10^{-3}
U-238	1.468×10^{-4}	1.0882×10^{-4}	8.6524×10^{-3}	6.3798×10^{-3}
Aℓ	5.4778×10^{-2}	5.5319×10^{-2}	4.009×10^{-2}	4.4208×10^{-2}

Aℓ Clad	6.0260×10^{-2}
O	3.3428×10^{-2}
H	6.6856×10^{-2}

Table 17 JMTR-Description of Design Parameters Used in Demonstration Calculations

Reactor Design Description

Reactor Type	Tank-Type MTR
Steady-State Power Level	50 MW
Number of Standard Fuel Element	27
Irradiation Channels	8 at Core Center
Core Geometry	5 × 7 Arrangement
Grid Plate	12 × 12
^{235}U Content/Core	7657 g (Case 1) 8632 g (Case 2)
Active Core Volume	116 ℓ
Average Volumetric Power Density	43.1 KW/ℓ
Specific Power	6637 KW/kg ^{235}U (Case 1) 5888 KW/kg ^{235}U (Case 2)
Moderator, Coolant	Water
Reflector	Beryllium and Aluminium on All Four Sides

Fuel Element Design Description

Type	MTR, Straight Plates
Uranium Enrichment	93% (Case 1) 45% (Case 2)
Lattice Pitch	77.2 × 77.2 mm
Fuel Element Dimensions	76.2 × 76.2 × 750 mm
Plate Thickness	1.27 mm
Water Channel Thickness	2.604 mm
Plate/Standard Fuel Element	19
Fuel Meat	U-Aℓ Alloy (21.5 wt·%U) (Case 1) U-Aℓ Alloy (40 wt·%U) (Case 2)
Meat Dimensions	0.51 × 59.5 × 750 mm
Clad Thickness (Aℓ)	0.38 mm
^{235}U Density in Fuel Meat	0.6414 g/cm^3 (Case 1) 1.1933 g/cm^3 (Case 2)
^{235}U/Standard Fuel Element	283.6 g (Case 1) 319.7 g (Case 2)
Coolant Flow Rate	6000 m^3/h
Core Inlet Temperature	47 °C
Burnup Status of Core	Equilibrium Core

Table 18 Atomic Number Density in Fresh Core

Material			Atomic Number Density ($\times 10^{-24}$ cm^{-3})	
1	Fuel Element		93 %	45 %
	Fuel :	U-235	0.001681	0.001895
		U-238	0.0001884	0.002287
		Aℓ	0.05698	0.05502
	Clad :	Aℓ	0.060299	0.060299
	H_2O	O	0.032973	0.032973
		H	0.065946	0.065946
	Extra :	Aℓ	0.03534	0.03534
		O	0.01365	0.01365
		H	0.02729	0.02729
2	Beryllium Reflector			
		Be	0.1118	0.1118
		O	0.002979	0.002979
		H	0.005957	0.005957
3	Aluminium Reflector (1)			
		Aℓ	0.05221	0.05221
		O	0.004421	0.004421
		H	0.008842	0.008842
4	Aluminium Reflector (2)			
		Aℓ	0.05637	0.05637
		O	0.002149	0.002149
		H	0.004298	0.004298
5	Zirconium Gamma Ray Shielding Plate			
		Zr	0.03636	0.03636
		O	0.004781	0.004781
		H	0.009562	0.009562
6	H_2O			
		O	0.03297	0.03297
		H	0.06595	0.06595

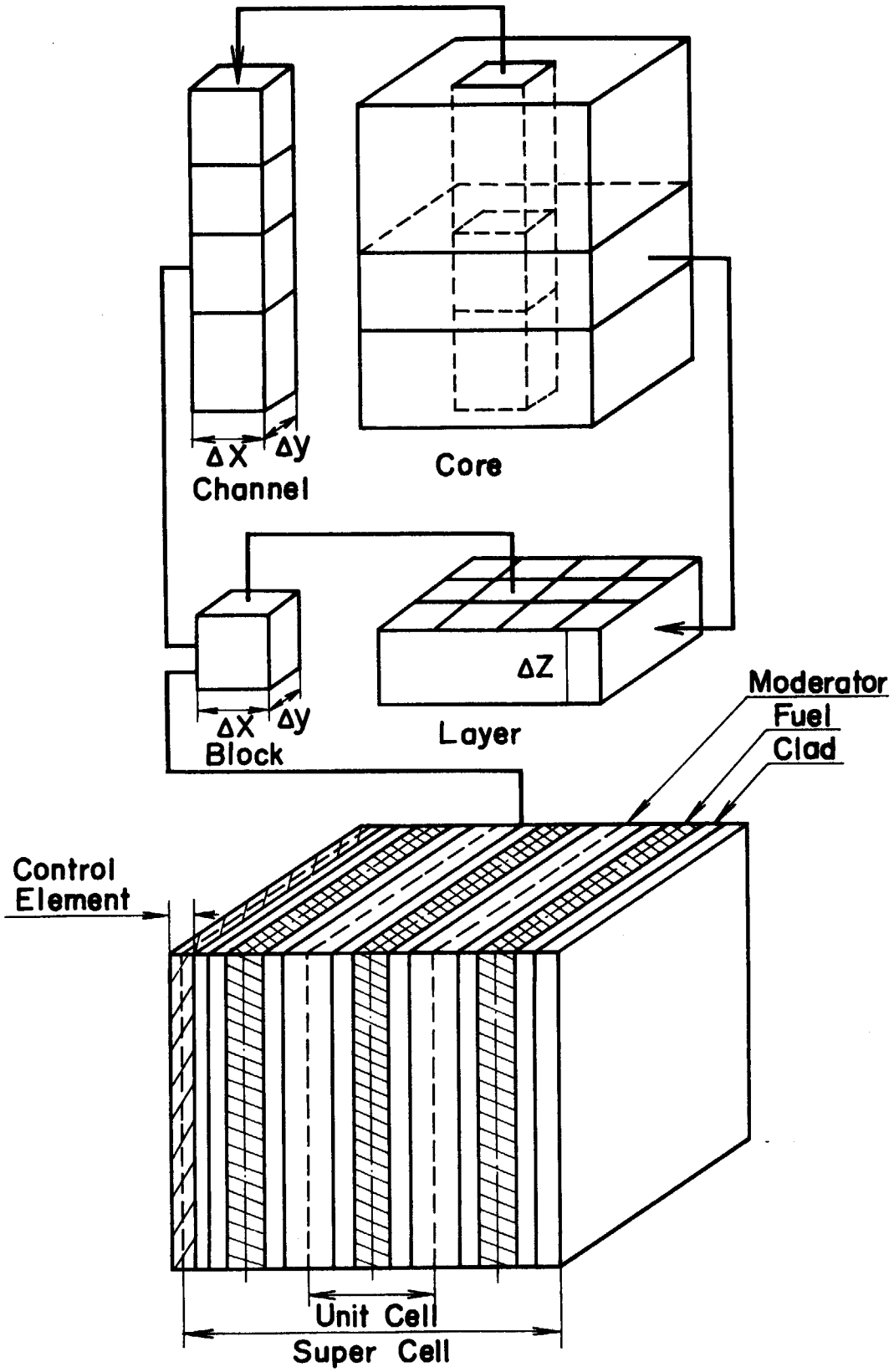

Fig. 1 Configuration of channels, layers, block and super cell

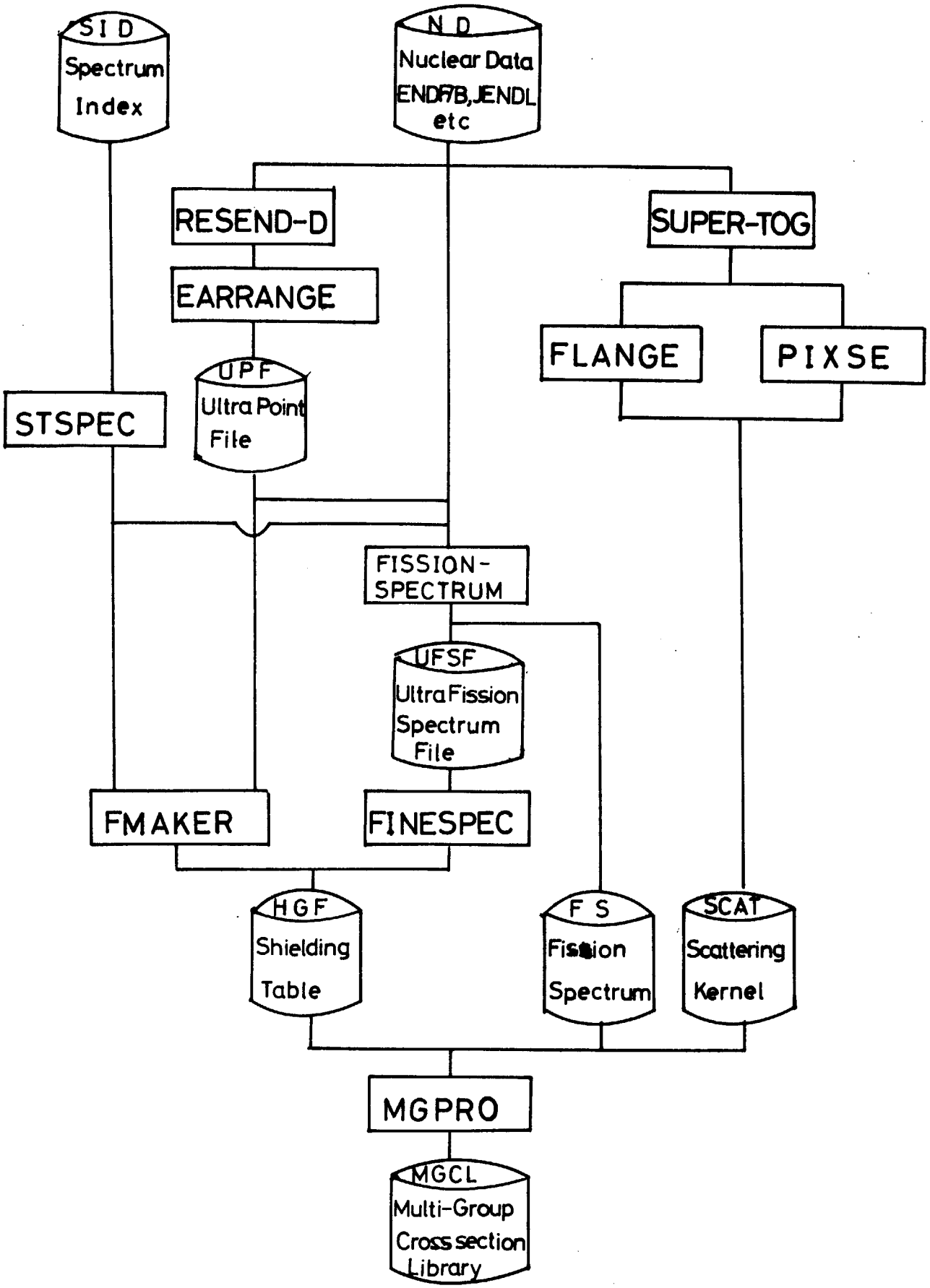

Fig. 2 Flow diagram for MGCL

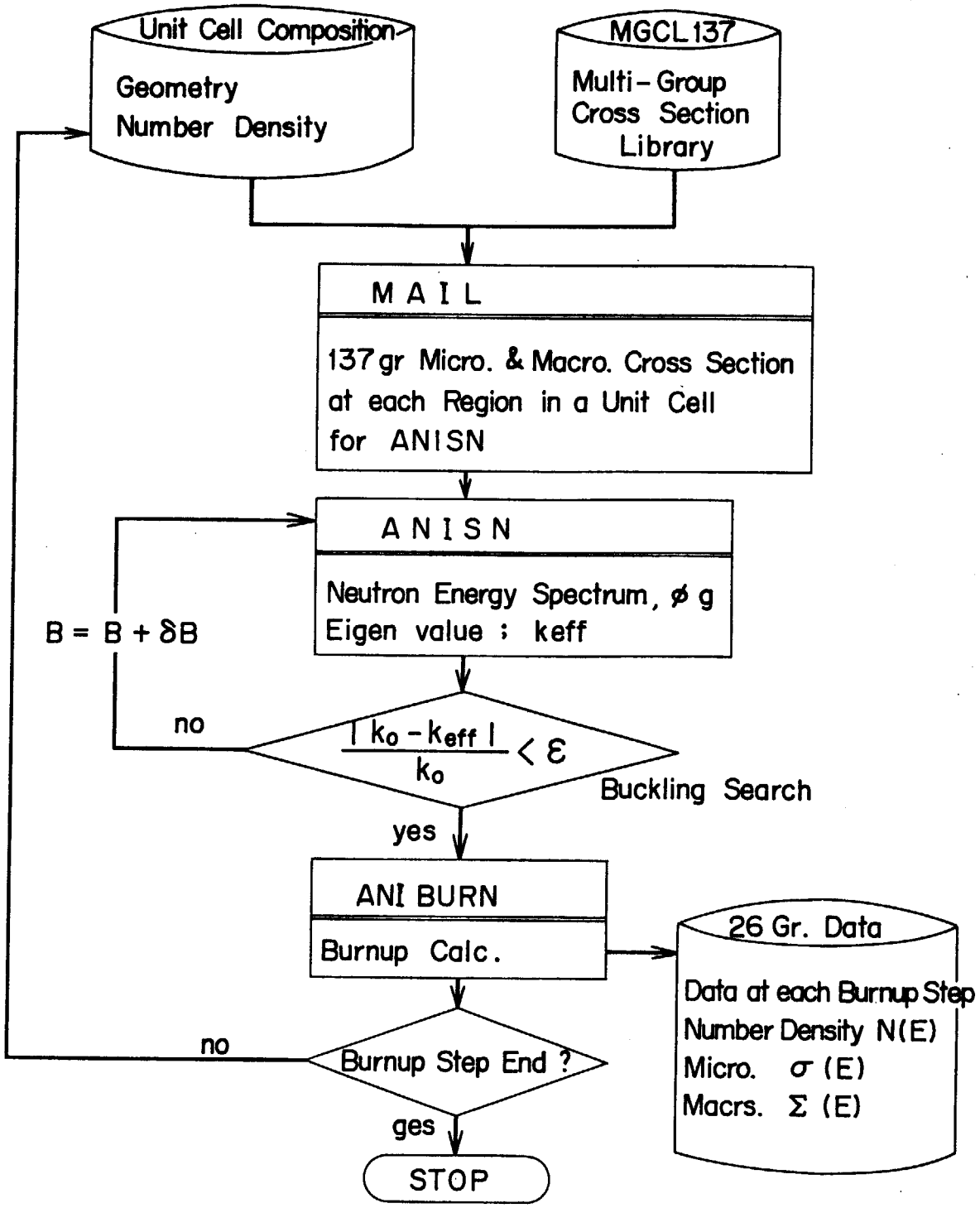

Fig. 3 Flow diagram for unit cell calculation

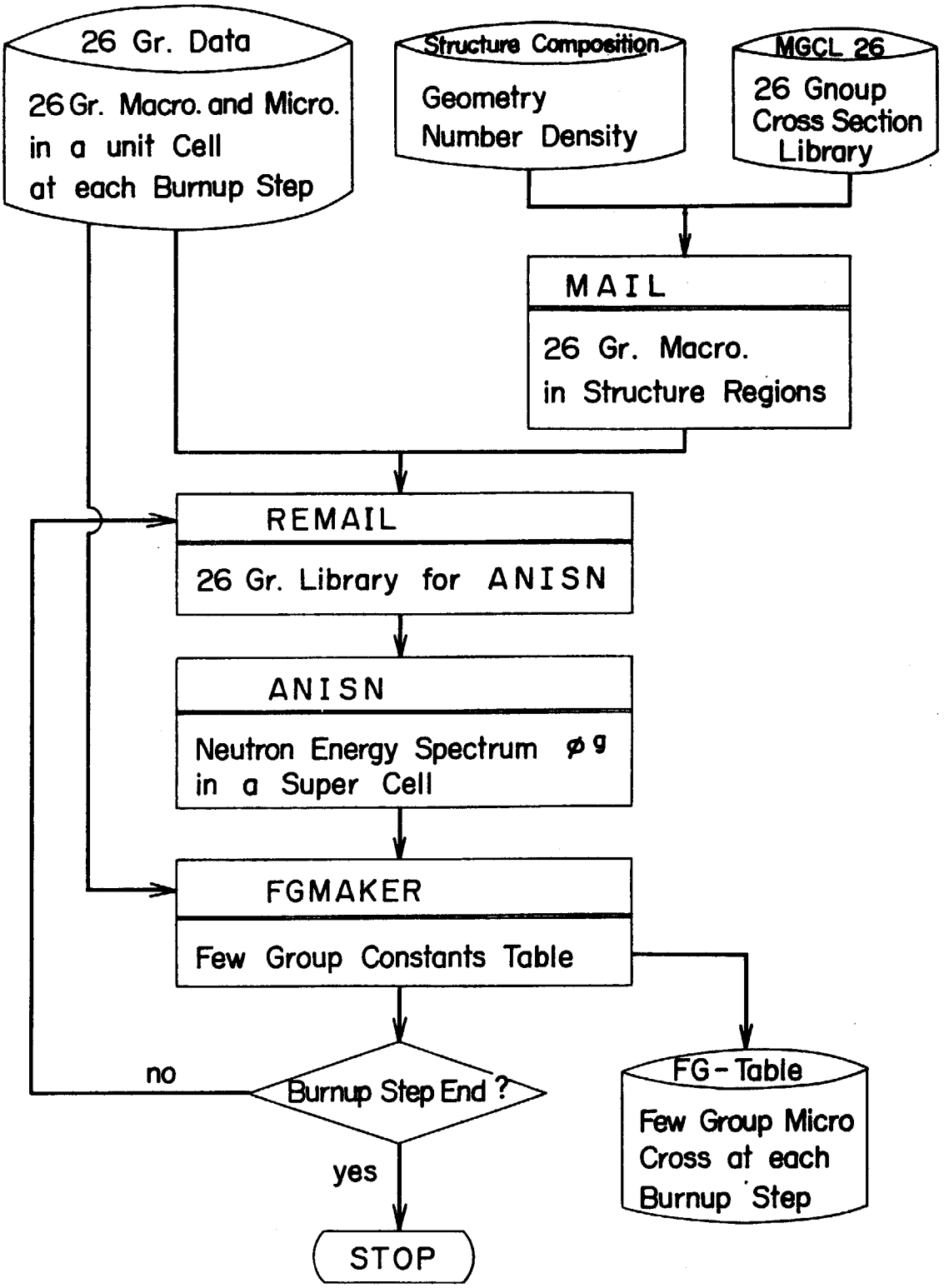

Fig. 4 Flow diagram for super cell calculation

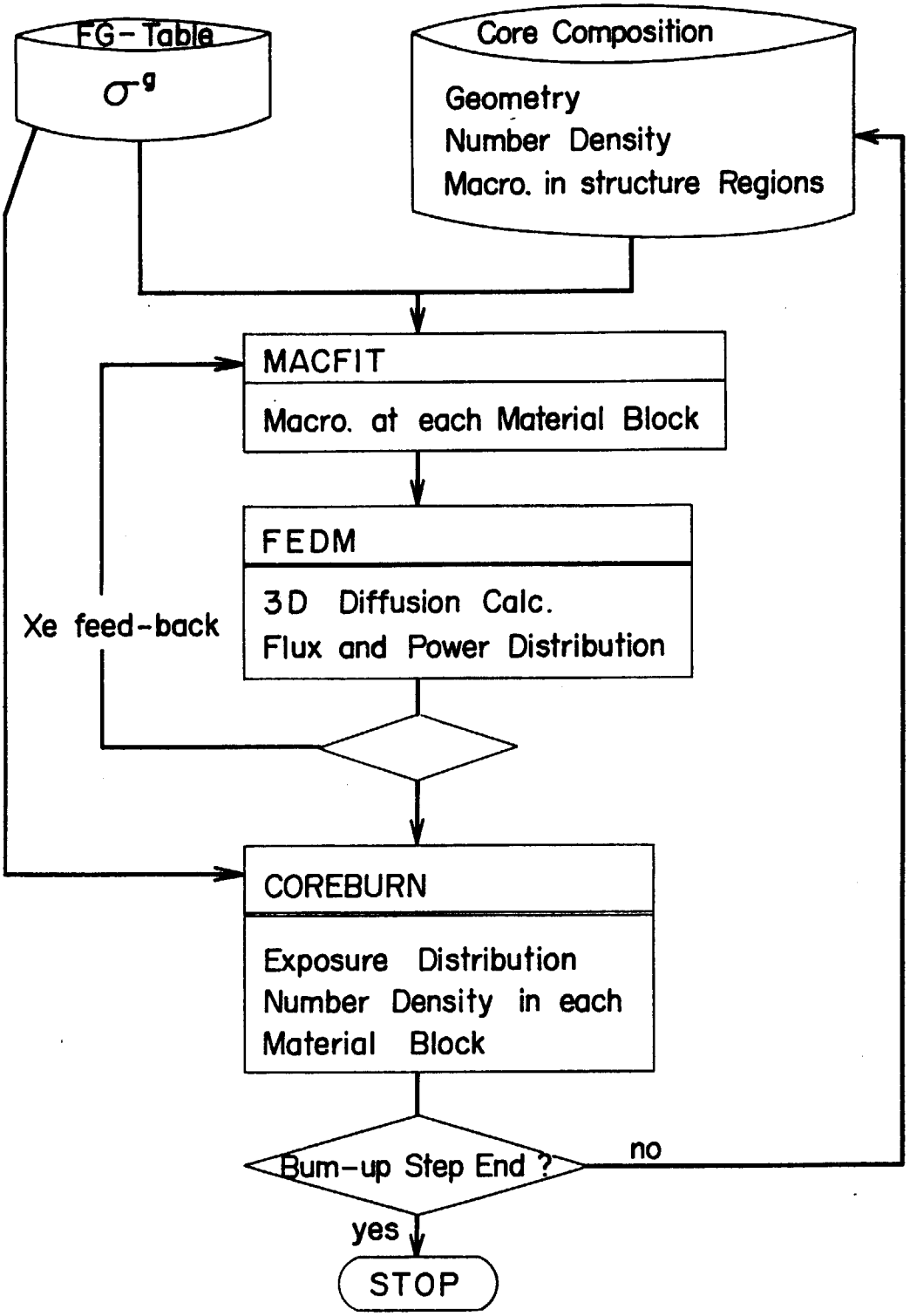

Fig. 5 Flow diagram for whole core calculation

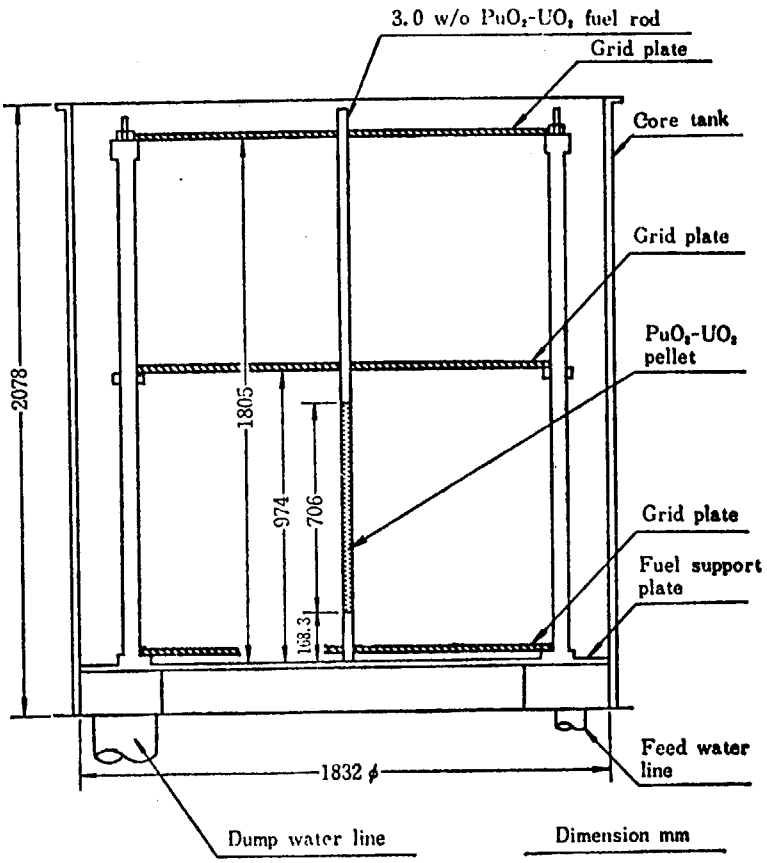

Fig. 6 Vertical cross-sectional view of core

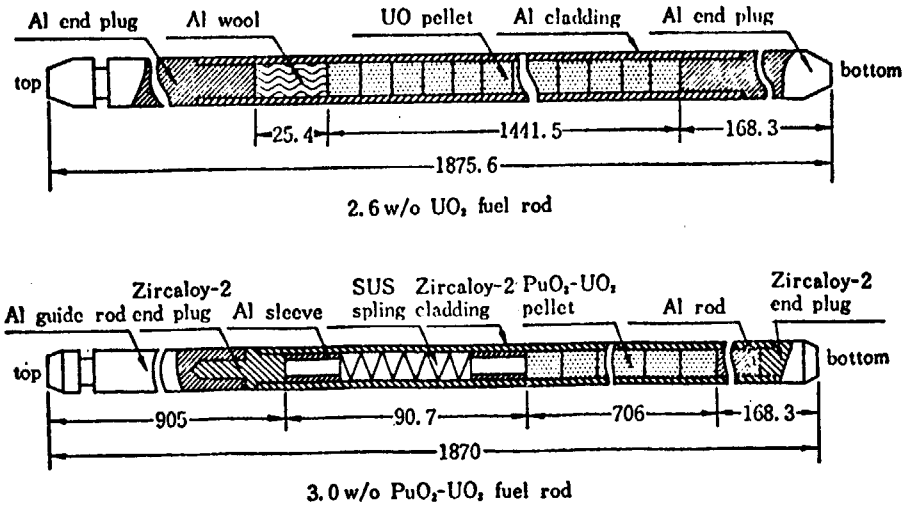

Fig. 7 2.6w/o UO_2 and 3.0w/o PuO_2-natural UO_2 fuel rods

Patterns of Lattice Configurations

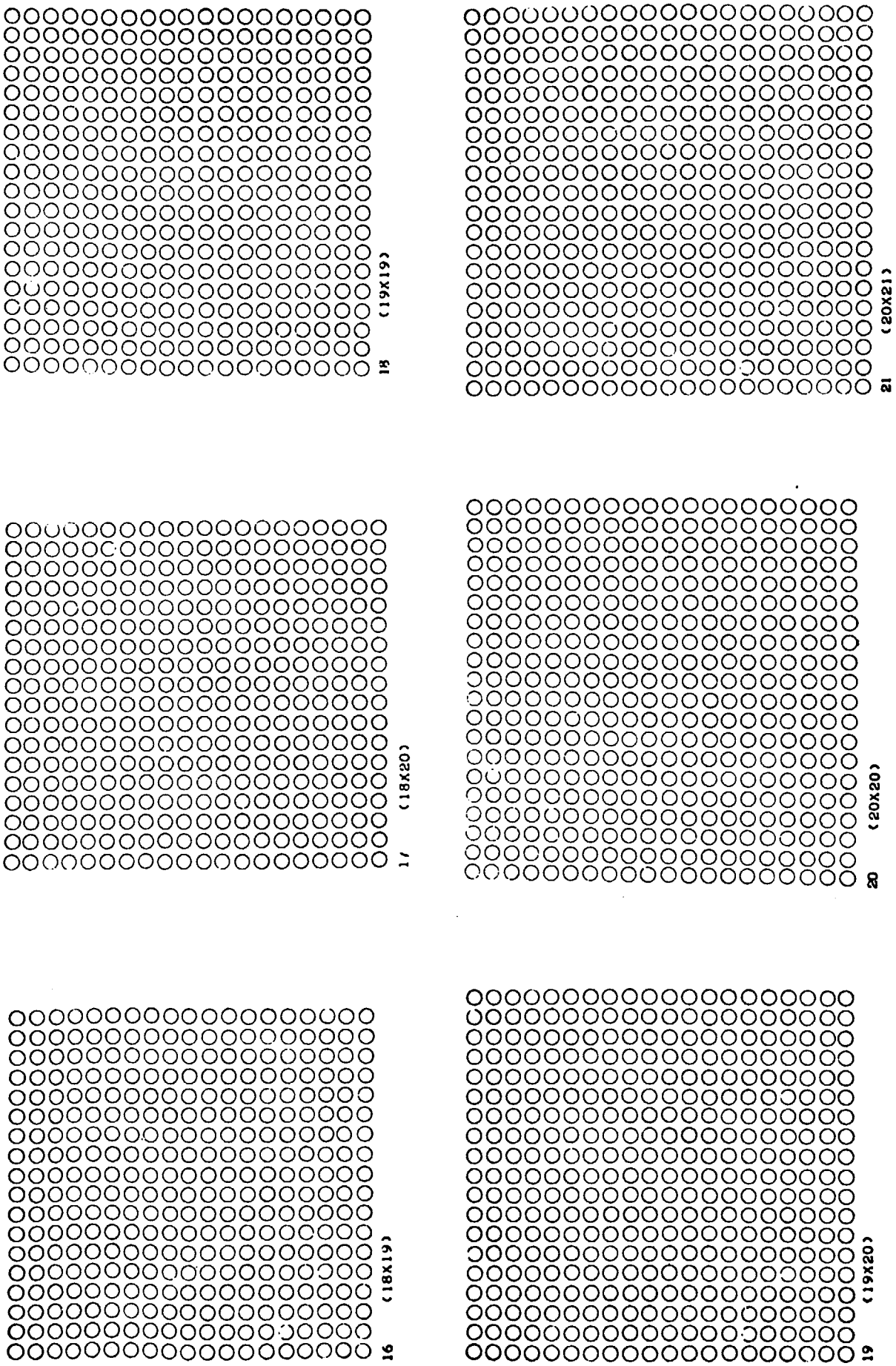

Fig. 8 Patterns of lattice configurations

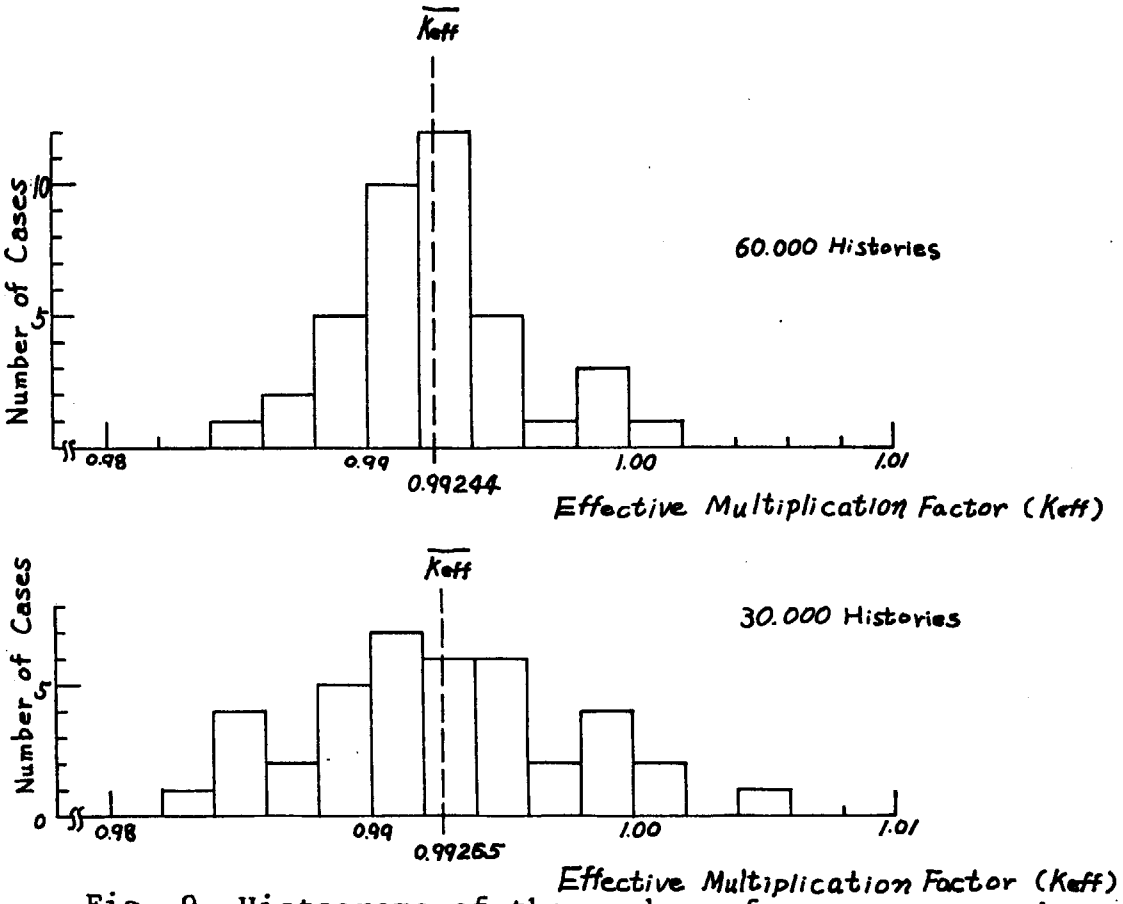

Fig. 9 Histograms of the number of cases computed with 60000 and 30000 histories in UO_2 system

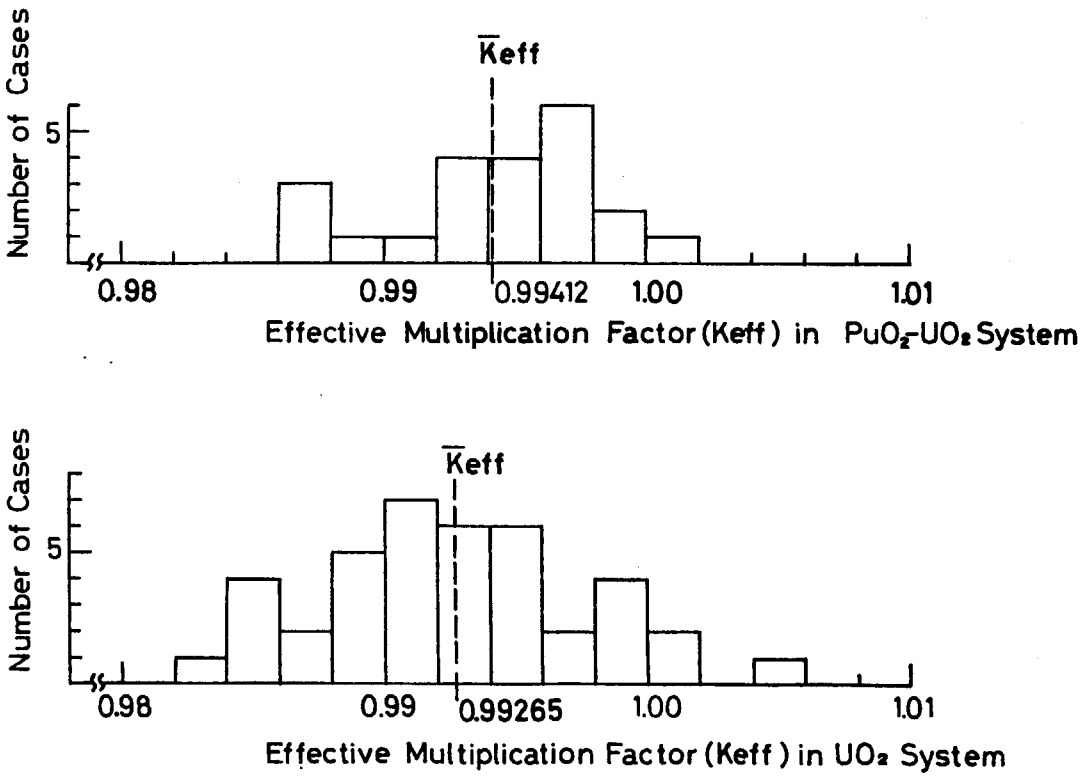

Fig. 10 Histograms of the number of cases in PuO_2-UO_2 systems

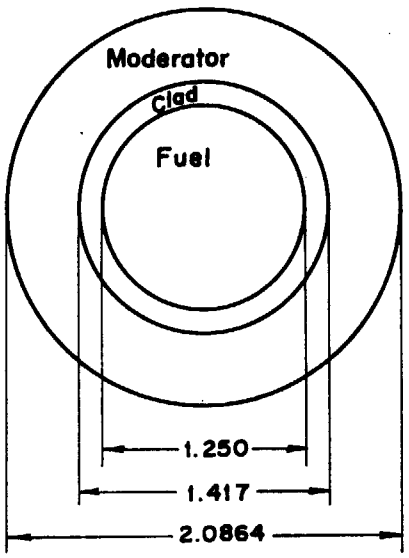

Fig. 11 1.50U unit cell of TCA

(all dimension in Cm)

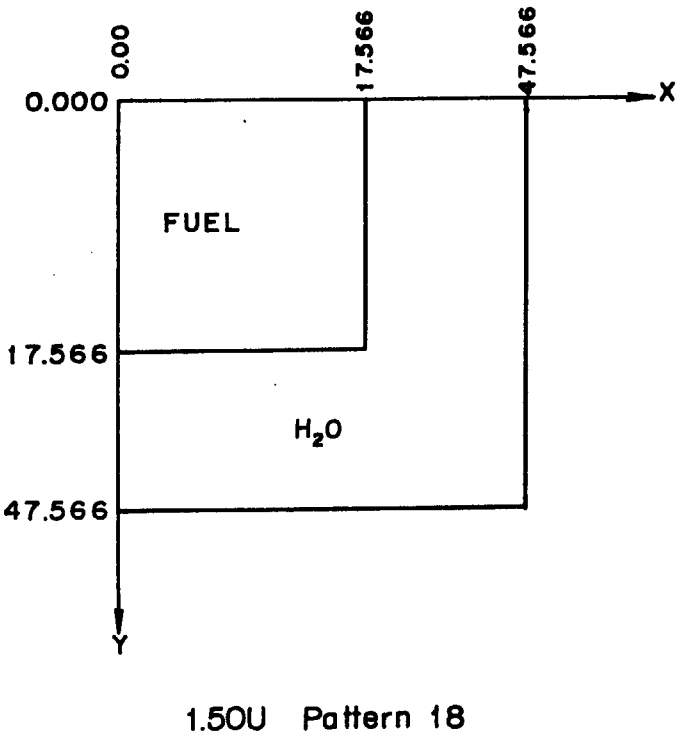

Fig. 12 X-Y model on TCA for two-dimensional calculation

(all dimension in Cm)

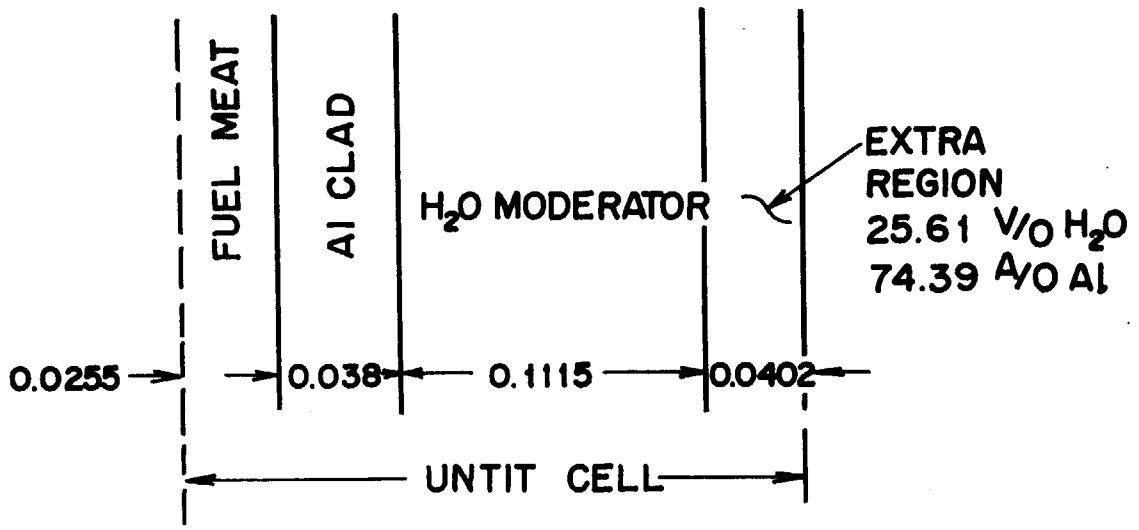

Standard Fuel Elment

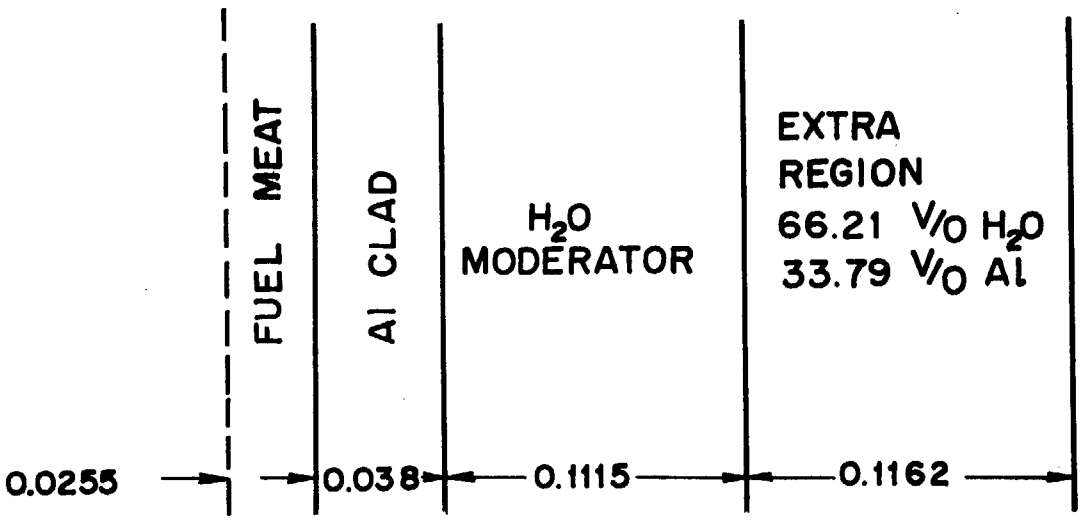

Control Fuel Element

Fig. 13 Slab geometry of unit cell in MTR type reactor
(all dimension in Cm)

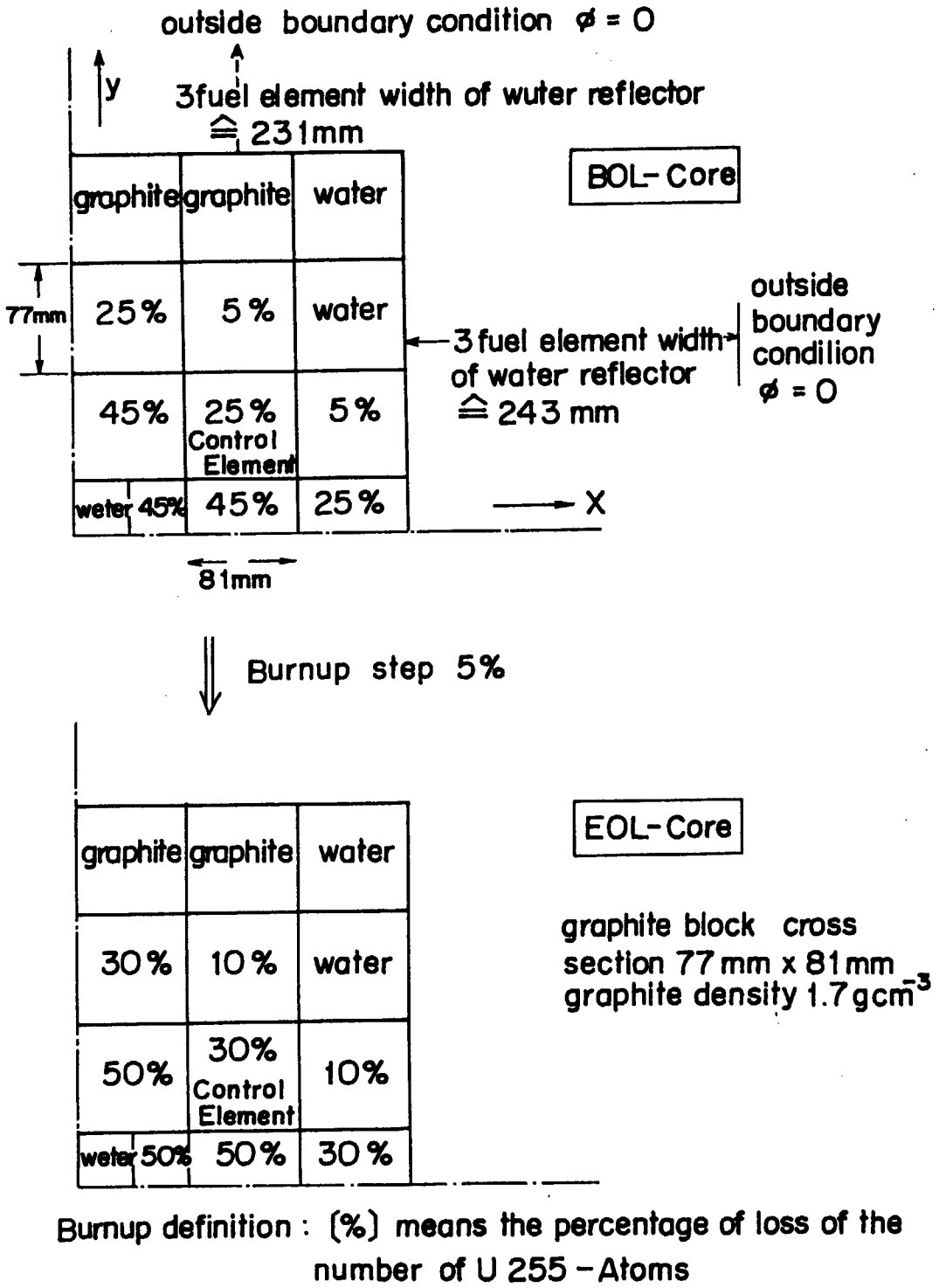

Fig. 14-1 Core composition for the methodical benchmark problem

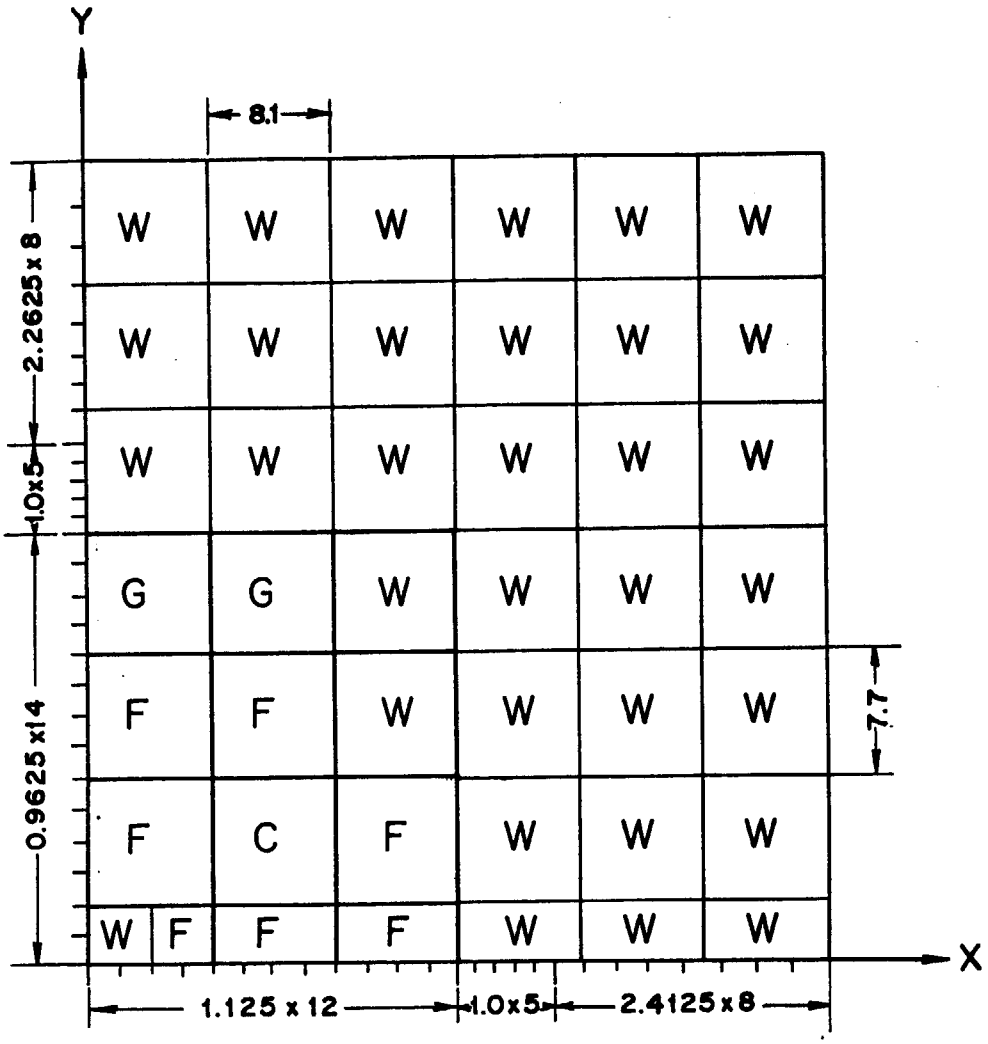

F : Standard Fuel Element
C : Control. Fuel Element
G : Graphite.
W : Water.

Fig. 14-2 X-Y model on MTR type reactor for two-dimensional calculation
(all dimension in Cm)

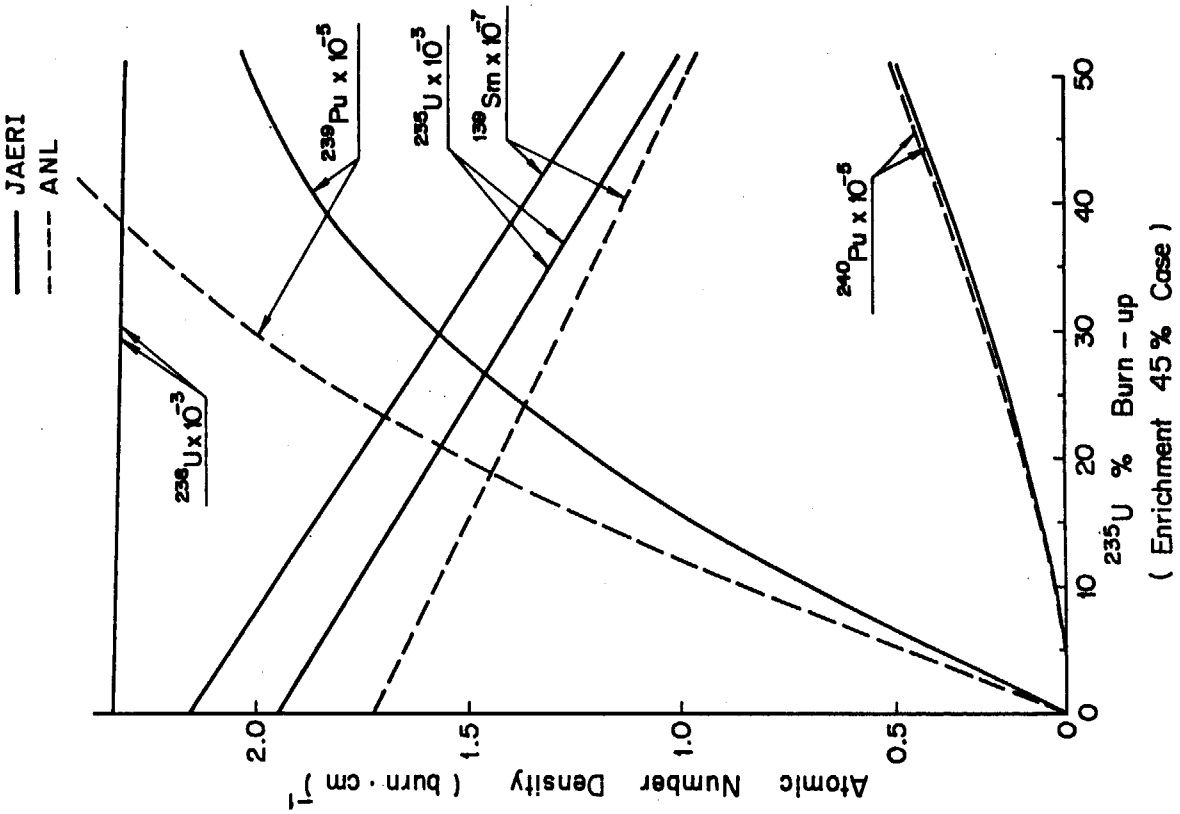

Fig. 15-2 Atomic number density vs. ^{235}U burnup

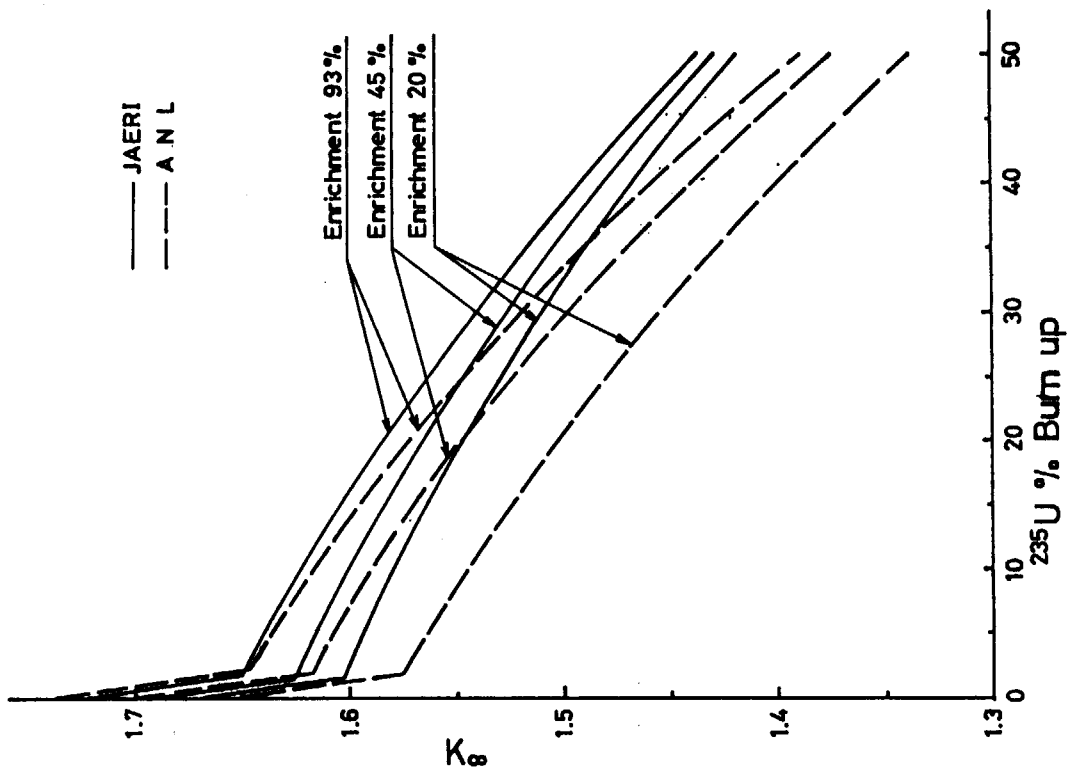

Fig.15-1 K_∞ vs. ^{235}U burnup as a parameter of enrichments

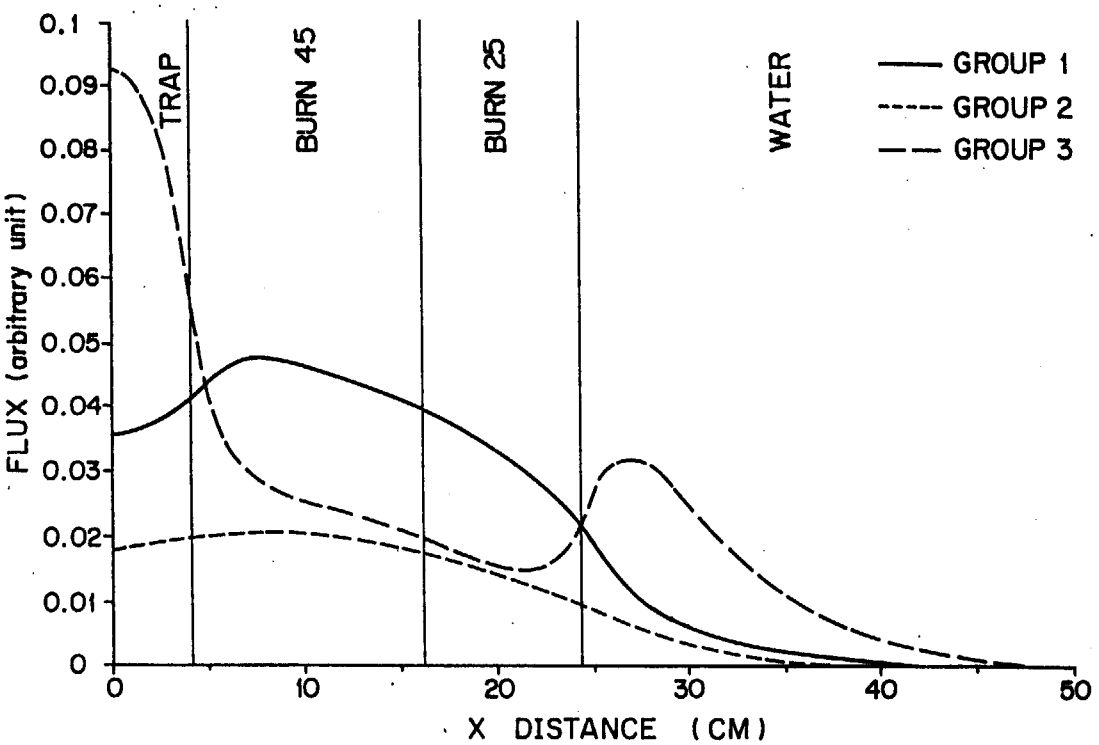

Fig. 16-1 Fluxes at midplane along X-axis
IAEA 10 MW Benchmark 93% U-235 BOL

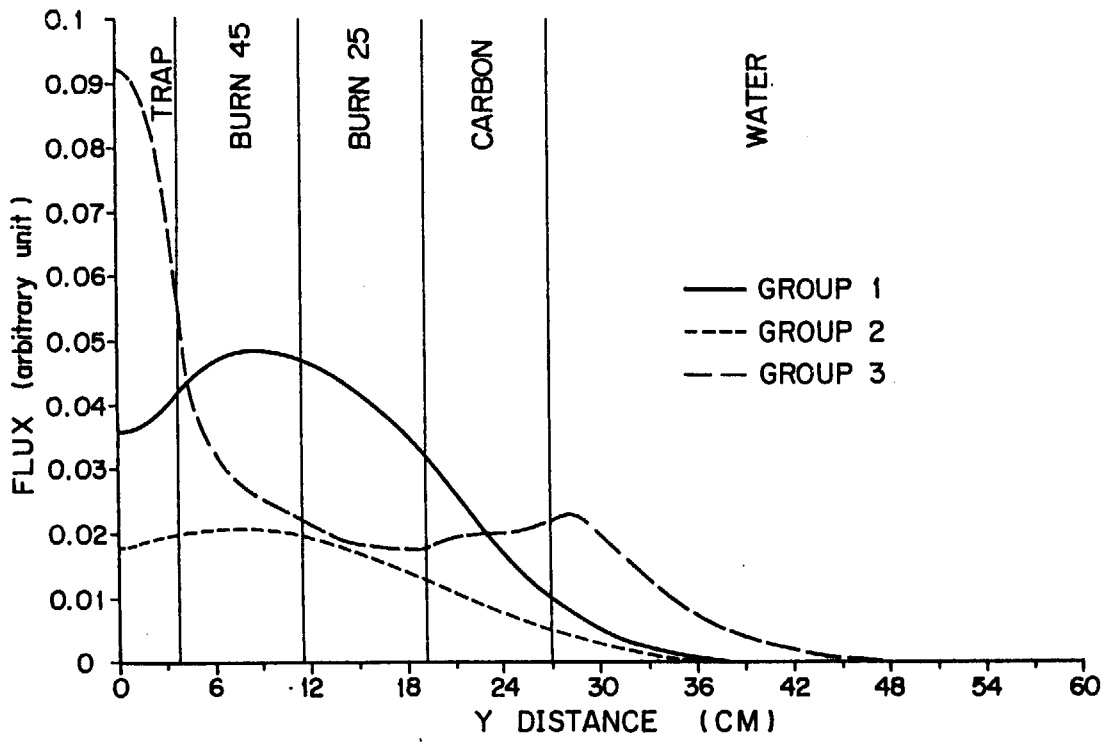

Fig. 16-2 Fluxes at midplane along Y-axis
IAEA 10 MW Benchmark 93% U-235 BOL

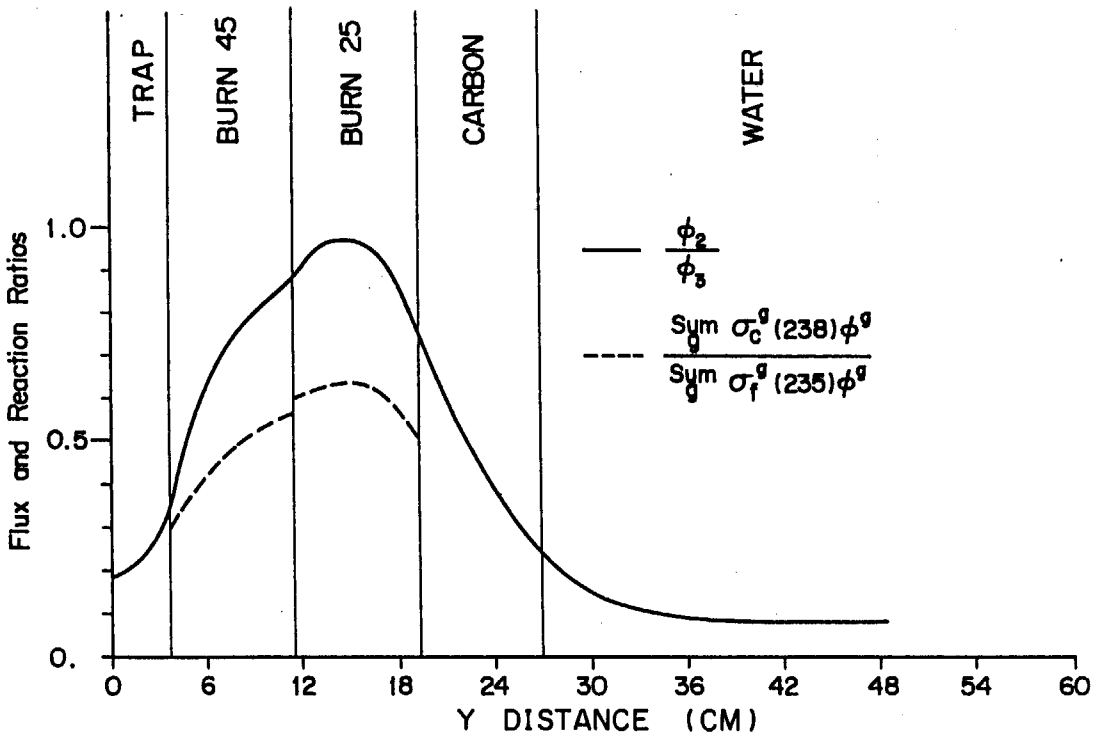

Fig. 16-3 ^{238}U capture to ^{235}U fission ratio and thermal to epi-thermal flux ratio IAEA 10 MW Benchmark 93 % U-235 BOL

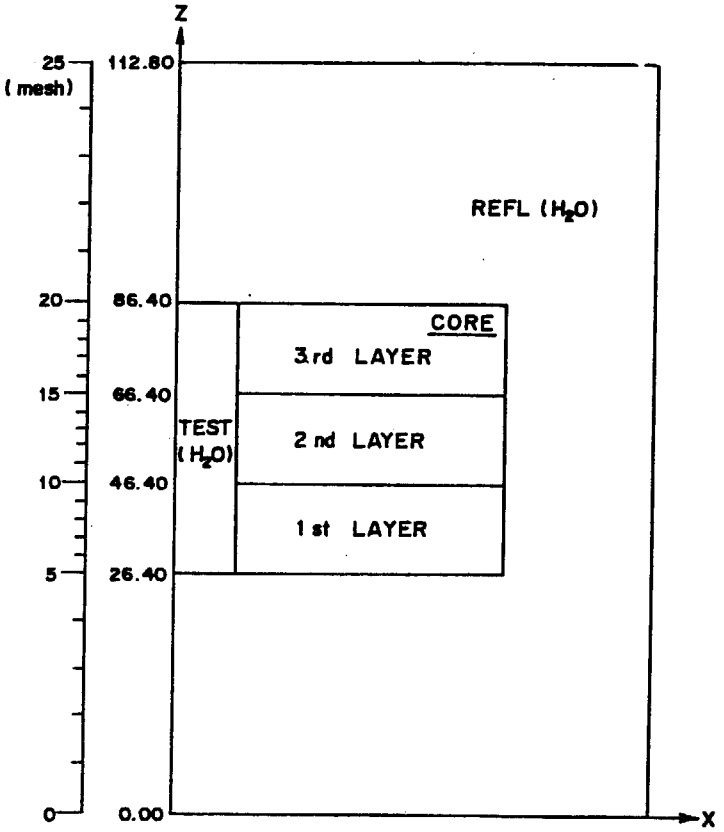

Fig. 17-1 X-Z mode on 2 MW reactor for three-dimentional calculation (all dimension in Cm)

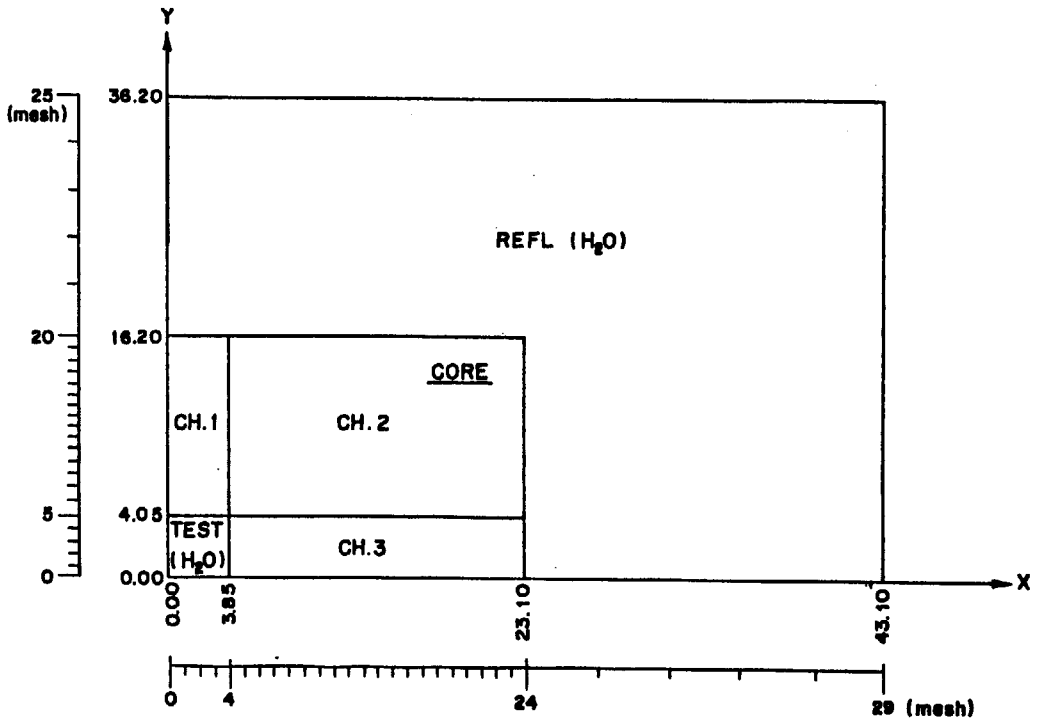

Fig. 17-2 X-Y model on 2 MW reactor for three dimentional calculation (all dimension in Cm)

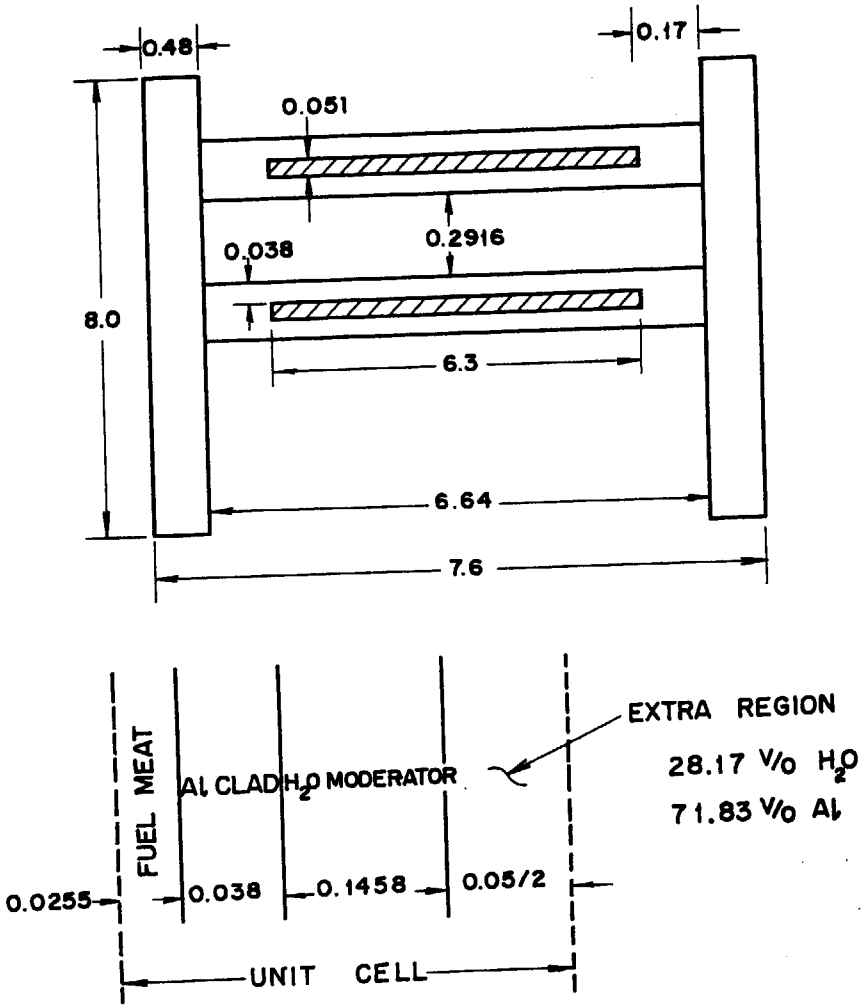

Fig. 18 2 MW reactor-fuel element and unit cell (all dimension in Cm)

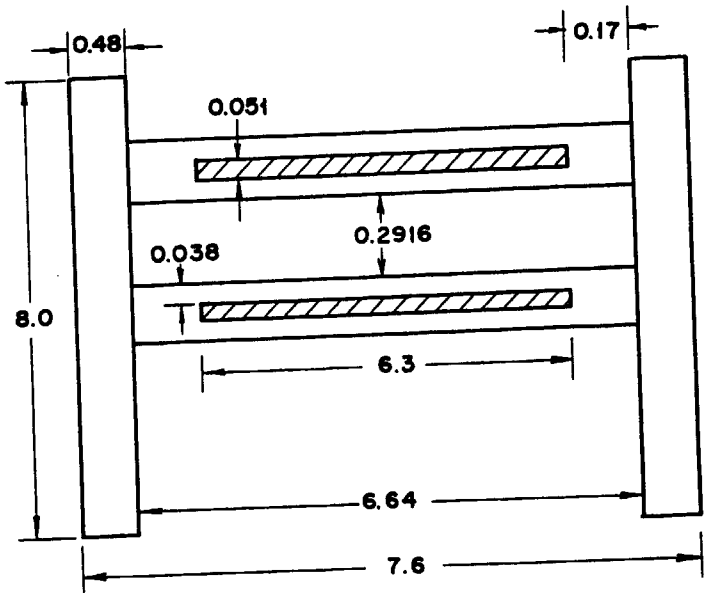

Fig. 19 2 MW reactor-standard (19 plates/element) and control (15 plates/element) fuel element (all dimension in Cm)

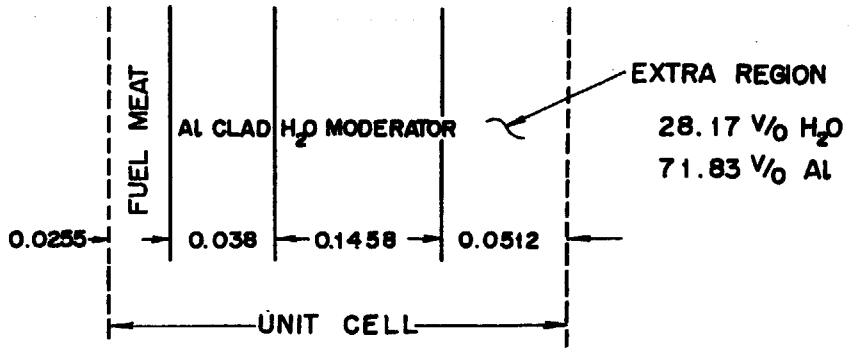

standard fuel element

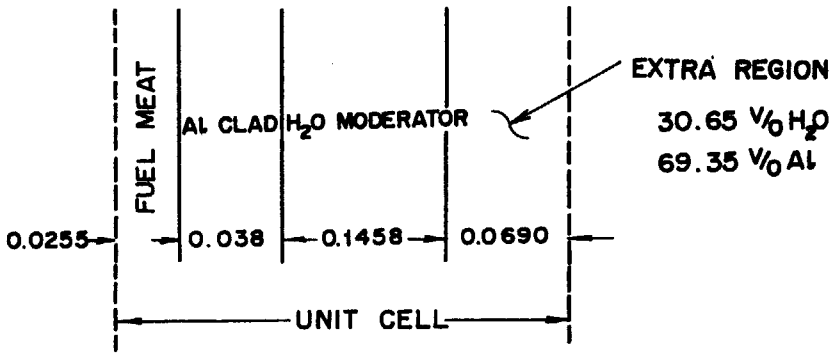

control fuel element

Fig. 20 Slab geometry of unit cell in 2 MW reactor (all dimension in Cm)

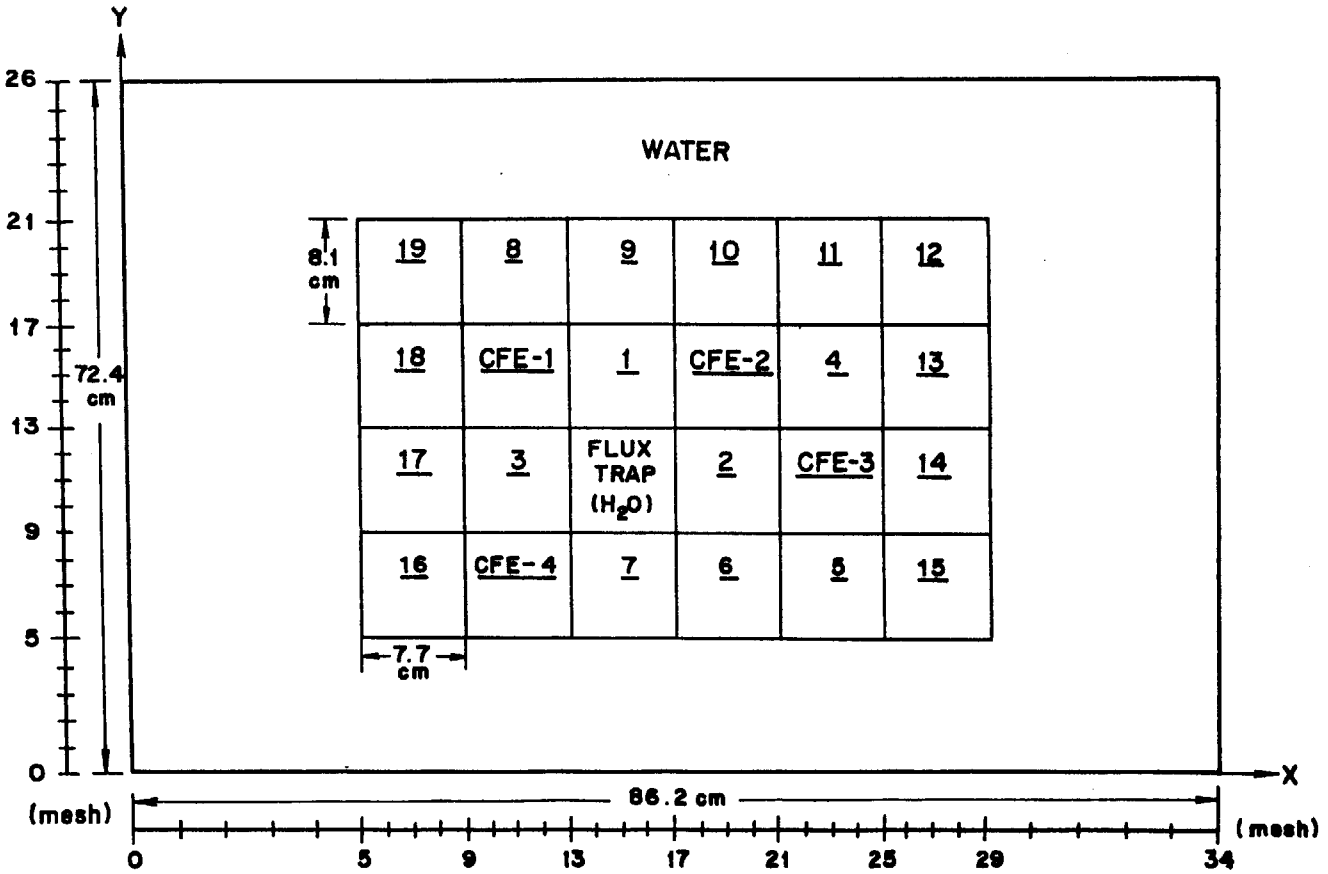

Fig. 21 X-Y model on 2 MW reactor for burnup studies

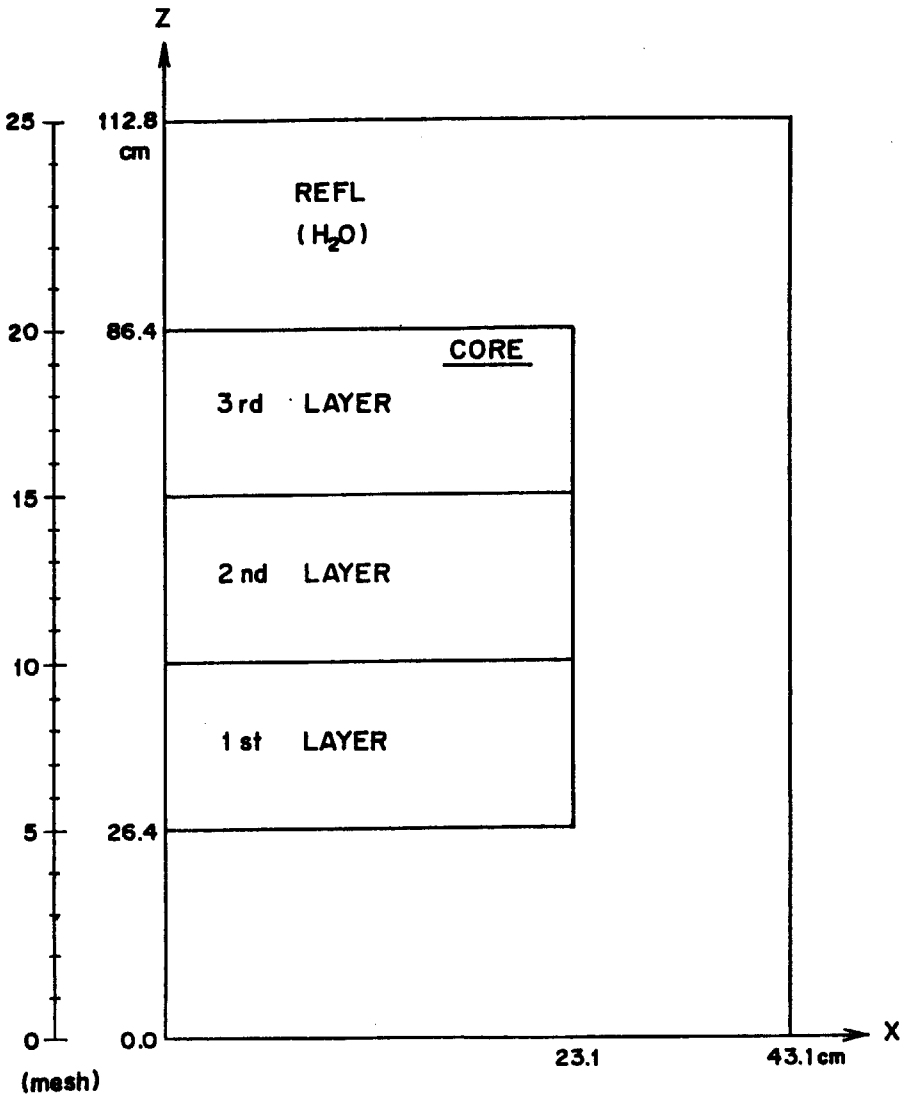

Fig. 22 X-Y model on 2 MW reactor for three-dimensional calculation

U Enrichment : 93 %
U Density : 0.528 g/cm³
Fresh Fuel Loading : 180 g

BOC K_{eff}
JAERI : 1.0029
ANL : 1.0059
EOC K_{eff}
JAERI : 0.9994
ANL : 1.0000

Channel NO.
235U Weight
Pu JAERI
(ANL)

BOC

19 159.9 g 0.064 g (0.06 g)	8 170.5 0.031 (0.03)	9 169.5 0.034 (0.03)	10 168.3 0.038 (0.04)	11 167.0 0.042 (0.04)	12 165.9 0.047 (0.05)
18 160.8 0.062 (0.06)	CFE-1 132.4 0.022 (0.03)	1 180.0 0.0 (0.0)	CFE-2 130.1 0.027 (0.04)	4 175.3 0.018 (0.02)	13 165.1 0.049 (0.05)
17 161.7 0.059 (0.06)	3 176.6 0.015 (0.01)	FLUX TRAP (H_2O)	2 178.3 0.011 (0.01)	CFE-3 131.7 0.024 (0.03)	14 164.1 0.052 (0.05)
16 162.3 0.058 (0.06)	CFE-4 134.5 0.017 (0.02)	7 171.7 0.027 (0.03)	6 172.9 0.024 (0.02)	5 173.9 0.017 (0.02)	15 163.1 0.055 (0.05)

EOC

19 159.2 0.066 (0.07)	8 169.5 0.034 (0.03)	9 168.3 0.038 (0.04)	10 167.0 0.042 (0.04)	11 165.9 0.047 (0.05)	12 165.1 0.049 (0.05)
18 159.9 0.064 (0.06)	CFE-1 131.3 0.025 (0.03)	1 178.3 0.011 (0.01)	CFE-2 128.8 0.028 (0.04)	4 173.9 0.017 (0.02)	13 164.1 0.052 (0.05)
17 160.8 0.062 (0.06)	3 175.3 0.018 (0.02)	FLUX TRAP (H_2O)	2 176.6 0.015 (0.01)	CFE-3 130.6 0.026 (0.04)	14 163.1 0.055 (0.05)
16 161.7 0.059 (0.06)	CFE-4 133.9 0.019 (0.02)	7 170.5 0.031 (0.03)	6 171.7 0.027 (0.03)	5 172.9 0.024 (0.02)	15 162.3 0.058 (0.06)

Fig. 23 2 MW reactor-HEU (93%) fuel

U Enrichment : 20 %
U Density : 2.91 g/cm³
Fresh Fuel Loading : 213 g

BOC Keff
JAERI : 1.0069
ANL : 1.0050
EOC Keff
JAERI : 1.0032
ANL : 0.9999

CHANNEL NO
235U Weight
Pu JAERI
(ANL)

19 193.2 g 1.20 g (1.36 g)	8 203.7 0.61 (0.67)	9 202.7 0.68 (0.74)	10 201.5 0.76 (0.82)	11 200.2 0.83 (0.91)	12 199.2 0.90 (0.98)
18 194.1 1.18 (1.30)	CFE-1 158.6 0.47 (0.68)	1 213.1 0.0 (0.0)	CFE-2 156.4 0.57 (0.83)	4 208.4 0.30 (0.33)	13 198.4 0.95 (1.03)
17 195.0 1.12 (1.25)	3 209.8 0.21 (0.24)	FLUX TRAP (H_2O)	2 211.4 0.12 (0.12)	CFE-3 158.1 0.47 (0.73)	14 197.4 1.00 (1.10)
16 195.6 1.10 (1.21)	CFE-4 160.7 0.36 (0.47)	7 204.9 0.53 (0.59)	6 206.1 0.45 (0.51)	5 207.1 0.38 (0.44)	15 196.4 1.05 (1.16)

19 192.5 g 1.22 (1.40)	8 202.7 0.68 (0.74)	9 201.5 0.76 (0.82)	10 200.2 0.83 (0.91)	11 199.2 0.90 (0.98)	12 198.4 0.95 (1.03)
18 193.2 1.20 (1.36)	CFE-1 157.5 0.51 (0.75)	1 211.4 0.12 (0.12)	CFE-2 155.1 0.59 (0.91)	4 207.1 0.38 (0.44)	13 197.4 1.00 (1.10)
17 194.1 1.18 (1.30)	3 208.4 0.30 (0.33)	FLUX TRAP (H_2O)	2 209.8 0.21 (0.24)	CFE-3 156.9 0.54 (0.81)	14 196.4 1.05 (1.16)
16 195.0 1.12 (1.25)	CFE-4 159.9 0.40 (0.53)	7 203.7 0.61 (0.67)	6 204.9 0.53 (0.59)	5 206.1 0.45 (0.51)	15 195.6 1.10 (1.21)

Fig. 24 2MW reactor-LEU (20%) fuel

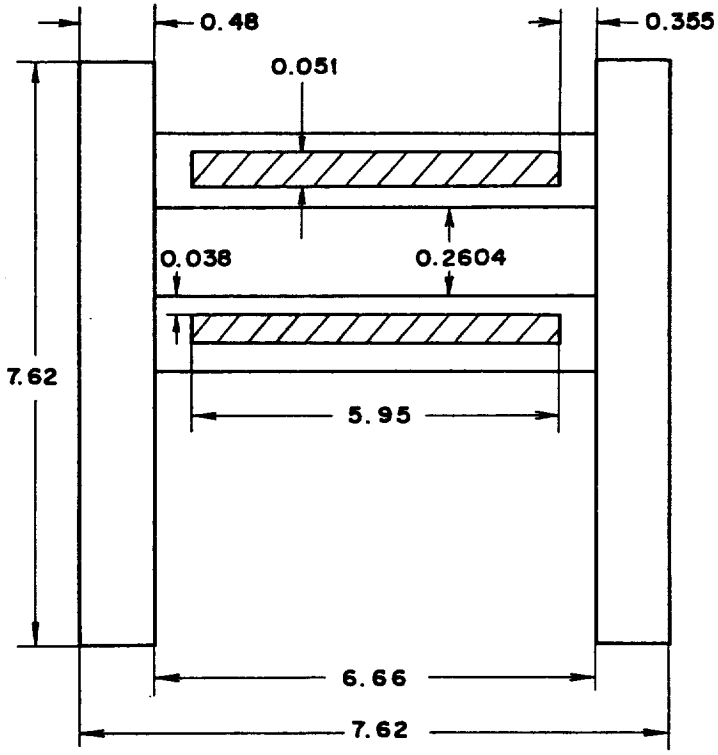

(all dimension in Cm)

Including a 0.5 mm water channel surrounding each element

Volume Fractions

Fuel	Meat	0.0967
Al		0.2844
H_2O		0.6189

Fig. 25-1 JMTR-standard fuel element

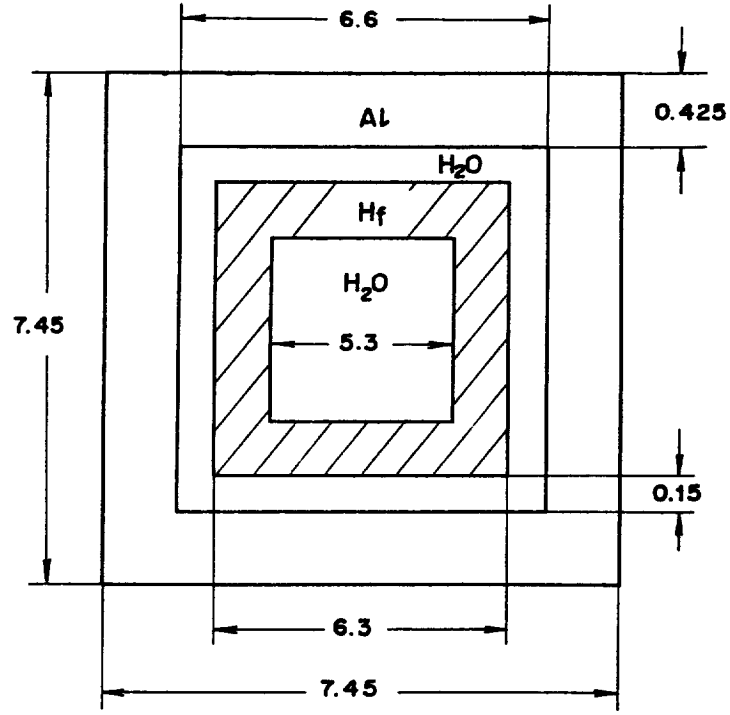

(all dimension in Cm)

Including a 1.35 mm water channel surrounding element

Volume Fraction

H_f	0.1946
Al	0.2004
H_2O	0.6050

Fig. 25-2 JMTR-control element

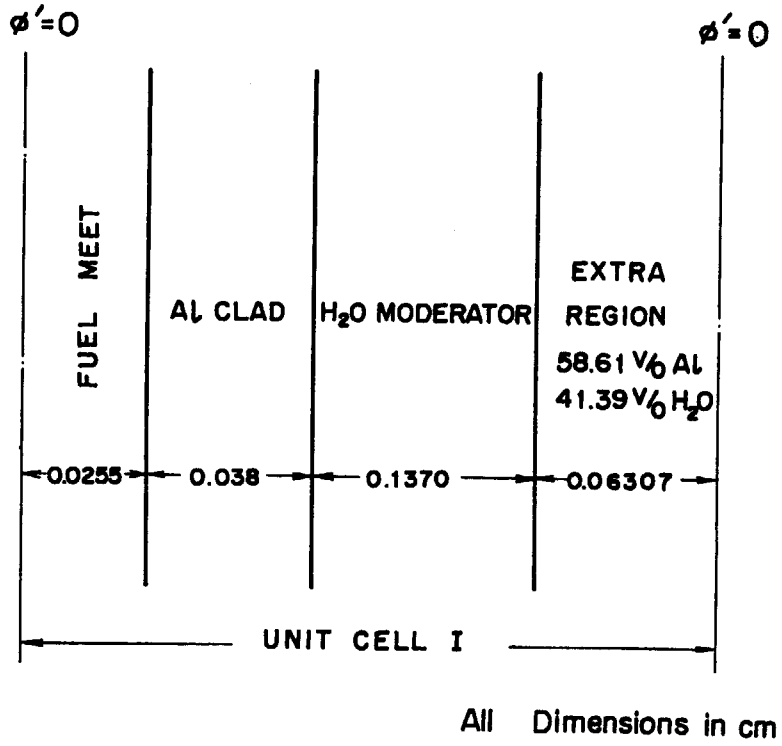

Fig. 26-1 Slab geometry of unit cell I (fuel element)

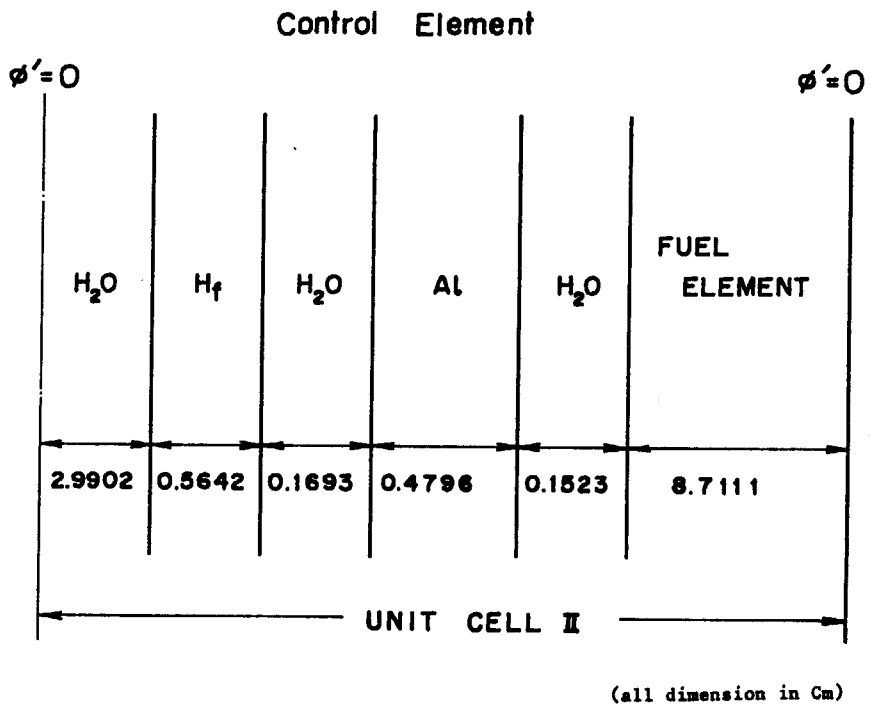

Fig. 26-2 Slab geometry of unit cell II (control element)

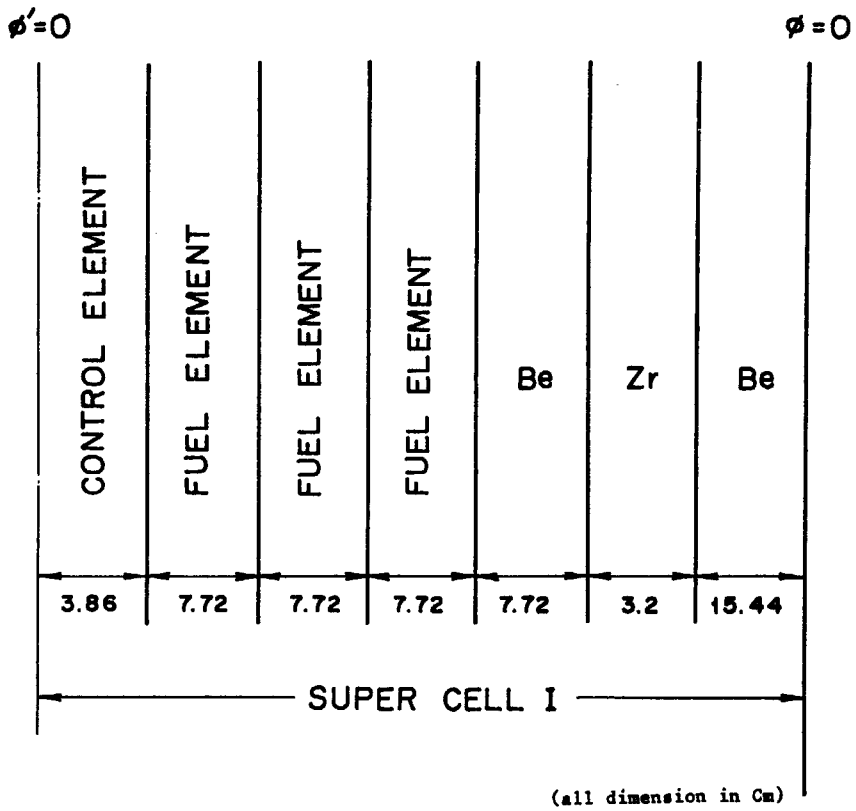

Fig. 27-1 Slab geometry of super cell I

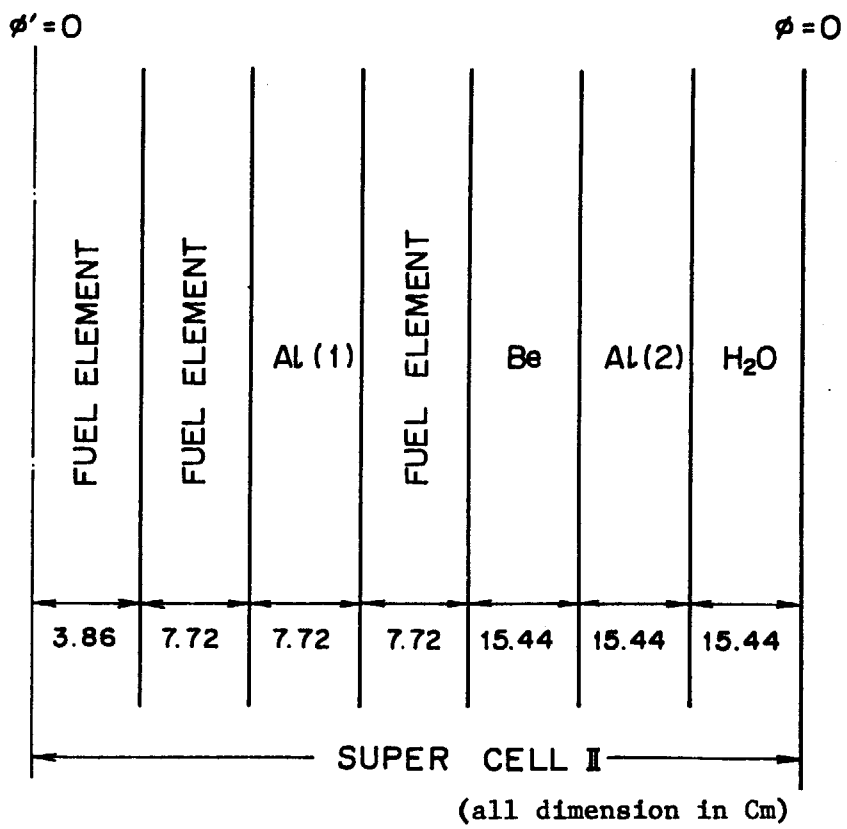

Fig. 27-2 Slab geometry of super cell II

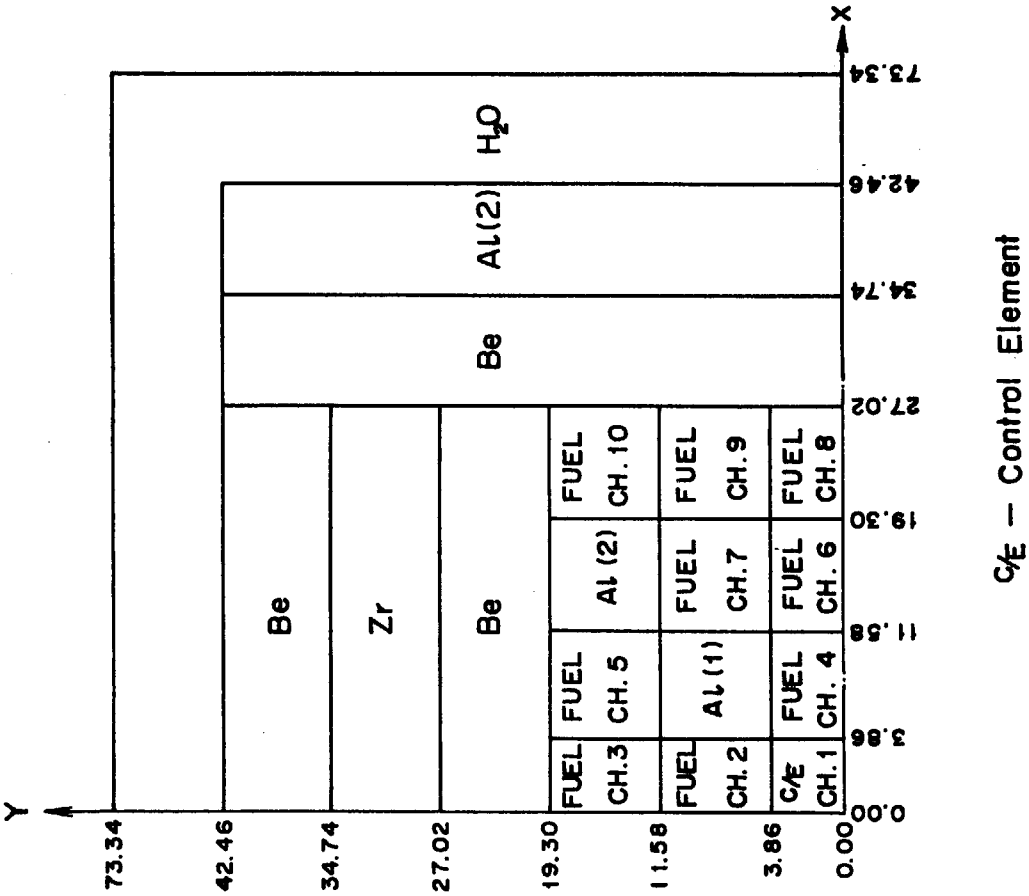

Fig. 29 X-Y model on JMTR

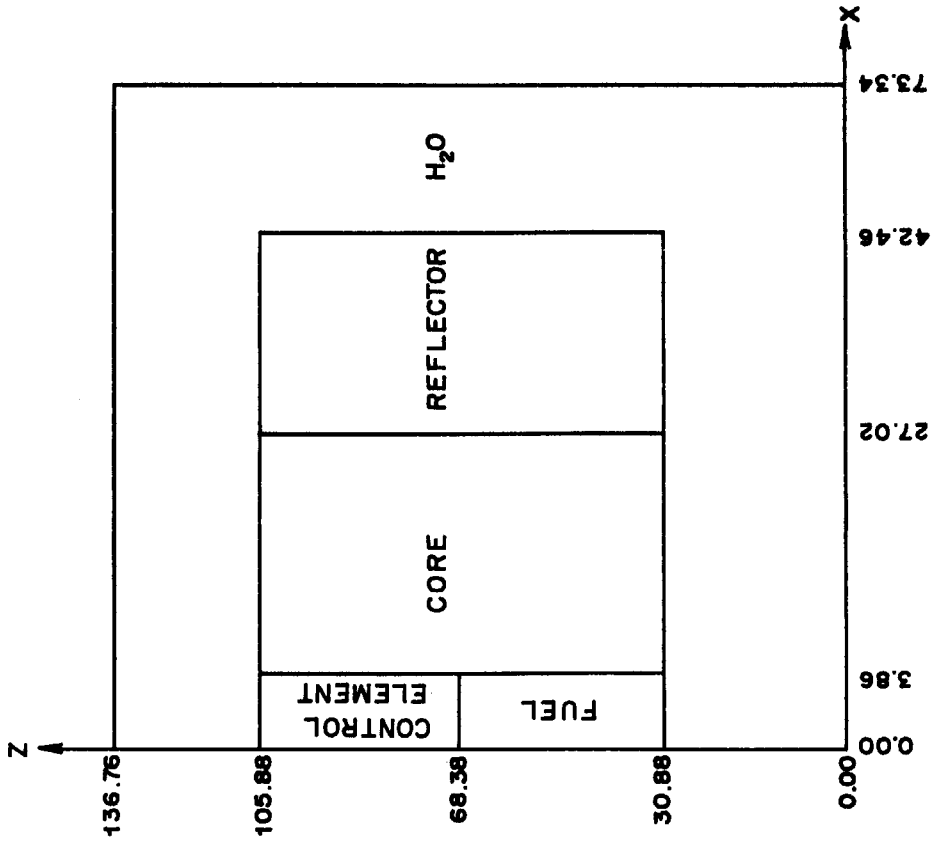

Fig. 28 X-Z model on JMTR

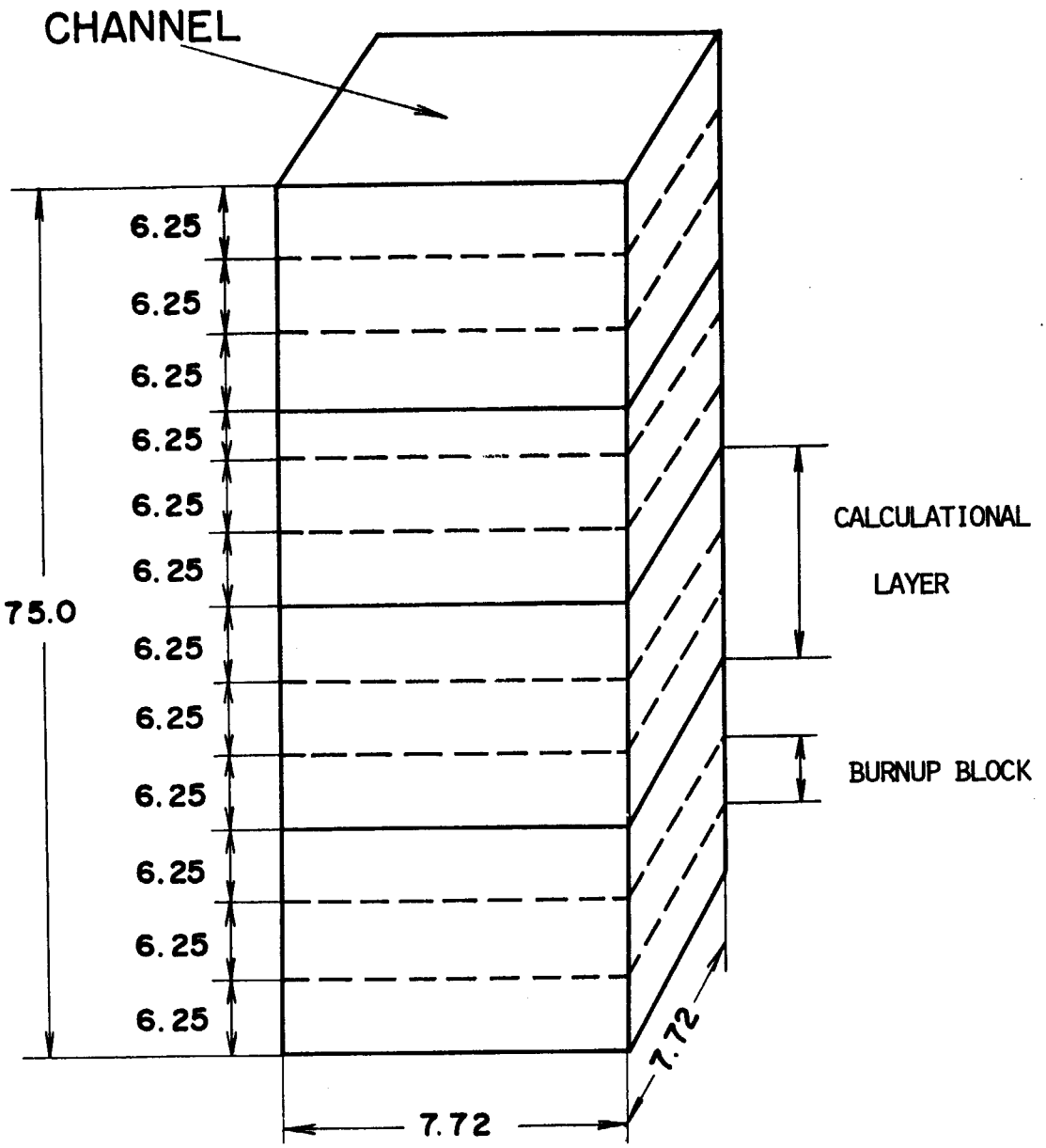

(all dimension in Cm)

Fig. 30 Mesh specification of a channel for three-dimensional burn-up calculation

Appendix

Veriation of isotope distribution in the JMTR core versus burn-up

*** JMTR 93 ENRICHMENT 50 MW 3 STEP BURN-UP CALCULATION ***

INITIAL NUCLIDE NUMBER DENSITIES

CHANNEL 1

BURN-UP BLOCK

NUCLIDE	1 11	2 12	3	4	5
U-235	1,8332E-04 1,0000E-30	1,8332E-04 1,0000E-30	1,8332E-04	1,8332E-04	1,8332E-04
U-236	1,0000E-30 1,0000E-30	1,0000E-30 1,0000E-30	1,0000E-30	1,0000E-30	1,0000E-30
U-238	2,2124E-04 1,0000E-30	2,2124E-04 1,0000E-30	2,2124E-04	2,2124E-04	2,2124E-04
PU-239	1,0000E-30 1,0000E-30	1,0000E-30 1,0000E-30	1,0000E-30	1,0000E-30	1,0000E-30
PU-240	1,0000E-30 1,0000E-30	1,0000E-30 1,0000E-30	1,0000E-30	1,0000E-30	1,0000E-30
PU-241	1,0000E-30 1,0000E-30	1,0000E-30 1,0000E-30	1,0000E-30	1,0000E-30	1,0000E-30
PU-242	1,0000E-30 1,0000E-30	1,0000E-30 1,0000E-30	1,0000E-30	1,0000E-30	1,0000E-30
F.P.	1,0000E-30 1,0000E-30	1,0000E-30 1,0000E-30	1,0000E-30	1,0000E-30	1,0000E-30
XE-135	1,0000E-30 1,0000E-30	1,0000E-30 1,0000E-30	1,0000E-30	1,0000E-30	1,0000E-30
SM-149	1,0000E-30 1,0000E-30	1,0000E-30 1,0000E-30	1,0000E-30	1,0000E-30	1,0000E-30
H	4,0807E-02 1,0000E-30	4,0807E-02 1,0000E-30	4,0807E-02	4,0807E-02	4,0807E-02
O	2,0404E-02 1,0000E-30	2,0404E-02 1,0000E-30	2,0404E-02	2,0404E-02	2,0404E-02
AL	2,2475E-02 4,9230E-01	2,2475E-02 4,9230E-01	2,2475E-02	2,2475E-02	2,2475E-02

NUCLIDE	6	7	8	9	10
U-235	1,8332E-04	1,0000E-30	1,0000E-30	1,0000E-30	1,0000E-30
U-236	1,0000E-30	1,0000E-30	1,0000E-30	1,0000E-30	1,0000E-30
U-238	2,2124E-04	1,0000E-30	1,0000E-30	1,0000E-30	1,0000E-30
PU-239	1,0000E-30	1,0000E-30	1,0000E-30	1,0000E-30	1,0000E-30
PU-240	1,0000E-30	1,0000E-30	1,0000E-30	1,0000E-30	1,0000E-30
PU-241	1,0000E-30	1,0000E-30	1,0000E-30	1,0000E-30	1,0000E-30
PU-242	1,0000E-30	1,0000E-30	1,0000E-30	1,0000E-30	1,0000E-30
F.P.	1,0000E-30	1,0000E-30	1,0000E-30	1,0000E-30	1,0000E-30
XE-135	1,0000E-30	1,0000E-30	1,0000E-30	1,0000E-30	1,0000E-30
SM-149	1,0000E-30	1,0000E-30	1,0000E-30	1,0000E-30	1,0000E-30
H	4,0807E-02	1,0000E-30	1,0000E-30	1,0000E-30	1,0000E-30
O	2,0404E-02	1,0000E-30	1,0000E-30	1,0000E-30	1,0000E-30
AL	2,2475E-02	4,9230E-01	4,9230E-01	4,9230E-01	4,9230E-01

CHANNEL 7

BURN-UP BLOCK

NUCLIDE	1 11	2 12	3	4	5
U-235	1,8332E-04 1,8332E-04	1,8332E-04 1,8332E-04	1,8332E-04	1,8332E-04	1,8332E-04
U-236	1,0000E-30 1,0000E-30	1,0000E-30 1,0000E-30	1,0000E-30	1,0000E-30	1,0000E-30
U-238	2,2124E-04 2,2124E-04	2,2124E-04 2,2124E-04	2,2124E-04	2,2124E-04	2,2124E-04
PU-239	1,0000E-30 1,0000E-30	1,0000E-30 1,0000E-30	1,0000E-30	1,0000E-30	1,0000E-30
PU-240	1,0000E-30 1,0000E-30	1,0000E-30 1,0000E-30	1,0000E-30	1,0000E-30	1,0000E-30
PU-241	1,0000E-30 1,0000E-30	1,0000E-30 1,0000E-30	1,0000E-30	1,0000E-30	1,0000E-30
PU-242	1,0000E-30 1,0000E-30	1,0000E-30 1,0000E-30	1,0000E-30	1,0000E-30	1,0000E-30
F.P.	1,0000E-30 1,0000E-30	1,0000E-30 1,0000E-30	1,0000E-30	1,0000E-30	1,0000E-30
XE-135	1,0000E-30 1,0000E-30	1,0000E-30 1,0000E-30	1,0000E-30	1,0000E-30	1,0000E-30
SM-149	1,0000E-30 1,0000E-30	1,0000E-30 1,0000E-30	1,0000E-30	1,0000E-30	1,0000E-30
H	4,0807E-02 4,0807E-02	4,0807E-02 4,0807E-02	4,0807E-02	4,0807E-02	4,0807E-02
O	2,0404E-02 2,0404E-02	2,0404E-02 2,0404E-02	2,0404E-02	2,0404E-02	2,0404E-02
AL	2,2475E-02 2,2475E-02	2,2475E-02 2,2475E-02	2,2475E-02	2,2475E-02	2,2475E-02

NUCLIDE	6	7	8	9	10
U-235	1,8332E-04	1,8332E-04	1,8332E-04	1,8332E-04	1,8332E-04
U-236	1,0000E-30	1,0000E-30	1,0000E-30	1,0000E-30	1,0000E-30
U-238	2,2124E-04	2,2124E-04	2,2124E-04	2,2124E-04	2,2124E-04
PU-239	1,0000E-30	1,0000E-30	1,0000E-30	1,0000E-30	1,0000E-30
PU-240	1,0000E-30	1,0000E-30	1,0000E-30	1,0000E-30	1,0000E-30
PU-241	1,0000E-30	1,0000E-30	1,0000E-30	1,0000E-30	1,0000E-30
PU-242	1,0000E-30	1,0000E-30	1,0000E-30	1,0000E-30	1,0000E-30
F.P.	1,0000E-30	1,0000E-30	1,0000E-30	1,0000E-30	1,0000E-30
XE-135	1,0000E-30	1,0000E-30	1,0000E-30	1,0000E-30	1,0000E-30
SM-149	1,0000E-30	1,0000E-30	1,0000E-30	1,0000E-30	1,0000E-30
H	4,0807E-02	4,0807E-02	4,0807E-02	4,0807E-02	4,0807E-02
O	2,0404E-02	2,0404E-02	2,0404E-02	2,0404E-02	2,0404E-02
AL	2,2475E-02	2,2475E-02	2,2475E-02	2,2475E-02	2,2475E-02

CHANNEL→ 10

BURN-UP BLOCK

NUCLIDE	1	2	3	4	5
	11	12			
U-235	1,8332E-04	1,8332E-04	1,8332E-04	1,8332E-04	1,8332E-04
	1,8332E-04	1,8332E-04			
U-236	1,0000E-30	1,0000E-30	1,0000E-30	1,0000E-30	1,0000E-30
	1,0000E-30	1,0000E-30			
U-238	2,2124E-04	2,2124E-04	2,2124E-04	2,2124E-04	2,2124E-04
	2,2124E-04	2,2124E-04			
PU-239	1,0000E-30	1,0000E-30	1,0000E-30	1,0000E-30	1,0000E-30
	1,0000E-30	1,0000E-30			
PU-240	1,0000E-30	1,0000E-30	1,0000E-30	1,0000E-30	1,0000E-30
	1,0000E-30	1,0000E-30			
PU-241	1,0000E-30	1,0000E-30	1,0000E-30	1,0000E-30	1,0000E-30
	1,0000E-30	1,0000E-30			
PU-242	1,0000E-30	1,0000E-30	1,0000E-30	1,0000E-30	1,0000E-30
	1,0000E-30	1,0000E-30			
F,P,	1,0000E-30	1,0000E-30	1,0000E-30	1,0000E-30	1,0000E-30
	1,0000E-30	1,0000E-30			
XE-135	1,0000E-30	1,0000E-30	1,0000E-30	1,0000E-30	1,0000E-30
	1,0000E-30	1,0000E-30			
SM-149	1,0000E-30	1,0000E-30	1,0000E-30	1,0000E-30	1,0000E-30
	1,0000E-30	1,0000E-30			
H	4,0807E-02	4,0807E-02	4,0807E-02	4,0807E-02	4,0807E-02
	4,0807E-02	4,0807E-02			
O	2,0404E-02	2,0404E-02	2,0404E-02	2,0404E-02	2,0404E-02
	2,0404E-02	2,0404E-02			
AL	2,2475E-02	2,2475E-02	2,2475E-02	2,2475E-02	2,2475E-02
	2,2475E-02	2,2475E-02			

NUCLIDE	6	7	8	9	10
U-235	1,8332E-04	1,8332E-04	1,8332E-04	1,8332E-04	1,8332E-04
U-236	1,0000E-30	1,0000E-30	1,0000E-30	1,0000E-30	1,0000E-30
U-238	2,2124E-04	2,2124E-04	2,2124E-04	2,2124E-04	2,2124E-04
PU-239	1,0000E-30	1,0000E-30	1,0000E-30	1,0000E-30	1,0000E-30
PU-240	1,0000E-30	1,0000E-30	1,0000E-30	1,0000E-30	1,0000E-30
PU-241	1,0000E-30	1,0000E-30	1,0000E-30	1,0000E-30	1,0000E-30
PU-242	1,0000E-30	1,0000E-30	1,0000E-30	1,0000E-30	1,0000E-30
F,P,	1,0000E-30	1,0000E-30	1,0000E-30	1,0000E-30	1,0000E-30
XE-135	1,0000E-30	1,0000E-30	1,0000E-30	1,0000E-30	1,0000E-30
SM-149	1,0000E-30	1,0000E-30	1,0000E-30	1,0000E-30	1,0000E-30
H	4,0807E-02	4,0807E-02	4,0807E-02	4,0807E-02	4,0807E-02
O	2,0404E-02	2,0404E-02	2,0404E-02	2,0404E-02	2,0404E-02
AL	2,2475E-02	2,2475E-02	2,2475E-02	2,2475E-02	2,2475E-02

```
*****************************************************************
AFTER STEP  1   TOTAL TIME   7,000 DAYS   BURN-UP    87,50 MWD
*****************************************************************
```

NUCLIDE NUMBER DENSITIES FOR EACH BURN-UP BLOCK

*** CHANNEL 1 ***

NUCLIDE	BURN-UP BLOCK 1	2	3	4	5
	11	12			
U-235	1,7553E-04	1,7167E-04	1,6884E-04	1,6697E-04	1,6574E-04
	9,7829E-31	9,8862E-31			
U-236	1,2717E-06	1,8979E-06	2,3564E-06	2,6576E-06	2,8554E-06
	1,0002E-30	1,0004E-30			
U-238	2,2064E-04	2,2035E-04	2,2012E-04	2,1998E-04	2,1988E-04
	9,9755E-31	9,9894E-31			
PU-239	5,5722E-07	8,1852E-07	1,0076E-06	1,1233E-06	1,2019E-06
	9,6094E-31	9,7887E-31			
PU-240	7,5132E-09	1,6502E-08	2,5240E-08	3,1796E-08	3,6571E-08
	9,2094E-31	9,6547E-31			
PU-241	2,7561E-10	9,0659E-10	1,7309E-09	2,4558E-09	3,0414E-09
	1,0408E-30	1,0144E-30			
PU-242	1,7343E-12	8,6524E-12	2,0727E-11	3,3419E-11	4,4655E-11
	1,0009E-30	1,0015E-30			
F.P.	6,5461E-06	9,7957E-06	1,2182E-05	1,3765E-05	1,4800E-05
	1,0830E-30	1,0437E-30			
XE-135	1,9033E-09	1,9066E-09	1,8954E-09	1,8834E-09	1,8752E-09
	5,0668E-35	4,4176E-35			
SM-149	1,9873E-08	1,9476E-08	1,9192E-08	1,8992E-08	1,8867E-08
	5,6475E-34	5,4801E-34			

NUCLIDE	6	7	8	9	10
U-235	1,6532E-04	9,2569E-31	9,4095E-31	9,5375E-31	9,6642E-31
U-236	2,9361E-06	1,0016E-30	1,0000E-30	9,9986E-31	1,0001E-30
U-238	2,1980E-04	9,9254E-31	9,9299E-31	9,9437E-31	9,9604E-31
PU-239	1,2756E-06	8,6695E-31	8,9613E-31	9,1858E-31	9,4028E-31
PU-240	3,9590E-08	7,8220E-31	7,9055E-31	8,2716E-31	8,7528E-31
PU-241	3,4883E-09	1,0786E-30	1,0994E-30	1,0883E-30	1,0646E-30
PU-242	5,2402E-11	1,0099E-30	1,0024E-30	1,0008E-30	1,0009E-30
F.P.	1,5147E-05	1,2907E-30	1,2293E-30	1,1784E-30	1,1289E-30
XE-135	1,8790E-09	5,3205E-35	5,5290E-35	5,5086E-35	5,3491E-35
SM-149	1,8888E-08	5,3858E-34	5,6498E-34	5,7108E-34	5,6859E-34

*** CHANNEL 7 ***

NUCLIDE	BURN-UP BLOCK 1	2	3	4	5
	11	12			
U-235	1,7744E-04	1,7442E-04	1,7207E-04	1,7041E-04	1,6959E-04
	1,7695E-04	1,7922E-04			
U-236	9,5931E-07	1,4507E-06	1,8323E-06	2,0998E-06	2,2324E-06
	1,0383E-06	6,6942E-07			
U-238	2,2080E-04	2,2057E-04	2,2038E-04	2,2026E-04	2,2019E-04
	2,2076E-04	2,2093E-04			
PU-239	4,2058E-07	6,2728E-07	7,8673E-07	8,9450E-07	9,4853E-07
	4,5110E-07	2,9433E-07			
PU-240	4,2892E-09	9,6917E-09	1,5364E-08	2,0041E-08	2,2600E-08
	4,9872E-09	2,0945E-09			
PU-241	1,1762E-10	4,0245E-10	8,0934E-10	1,2106E-09	1,4536E-09
	1,4719E-10	3,9869E-11			
PU-242	5,5483E-13	2,9091E-12	7,4596E-12	1,2874E-11	1,6484E-11
	7,5392E-13	1,3029E-13			
F.P.	4,9354E-06	7,4803E-06	9,4604E-06	1,0856E-05	1,1547E-05
	5,3487E-06	3,4419E-06			
XE-135	1,8807E-09	1,9062E-09	1,9065E-09	1,9009E-09	1,8974E-09
	1,8869E-09	1,8296E-09			
SM-149	2,0051E-08	1,9737E-08	1,9501E-08	1,9329E-08	1,9247E-08
	1,9985E-08	2,0223E-08			

NUCLIDE	6	7	8	9	10
U-235	1,6962E-04	1,7043E-04	1,7163E-04	1,7313E-04	1,7492E-04
U-236	2,2280E-06	2,0965E-06	1,9022E-06	1,6582E-06	1,3677E-06
U-238	2,2019E-04	2,2026E-04	2,2035E-04	2,2047E-04	2,2061E-04
PU-239	9,4687E-07	8,9390E-07	8,1386E-07	7,1247E-07	5,9079E-07
PU-240	2,2516E-08	1,9993E-08	1,6510E-08	1,2594E-08	8,6091E-09
PU-241	1,4454E-09	1,2066E-09	9,0192E-10	5,9792E-10	3,3600E-10
PU-242	1,6358E-11	1,2808E-11	8,6480E-12	4,9683E-12	2,2867E-12
F.P.	1,1524E-05	1,0838E-05	9,8270E-06	8,5597E-06	7,0532E-06
XE-135	1,8975E-09	1,9012E-09	1,9050E-09	1,9072E-09	1,9040E-09
SM-149	1,9250E-08	1,9333E-08	1,9453E-08	1,9603E-08	1,9782E-08

*** CHANNEL 10 ***

NUCLIDE	BURN-UP BLOCK 1	2	3	4	5
	11	12			
U-235	1,7914E-04	1,7686E-04	1,7512E-04	1,7392E-04	1,7328E-04
	1,7845E-04	1,8024E-04			
U-236	6,7259E-07	1,0376E-06	1,3166E-06	1,5088E-06	1,6116E-06
	7,8269E-07	4,9543E-07			
U-238	2,2096E-04	2,2082E-04	2,2070E-04	2,2062E-04	2,2058E-04
	2,2092E-04	2,2104E-04			
PU-239	2,6416E-07	4,0002E-07	5,0484E-07	5,7525E-07	6,1321E-07
	3,0142E-07	1,9419E-07			
PU-240	1,9003E-09	4,4555E-09	7,1441E-09	9,3409E-09	1,0641E-08
	2,5318E-09	1,0291E-09			
PU-241	3,3282E-11	1,1963E-10	2,4405E-10	3,6575E-10	4,4548E-10
	5,0900E-11	1,3194E-11			
PU-242	1,1101E-13	6,2302E-13	1,6253E-12	2,8058E-12	3,6602E-12
	1,9895E-13	3,2337E-14			
F.P.	3,5141E-06	5,4352E-06	6,9021E-06	7,9165E-06	8,4584E-06
	4,0999E-06	2,5890E-06			
XE-135	1,8110E-09	1,8632E-09	1,8772E-09	1,8800E-09	1,8802E-09
	1,8317E-09	1,7491E-09			
SM-149	1,9986E-08	1,9736E-08	1,9561E-08	1,9436E-08	1,9372E-08
	1,9886E-08	2,0088E-08			

NUCLIDE	6	7	8	9	10
U-235	1,7320E-04	1,7364E-04	1,7444E-04	1,7553E-04	1,7688E-04
U-236	1,6243E-06	1,5532E-06	1,4253E-06	1,2509E-06	1,0342E-06
U-238	2,2057E-04	2,2060E-04	2,2066E-04	2,2073E-04	2,2082E-04
PU-239	6,1784E-07	5,9043E-07	5,4294E-07	4,7794E-07	3,9648E-07
PU-240	1,0807E-08	9,8750E-09	8,3290E-09	6,4297E-09	4,4056E-09
PU-241	4,5602E-10	3,9751E-10	3,0718E-10	2,0770E-10	1,1734E-10
PU-242	3,7775E-12	3,1446E-12	2,2218E-12	1,3128E-12	6,1005E-13
F.P.	8,5258E-06	8,1525E-06	7,4792E-06	6,5609E-06	5,4213E-06
XE-135	1,8802E-09	1,8799E-09	1,8788E-09	1,8744E-09	1,8621E-09
SM-149	1,9363E-08	1,9405E-08	1,9485E-08	1,9594E-08	1,9729E-08

*** JMTR 93 ENRICHMENT 50 MW 3 STEP BURN-UP CALCULATION ***

FUEL ELEMENT 1 FUEL 1

CHANNEL NO, 1

TOTAL

2,195E-03	-----	BURN-UP	(MWD/CC)
3,685E+01	-----	U-235	(GRAM)
8,596E+01	-----	U-TOTAL	(GRAM)
2,274E-01	-----	PU-TOTAL	(GRAM)

BLOCK 1	BLOCK 2	BLOCK 3	BLOCK 4	BLOCK 5	BLOCK 6
2,340E-03	3,537E-03	4,432E-03	5,034E-03	5,430E-03	5,563E-03
6,378E+00	6,238E+00	6,135E+00	6,067E+00	6,022E+00	6,007E+00
1,454E+01	1,442E+01	1,432E+01	1,426E+01	1,422E+01	1,420E+01
2,088E-02	3,089E-02	3,824E-02	4,278E-02	4,589E-02	4,874E-02

BLOCK 7	BLOCK 8	BLOCK 9	BLOCK 10	BLOCK 11	BLOCK 12
1,049E-28	8,190E-29	6,360E-29	4,595E-29	2,959E-29	1,557E-29
3,364E-26	3,419E-26	3,466E-26	3,512E-26	3,555E-26	3,592E-26
1,067E-25	1,072E-25	1,077E-25	1,083E-25	1,088E-25	1,092E-25
1,390E-25	1,409E-25	1,426E-25	1,444E-25	1,459E-25	1,473E-25

FUEL ELEMENT 7 FUEL 7

CHANNEL NO, 7

TOTAL

3,030E-03	----- BURN-UP	(MWD/CC)
3,023E+02	----- U-235	(GRAM)
6,946E+02	----- U-TOTAL	(GRAM)
1,264E+00	----- PU-TOTAL	(GRAM)

BLOCK 1	BLOCK 2	BLOCK 3	BLOCK 4	BLOCK 5	BLOCK 6
1,756E-03	2,682E-03	3,413E-03	3,933E-03	4,193E-03	4,184E-03
2,579E+01	2,535E+01	2,501E+01	2,477E+01	2,465E+01	2,465E+01
5,843E+01	5,803E+01	5,772E+01	5,750E+01	5,739E+01	5,739E+01
6,282E-02	9,422E-02	1,187E-01	1,354E-01	1,438E-01	1,435E-01

BLOCK 7	BLOCK 8	BLOCK 9	BLOCK 10	BLOCK 11	BLOCK 12
3,926E-03	3,549E-03	3,079E-03	2,525E-03	1,905E-03	1,219E-03
2,477E+01	2,495E+01	2,516E+01	2,542E+01	2,572E+01	2,605E+01
5,750E+01	5,766E+01	5,786E+01	5,810E+01	5,837E+01	5,867E+01
1,353E-01	1,229E-01	1,073E-01	8,866E-02	6,744E-02	4,382E-02

FUEL ELEMENT 10 FUEL 10

CHANNEL NO. 10

TOTAL

2.239E-03	----- BURN-UP	(MWD/CC)
3.068E+02	----- U-235	(GRAM)
6.988E+02	----- U-TOTAL	(GRAM)
8.217E-01	----- PU-TOTAL	(GRAM)

BLOCK 1	BLOCK 2	BLOCK 3	BLOCK 4	BLOCK 5	BLOCK 6
1.245E-03	1.937E-03	2.471E-03	2.843E-03	3.043E-03	3.068E-03
2.604E+01	2.571E+01	2.545E+01	2.528E+01	2.519E+01	2.517E+01
5.866E+01	5.836E+01	5.813E+01	5.797E+01	5.789E+01	5.788E+01
3.933E-02	5.981E-02	7.572E-02	8.648E-02	9.229E-02	9.300E-02

BLOCK 7	BLOCK 8	BLOCK 9	BLOCK 10	BLOCK 11	BLOCK 12
2.930E-03	2.682E-03	2.346E-03	1.932E-03	1.455E-03	9.145E-04
2.524E+01	2.535E+01	2.551E+01	2.571E+01	2.594E+01	2.620E+01
5.794E+01	5.804E+01	5.819E+01	5.836E+01	5.857E+01	5.881E+01
8.880E-02	8.154E-02	7.163E-02	5.928E-02	4.494E-02	2.886E-02

```
*****************************************************************
AFTER STEP   3   TOTAL TIME  21,000 DAYS   BURN-UP   262,50 MWD
*****************************************************************
```

NUCLIDE NUMBER DENSITIES FOR EACH BURN-UP BLOCK

*** CHANNEL 1 ***

NUCLIDE	BURN-UP BLOCK 1 / 11	2 / 12	3	4	5
U-235	1,6000E-04	1,4891E-04	1,4105E-04	1,3612E-04	1,3295E-04
	9,3560E-31	9,6591E-31			
U-236	3,7880E-06	5,5602E-06	6,8063E-06	7,5803E-06	8,0775E-06
	1,0002E-30	1,0010E-30			
U-238	2,1938E-04	2,1846E-04	2,1778E-04	2,1736E-04	2,1708E-04
	9,9254E-31	9,9676E-31			
PU-239	1,5876E-06	2,2159E-06	2,6220E-06	2,8473E-06	2,9899E-06
	8,8655E-31	9,3745E-31			
PU-240	6,3939E-08	1,3220E-07	1,9255E-07	2,3384E-07	2,6240E-07
	7,7924E-31	8,9860E-31			
PU-241	7,1817E-09	2,1900E-08	3,9240E-08	5,3076E-08	6,3560E-08
	1,0981E-30	1,0389E-30			
PU-242	1,4637E-10	7,0101E-10	1,6149E-09	2,5113E-09	3,2729E-09
	1,0037E-30	1,0046E-30			
F.P.	1,9659E-05	2,9101E-05	3,5823E-05	4,0057E-05	4,2783E-05
	1,2506E-30	1,1317E-30			
XE-135	1,7639E-09	1,6856E-09	1,6173E-09	1,5708E-09	1,5403E-09
	5,0329E-35	4,3996E-35			
SM-149	1,8356E-08	1,7207E-08	1,6396E-08	1,5880E-08	1,5549E-08
	5,5944E-34	5,4355E-34			

NUCLIDE	6	7	8	9	10
U-235	1,3206E-04	7,8730E-31	8,2959E-31	8,6531E-31	9,0135E-31
U-236	8,2501E-06	1,0022E-30	9,9822E-31	9,9838E-31	9,9951E-31
U-238	2,1683E-04	9,7735E-31	9,7873E-31	9,8289E-31	9,8796E-31
PU-239	3,1514E-06	6,4461E-31	7,1583E-31	7,7265E-31	8,2995E-31
PU-240	2,7852E-07	4,8038E-31	4,9609E-31	5,6616E-31	6,6929E-31
PU-241	7,1261E-08	1,0566E-30	1,1336E-30	1,1506E-30	1,1332E-30
PU-242	3,7468E-09	1,0341E-30	1,0128E-30	1,0067E-30	1,0051E-30
F.P.	4,3542E-05	1,8546E-30	1,6856E-30	1,5375E-30	1,3889E-30
XE-135	1,5387E-09	4,6739E-35	5,1317E-35	5,2833E-35	5,2430E-35
SM-149	1,5526E-08	4,7209E-34	5,2328E-34	5,4652E-34	5,5603E-34

*** CHANNEL 7 ***

NUCLIDE	BURN-UP BLOCK 1	2	3	4	5
	11	12			
U-235	1,6538E-04	1,5644E-04	1,4972E-04	1,4524E-04	1,4305E-04
	1,6407E-04	1,7079E-04			
U-236	2,9196E-06	4,3542E-06	5,4270E-06	6,1392E-06	6,4865E-06
	3,1293E-06	2,0426E-06			
U-238	2,1983E-04	2,1911E-04	2,1855E-04	2,1817E-04	2,1798E-04
	2,1973E-04	2,2027E-04			
PU-239	1,2421E-06	1,7782E-06	2,1555E-06	2,3925E-06	2,5039E-06
	1,3190E-06	8,8726E-07			
PU-240	3,8604E-08	8,3024E-08	1,2607E-07	1,5861E-07	1,7567E-07
	4,3964E-08	1,9188E-08			
PU-241	3,3039E-09	1,0630E-08	2,0227E-08	2,8891E-08	3,3856E-08
	4,0248E-09	1,1440E-09			
PU-242	5,0430E-11	2,5505E-10	6,2987E-10	1,0454E-09	1,3122E-09
	6,6329E-11	1,1846E-11			
F.P.	1,5105E-05	2,2682E-05	2,8405E-05	3,2235E-05	3,4111E-05
	1,6214E-05	1,0530E-05			
XE-135	1,7832E-09	1,7411E-09	1,6913E-09	1,6537E-09	1,6343E-09
	1,7801E-09	1,7747E-09			
SM-149	1,8886E-08	1,7963E-08	1,7274E-08	1,6815E-08	1,6588E-08
	1,8745E-08	1,9437E-08			

NUCLIDE	6	7	8	9	10
U-235	1,4318E-04	1,4551E-04	1,4887E-04	1,5310E-04	1,5817E-04
U-236	6,4647E-06	6,0974E-06	5,5643E-06	4,8899E-06	4,0775E-06
U-238	2,1799E-04	2,1819E-04	2,1847E-04	2,1883E-04	2,1925E-04
PU-239	2,4976E-06	2,3846E-06	2,2080E-06	1,9747E-06	1,6791E-06
PU-240	1,7460E-07	1,5677E-07	1,3212E-07	1,0351E-07	7,3195E-08
PU-241	3,3540E-08	2,8419E-08	2,1814E-08	1,4968E-08	8,7775E-09
PU-242	1,2945E-09	1,0188E-09	6,9888E-10	4,1068E-10	1,9499E-10
F.P.	3,3993E-05	3,2001E-05	2,9133E-05	2,5525E-05	2,1212E-05
XE-135	1,6356E-09	1,6565E-09	1,6850E-09	1,7183E-09	1,7526E-09
SM-149	1,6603E-08	1,6848E-08	1,7195E-08	1,7630E-08	1,8145E-08

*** CHANNEL 10 ***

NUCLIDE	BURN-UP BLOCK 1	2	3	4	5
	11	12			
U-235	1,7009E-04	1,6304E-04	1,5780E-04	1,5441E-04	1,5260E-04
	1,6809E-04	1,7362E-04			
U-236	2,1271E-06	3,2485E-06	4,0792E-06	4,6157E-06	4,9000E-06
	2,4427E-06	1,5615E-06			
U-238	2,2034E-04	2,1986E-04	2,1949E-04	2,1924E-04	2,1911E-04
	2,2021E-04	2,2058E-04			
PU-239	8,2115E-07	1,2043E-06	1,4797E-06	1,6538E-06	1,7425E-06
	9,2189E-07	6,0898E-07			
PU-240	1,8722E-08	4,2429E-08	6,5875E-08	8,3481E-08	9,3581E-08
	2,4254E-08	1,0148E-08			
PU-241	1,0604E-09	3,6458E-09	7,1282E-09	1,0265E-08	1,2228E-08
	1,5598E-09	4,1983E-10			
PU-242	1,1673E-11	6,3890E-11	1,6167E-10	2,6833E-10	3,4300E-10
	1,9974E-11	3,3293E-12			
F.P.	1,1145E-05	1,7117E-05	2,1562E-05	2,4445E-05	2,5980E-05
	1,2837E-05	8,1686E-06			
XE-135	1,7560E-09	1,7508E-09	1,7235E-09	1,7008E-09	1,6873E-09
	1,7598E-09	1,7246E-09			
SM-149	1,9121E-08	1,8379E-08	1,7845E-08	1,7504E-08	1,7320E-08
	1,8891E-08	1,9474E-08			

NUCLIDE	6	7	8	9	10
U-235	1,5243E-04	1,5378E-04	1,5615E-04	1,5937E-04	1,6334E-04
U-236	4,9271E-06	4,7134E-06	4,3393E-06	3,8300E-06	3,1993E-06
U-238	2,1910E-04	2,1920E-04	2,1937E-04	2,1960E-04	2,1989E-04
PU-239	1,7506E-06	1,6826E-06	1,5647E-06	1,3995E-06	1,1847E-06
PU-240	9,4560E-08	8,6796E-08	7,4071E-08	5,8244E-08	4,1069E-08
PU-241	1,2424E-08	1,0892E-08	8,5478E-09	5,9214E-09	3,4685E-09
PU-242	3,5080E-10	2,9183E-10	2,0787E-10	1,2472E-10	5,9740E-11
F.P.	2,6126E-05	2,4976E-05	2,2959E-05	2,0225E-05	1,6860E-05
XE-135	1,6859E-09	1,6959E-09	1,7128E-09	1,7331E-09	1,7518E-09
SM-149	1,7302E-08	1,7439E-08	1,7682E-08	1,8011E-08	1,8408E-08

*** JMTR 93 ENRICHMENT 50 MW 3 STEP BURN-UP CALCULATION ***

BURN-UP BLOCK RELATIVE POWER

BURN-UP BLOCK	CHANNEL 1	2	3	4	5
1	8,1371E-01	7,4150E-01	5,9362E-01	7,8061E-01	4,9701E-01
2	1,2086E+00	1,1175E+00	8,9902E-01	1,1734E+00	7,5816E-01
3	1,4883E+00	1,4032E+00	1,1255E+00	1,4711E+00	9,5186E-01
4	1,6603E+00	1,5894E+00	1,2688E+00	1,6655E+00	1,0741E+00
5	1,7692E+00	1,6584E+00	1,3330E+00	1,7413E+00	1.1295E+00
6	1.7902E+00	1,6012E+00	1,3157E+00	1.6890E+00	1,1159E+00
7	3,5633E-26	1,3993E+00	1,2283E+00	1,4862E+00	1,0403E+00
8	2,8628E-26	1,2300E+00	1,1073E+00	1,3148E+00	9,3910E-01
9	2,2414E-26	1,0636E+00	9,6444E-01	1,1413E+00	8,1953E-01
10	1,6166E-26	8,9440E-01	8,0238E-01	9,5941E-01	6,8329E-01
11	1,0392E-26	6,9050E-01	6,1169E-01	7,4110E-01	5,2110E-01
12	5,4347E-27	4,4995E-01	3,9374E-01	4,8429E-01	3,3366E-01

BURN-UP BLOCK	6	7	8	9	10
1	7,3974E-01	6,2887E-01	6,7262E-01	6,0073E-01	4,7009E-01
2	1,1080E+00	9,4600E-01	1,0173E+00	9,0982E-01	7,2341E-01
3	1,3834E+00	1,1836E+00	1,2738E+00	1,1406E+00	9,1076E-01
4	1,5634E+00	1,3383E+00	1,4387E+00	1,2898E+00	1,0272E+00
5	1,6514E+00	1,4140E+00	1,5272E+00	1,3698E+00	1,0897E+00
6	1,6460E+00	1,4084E+00	1,5372E+00	1,3789E+00	1,0952E+00
7	1,5561E+00	1,3260E+00	1,4741E+00	1,3228E+00	1,0475E+00
8	1,4213E+00	1,2091E+00	1,3605E+00	1,2201E+00	9,6400E-01
9	1,2494E+00	1,0620E+00	1,2033E+00	1,0782E+00	8,5107E-01
10	1,0425E+00	8,8605E-01	1,0083E+00	9,0216E-01	7,1340E-01
11	7,9937E-01	6,7874E-01	7,7248E-01	6,9047E-01	5,4436E-01
12	5,2100E-01	4,4139E-01	4,9965E-01	4,4617E-01	3,4662E-01

JMTR 93 ENRICHMENT 50 MW 3 STEP BURN-UP CALCULATION ***

BURN-UP BLOCK RELATIVE POWER

BURN-UP BLOCK	CHANNEL 1	2	3	4	5
1	8,0689E-01	7,2960E-01	5,7250E-01	7,6966E-01	4,7418E-01
2	1,2197E+00	1,1193E+00	8,7930E-01	1,1786E+00	7,3255E-01
3	1,5282E+00	1,4329E+00	1,1181E+00	1,5076E+00	9,3306E-01
4	1,7357E+00	1,6594E+00	1,2848E+00	1,7454E+00	1,0724E+00
5	1,8725E+00	1,7459E+00	1,3603E+00	1,8410E+00	1,1364E+00
6	1,9182E+00	1,6845E+00	1,3434E+00	1,7854E+00	1,1238E+00
7	3,6170E-26	1,4577E+00	1,2489E+00	1,5556E+00	1,0436E+00
8	2,8242E-26	1,2649E+00	1,1154E+00	1,3587E+00	9,3414E-01
9	2,1930E-26	1,0770E+00	9,5951E-01	1,1612E+00	8,0585E-01
10	1,5844E-26	8,8899E-01	7,8411E-01	9,5809E-01	6,6069E-01
11	1,0203E-26	6,7533E-01	5,8906E-01	7,2781E-01	4,9680E-01
12	5,3697E-27	4,3246E-01	3,7328E-01	4,6718E-01	3,1357E-01

BURN-UP BLOCK	6	7	8	9	10
1	7,2259E-01	6,0536E-01	6,5187E-01	5,7490E-01	4,2923E-01
2	1,1015E+00	9,2472E-01	1,0011E+00	8,8318E-01	6,6783E-01
3	1,4009E+00	1,1767E+00	1,2748E+00	1,1247E+00	8,5196E-01
4	1,6147E+00	1,3563E+00	1,4702E+00	1,2973E+00	9,8028E-01
5	1,7215E+00	1,4458E+00	1,5758E+00	1,3906E+00	1,0492E+00
6	1,7194E+00	1,4428E+00	1,5912E+00	1,4043E+00	1,0578E+00
7	1,6211E+00	1,3539E+00	1,5236E+00	1,3458E+00	1,0103E+00
8	1,4665E+00	1,2237E+00	1,3960E+00	1,2331E+00	9,2487E-01
9	1,2721E+00	1,0617E+00	1,2206E+00	1,0781E+00	8,0898E-01
10	1,0429E+00	8,7078E-01	1,0039E+00	8,8657E-01	6,6610E-01
11	7,8662E-01	6,5689E-01	7,5740E-01	6,6874E-01	5,0169E-01
12	5,0374E-01	4,2026E-01	4,8198E-01	4,2540E-01	3,1534E-01

*** JMTR 93 ENRICHMENT 50 MW 3 STEP BURN-UP CALCULATION ***

FUEL ELEMENT 1 FUEL 1

CHANNEL NO, 1

TOTAL		
6.444E-03	BURN-UP	(MWD/CC)
3.093E+01	U-235	(GRAM)
8.048E+01	U-TOTAL	(GRAM)
6.228E-01	PU-TOTAL	(GRAM)

BLOCK 1	BLOCK 2	BLOCK 3	BLOCK 4	BLOCK 5	BLOCK 6
7.045E-03	1.055E-02	1.310E-02	1.474E-02	1.580E-02	1.609E-02
5.814E+00	5.411E+00	5.125E+00	4.946E+00	4.831E+00	4.799E+00
1.403E+01	1.365E+01	1.339E+01	1.322E+01	1.311E+01	1.308E+01
6.132E-02	8.764E-02	1.056E-01	1.160E-01	1.227E-01	1.296E-01

BLOCK 7	BLOCK 8	BLOCK 9	BLOCK 10	BLOCK 11	BLOCK 12
3.134E-28	2.484E-28	1.935E-28	1.394E-28	8.962E-29	4.700E-29
2.861E-26	3.014E-26	3.144E-26	3.275E-26	3.400E-26	3.510E-26
1.011E-25	1.026E-25	1.040E-25	1.056E-25	1.070E-25	1.083E-25
1.197E-25	1.250E-25	1.301E-25	1.353E-25	1.402E-25	1.443E-25

FUEL ELEMENT 7 FUEL 7

CHANNEL NO. 7

TOTAL

9.082E-03	----- BURN-UP	(MWD/CC)
2.679E+02	----- U-235	(GRAM)
6.630E+02	----- U-TOTAL	(GRAM)
3.626E+00	----- PU-TOTAL	(GRAM)

BLOCK 1	BLOCK 2	BLOCK 3	BLOCK 4	BLOCK 5	BLOCK 6
5.384E-03	8.158E-03	1.029E-02	1.174E-02	1.245E-02	1.240E-02
2.404E+01	2.274E+01	2.176E+01	2.111E+01	2.079E+01	2.081E+01
5.682E+01	5.563E+01	5.473E+01	5.412E+01	5.383E+01	5.384E+01
1.898E-01	2.768E-01	3.405E-01	3.817E-01	4.015E-01	4.003E-01

BLOCK 7	BLOCK 8	BLOCK 9	BLOCK 10	BLOCK 11	BLOCK 12
1.165E-02	1.056E-02	9.213E-03	7.616E-03	5.786E-03	3.733E-03
2.115E+01	2.164E+01	2.225E+01	2.299E+01	2.385E+01	2.482E+01
5.416E+01	5.461E+01	5.518E+01	5.586E+01	5.665E+01	5.755E+01
3.801E-01	3.494E-01	3.096E-01	2.604E-01	2.021E-01	1.342E-01