JAERI-M
93-087

TEST OF THE COLD TRAPS IN THE JAERI FUEL CLEANUP SYSTEM IN THE TRITIUM SYSTEMS TEST ASSEMBLY

March 1993

Shigeru O'HIRA*, Satoshi KONISHI, Yuji NARUSE
Kenji OKUNO, J. W. BARNES**, W. HARBIN**
J. R. BARTLIT** and J. L. ANDERSON**

日 本 原 子 力 研 究 所
Japan Atomic Energy Research Institute

JAERI-Mレポートは，日本原子力研究所が不定期に公刊している研究報告書です。
入手の問合わせは，日本原子力研究所技術情報部情報資料課（〒319-11茨城県那珂郡東海村）あて，お申しこしください。なお，このほかに財団法人原子力弘済会資料センター（〒319-11茨城県那珂郡東海村日本原子力研究所内）で複写による実費頒布をおこなっております。

JAERI-M reports are issued irregularly.
Inquiries about availability of the reports should be addressed to Information Division, Department of Technical Information, Japan Atomic Energy Research Institute, Tokai-mura, Naka-gun, Ibaraki-ken 319-11, Japan.

編集兼発行　日本原子力研究所
印　　刷　㈱原子力資料サービス

Test of the Cold Traps in the JAERI Fuel Cleanup System in the Tritium Systems Test Assembly

Shigeru O'HIRA*, Satoshi KONISHI, Yuji NARUSE
Kenji OKUNO, J.W. BARNES**, W. HARBIN**
J.R. BARTLIT** and J.L. ANDERSON**

Department of Fusion Engineering Research
Naka Fusion Research Establishment
Japan Atomic Energy Research Institute
Naka-machi, Naka-gun, Ibaraki-ken

(Received March 8, 1993)

A plasma exhaust processing subsystem, JAERI Fuel Cleanup (JFCU) is a major subsystem of the TSTA fuel loop. The cold traps in the process are designed to capture tritiated water and separate it from tritium free gas stream. In the deuterium testing of the JFCU, the cold traps worked poorly when it is switched over for regeneration. Tests were conducted to investigate this process and solve the problem. Changing packing of the traps or valve sequence did not improve the trapping efficiency. It was decided to install small molecular sieve beds to improve the characteristics of the entire process.

Keywords: Nuclear Fusion, Tritium, TSTA, Fusion Fuel Cycle, Oxidation, Cold Trap, Tritiated Water, Trapping, Molecular Sieves, Adsorption

---

*1 Attached to the Science and Technology Authority
*2 Los Alamos National Laboratory

ＴＳＴＡ用原研製燃料精製システムのコールドトラップ試験

日本原子力研究所那珂研究所核融合工学部
大平　茂*・小西　哲之・成瀬　雄二・奥野　健二
J.W.BARNES**・W.HARBIN**・J.R.BARTLIT**
J.L.ANDERSON**

（1993年３月８日受理）

原研は日米協力協定Annex Ⅳに基づいて米国ロスアラモス国立研究所のトリチウムシステム試験施設（ＴＳＴＡ）において核融合炉燃料ループの模擬試験を共同で行っており，その一環として原研製の燃料精製システムを設計，製作してＴＳＴＡに設置，結合した。この装置に於てトリチウム化不純物を処理して生成するトリチウム水を捕集するトラップに機能不全が疑われたため，特性を試験し，さらに運転上の対応策を検証した。トラップは切り替え時に水分が通過するが，これは一次的な捕集率の低下によるもので，内部構造の変更やバルブシーケンスによっては改善されない。運転上トリチウムの損失を防止するため，小型のモレキュラーシーブ塔を設置することが最良の対応策と判明した。

那珂研究所：〒311-01　茨城県那珂郡那珂町大字向山801-1
*　科学技術庁出向中
**　ロスアラモス国立研究所

Contents

目　　次

I. Introduction

Annex IV to the Implementing Arrangement between the Japan Atomic Energy Research Institute and the United States Department of Energy on Cooperation in Fusion Research and Development was signed in June 1987 for the joint research on the fusion fuel processing technology. Under this agreement, JAERI and DOE jointly fund and operate the Tritium Systems Test Assembly (TSTA) at the Los Alamos National Laboratory , that is a working prototype of a fuel processing loop for a fusion reactor.

In the second phase of the collaboration, a complete plasma exhaust processing subsystem, (JAERI Fuel Cleanup, JFCU) was designed and fabricated by JAERI for the test in the TSTA fuel loop. The apparatus of the JFCU was installed in the TSTA in early 1990, and test of the major components without tritium initiated to evaluate the function and performance, and to uncover any technical problems for improvements. This report describes the test plan and result on the cold trapps in the JFCU, that are desiged to capture tritiated water generated from the ritiated impurities. Three cold traps are alternatively operated in trapping, regeneration and precooling cycle with approximately 60 minutes periods. It was suspected that the traps did not work as expected when they were switched over.

II. Test Plan TTA-TP-118-03

TEST PLAN
COMPONENT TEST OF THE JFCU COLD TRAPS

1. Purpose

The purpose of this test is to solve the problem of the high humidity spike that occurs when cold traps are switched.

The internals of the traps will be changed and their performance will be

2. Configuration

The JFCU flow loop will be configured as shown in Figure 1 (bold lines). The system will be operated with "unit mode". The cold trap is shown in Figure 2. Four new designs for the trap internals will be tested. One of the present traps will be used as a reference and two will be tested with new internals. The design changes to be tested are given separately.

3. Subsystem required

The following utility systems will be required; helium, oxygen, hydrogen, liquid nitrogen, high pressure nitrogen gas, power and the Alcatel vacuum pump (substitution of PEV). TWT or PEV will not be used.

4. Personnel

The following personel will be responsible for conducting this test; S. O'hira, S. Konishi, J. Barnes, S. Willms, K. Binning (LO), W. Harbin and other JAERI and TSTA staff assigned as required.

5. Schedule

The new cold trap internals shall be complete before this test starts. The test will start middle of May. It will require 3 or 4 days to test several combination of traps.

6. Possible hazard

Explosion of hydrogen gas is a possible hazard. The amounts of hydrogen and oxygen in the helium stream are controlled with mass-flow controllers. The percentage of hydrogen in the helium stream shall not exceed 5%. The order of valve opening for gas supply to the JFCU shall be He first, O2 second and H2 last. Shut down of gas supply shall be in reverse order.

7. Outline

This cold trap test will be carried out similar to that described in the section 1 of "PROCEDURE OF THE JAERI FUEL CLEANUP SYSTEM - STAND ALONE DEUTERIUM OPERATION" (TTA-TP-118-01, R0, 3/2/90). The difference between the procedure of this test and the one above is the performance of the traps will be checked with different inner structure at different flow rates. Three runs (15, 10 and 7 l/min) with 2 cycles (6 hours) are scheduled for each combination of traps. The brief procedure

1) Utility preparation (N2, LN2, He, O2, H2)
2) Start VAX computer
3) Evacuation
4) Heat traps and catalytic reactor JCRI
5) Start Freon refrigerator
6) Supply He
7) Set up traps (cool down traps and set operation mode)
8) Start Metal Bellows Pump
9) Supply gas (O2 & H2) to make water
10) Run for 2 cycles (6 hours)
11) Record trends
12) Stop gas supply and the MBP (Keep refrigerator running).
13) Shut down.

Some tests may be carried out using Motor Valves to control flow through the trap.

The DETAILED TEST PROCEDURE is attached to this document.

8. Data collection

FRC-JCRIBYP: process flow
FRC-CECIN: flow for regeneration of cold traps
FRC-TWTINL: flow to TWT
FR-JCRIOX: oxygen flow
FR-D2SUP: hydrogen (deuterium) flow
PR-JCRIIN: pressure at inlet of JCRI
PDRC-CT: differencial pressure between inlet and outlet of CT
PRCA-JFCUEX: pressure at the JFCU exit
TLRCA-CT(1-3)(IN,L,U): temperatures of cold traps

TLRCA-JCRI: temperature of JCRI
ORA-JCRIIN: oxygen concentration at JCRI inlet
ORCA-JCRIEX: oxygen concentration at JCRI outlet
HLR-JCRIIN: humidity at JCRI inlet
HLR-JCRIEX: humidity at JCRI outlet
HLR-CTEX: humidity at the exit of cold traps
HLR-CECIN: humidity at the inlet of CEC

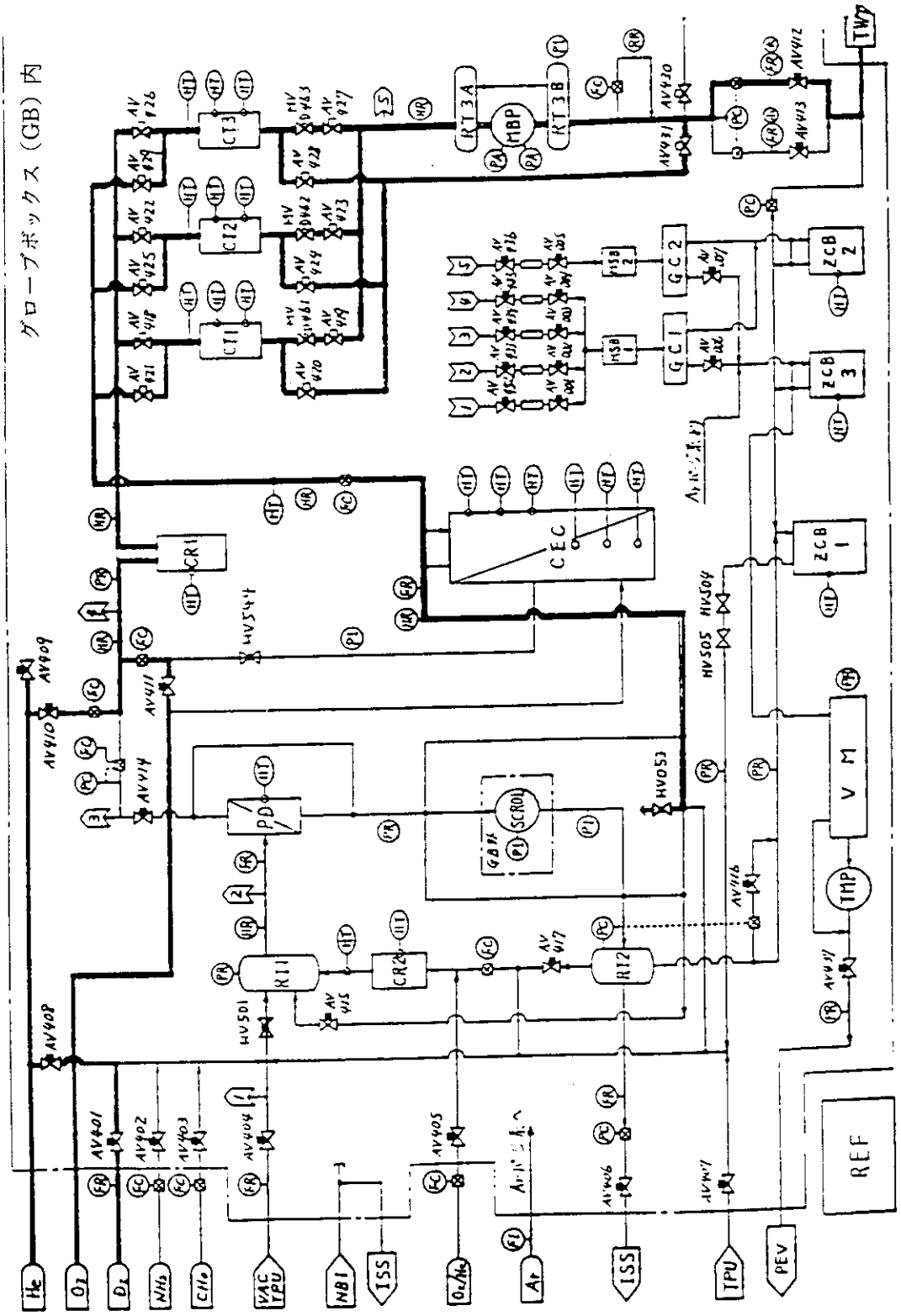

The exavst gas is by passed CEC and dumped through HV053

Figure 1

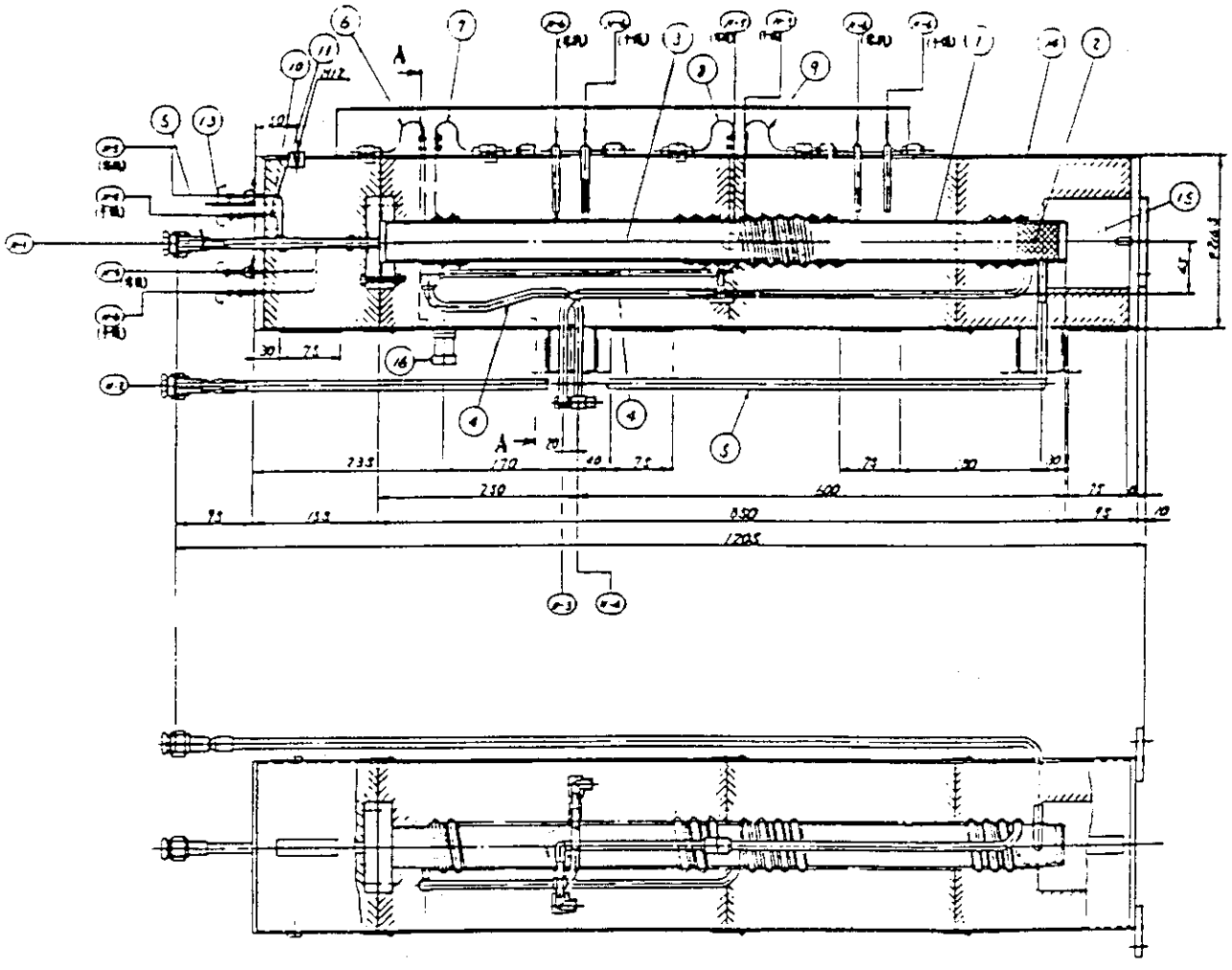

Figure 2

Ⅲ. Test Report

TEST REPORT
JFCU COLD TRAP COMPONENT TEST

BY

S. O'hira

JFCU cold trap component tests were carried out to solve the problem of the high humidity spike that occurred when cold traps were switched. Some modification of the traps and several series of and tests were conducted from July 5 to December 21 1990. At first, the internals of the traps and timing of valve operations were changed. However, there were no significant improvement. Finally the problem was solved by installation of a small molecular sieve bed at the exit of each cold trap.

Figure 1 shows the schematic drawing of the JFCU. There are three cold traps (CT1-3) downstream of the catalytic reactor (CR1). CR1 oxidizes impurities (methane, ammonia, etc.) or residual hydrogen isotopes separated by the palladium diffuser (PD). One of the cold traps is on the flow path from CR1. It traps water in the carrier gas, produced by the oxidation that occurs in CR1. After trapping for a certain interval, the path is switched to the other cold trap. The cold trap which trapped water is switched to the regeneration flow path. In the regeneration mode the cold trap is heated and the water is removed from the trap and sent to the ceramic electrolysis cell (CEC).

Cold trap operating specifications are as follows:

(A) trapping

carrier gas	: He
flow rate	: 40 mol/h
pressure	: 1 atm
inlet gas temperature	: 40 C
cold trap temperature	: -110 C
trapping time	: 1 h
inlet water flow	: 0.8 mol/h
outlet water flow	: $4X10^{-6}$ mol/h
removal	: 99.9995%

(B) regeneration

carrier gas	: He
flow rate	: 15 mol/h
pressure	: 1 atm
inlet gas temperature	: 20 C
cold trap temperature	: 70 C.

The cold trap (dimensions, internals, Freon cooling and heating system) was designed by MHI. Figure 2 shows the initial cold trap. There is a filter (20 micron) at the bottom of the trap. The inside is filled up with copper balls (8 and 5 mm in diameter).

The tests reported here and original MHI tests were carried out under the same condition as the ones above as regards carrier gas, flow rate, pressure, trapping time, inlet water concentration and temperatures (temperature for regeneration was changed to 90 C later).

Figure 3 shows a typical data trend of cyclic operation obtained for the JFCU inspection test carried out in March 1990 at TSTA. A humidity spike was observed whenever the cold trap was switched. The peak almost reached 250 KDP (400 ppm) and humidity decreased slowly to about 205 KDP (1 ppm).

There would be no humid gas downstream of the cold trap under cyclic operation. It is believed that the humidity spike is caused by water going through the trap in unknown form as supercooled water vapor or sub-micron frost which can go through the filter in the carrier gas.

The first modification tested to remove the humidity spike was to change the internal packing to trap water more efficiently. Linear velocity of the gas in the cold trap was decreased and increase surface area of the internals was increased. Tests were carried out with several types of internal, however there was no significant improvement.

The second modification was to change timing of valve operation to prevent rapid pressure changes and provide sufficient time to cool the gas inside the cold trap. Several valve operation sequences were tested. Motor-drive valves were used to control flow switching. However, there was no significant improvement.

The third modification put about 15 g of molecular sieve (5A) in the pipe at the cold trap exit to remove water in the carrier gas by absorption. A heater was wounded around the pipe to regenerate molecular sieve. Tests for several cycles showed molecular sieve the removed humidity spike much better than any other method (see figure 4).

Figure 5 shows a typical data trend for cyclic operation during the JFCU loop run carried out in December 1990. Each cold trap had a small molecular sieve (4A, 10 g) bed with an externally wound heater at its exit (figure 6). There was no humidity spike when the trap was switched. Very low humidity was maintained at the exit of the cold trap.

A small molecular sieve bed solved the problem of the humidity spike. There are a few things to be noted:

1) each molecular sieve bed has two 2 micron filter at each end which cause over 350 Torr of pressure drop between the inlet and outlet of the cold trap.
2) JFCU application software will be changed before hot runs to control the molecular sieve bed regeneration heaters through OMEGA temperature controllers.

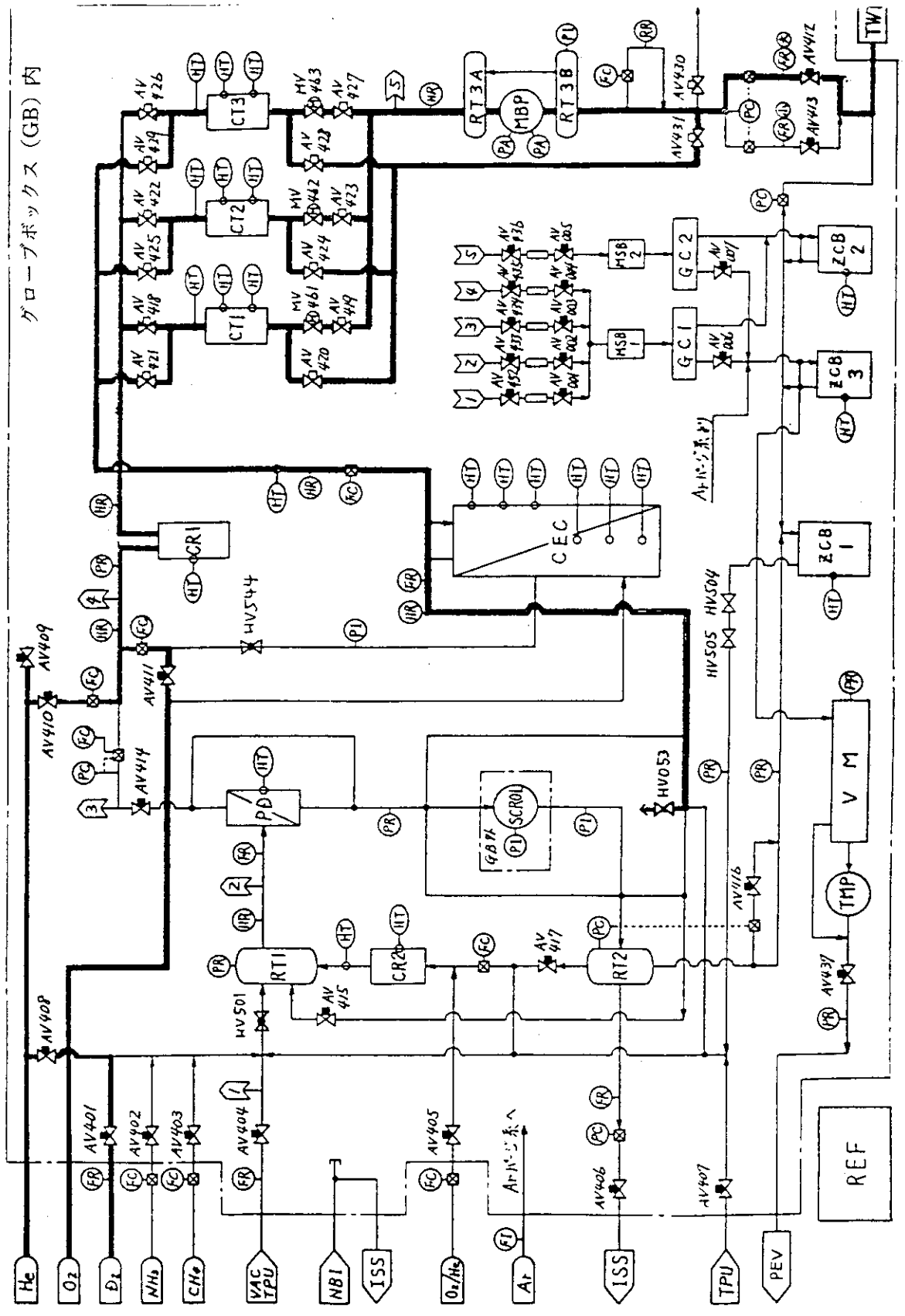

Fig. 1 Schematic drawing of JFCU

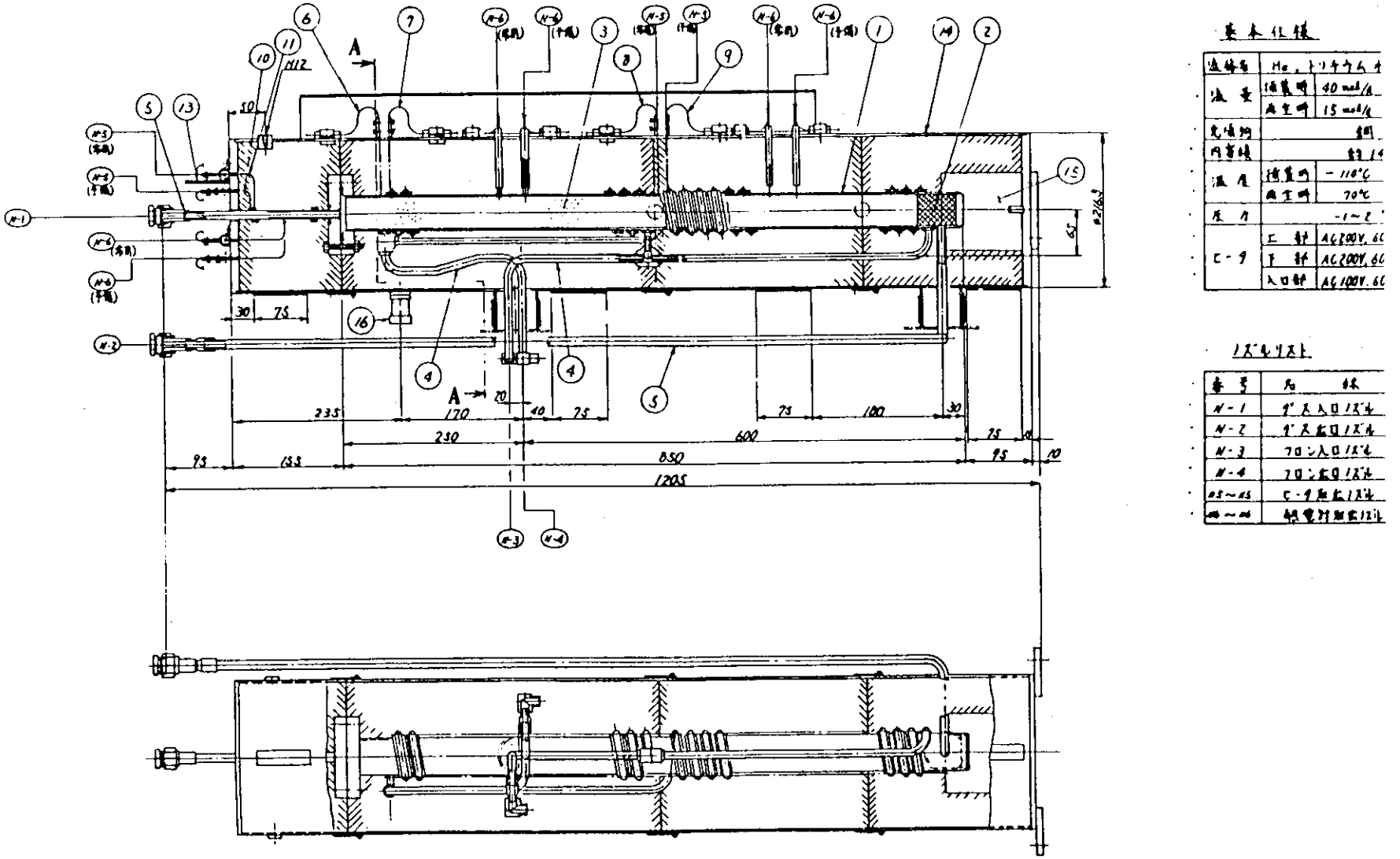

Fig. 2 Intersection of the cold trap

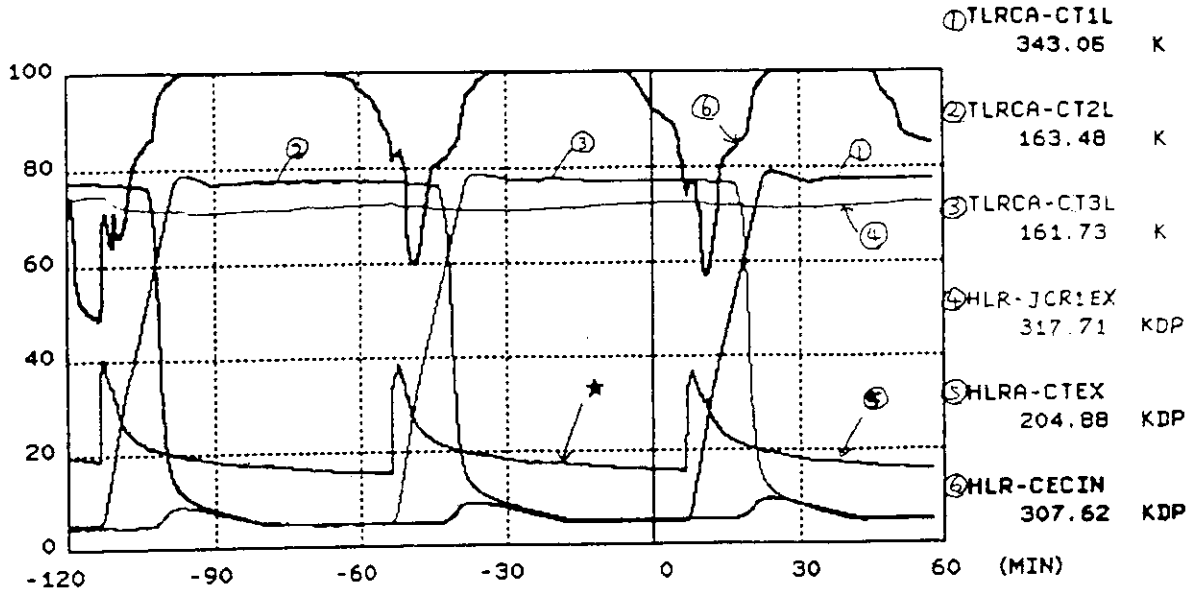

Fig. 3 A typical data trend of cyclic operation obtained for the JFCU inspection test carried out in march 1990 at TSTA. The trend marked with '*' is the one of the humidity at the exit of the cold trap.

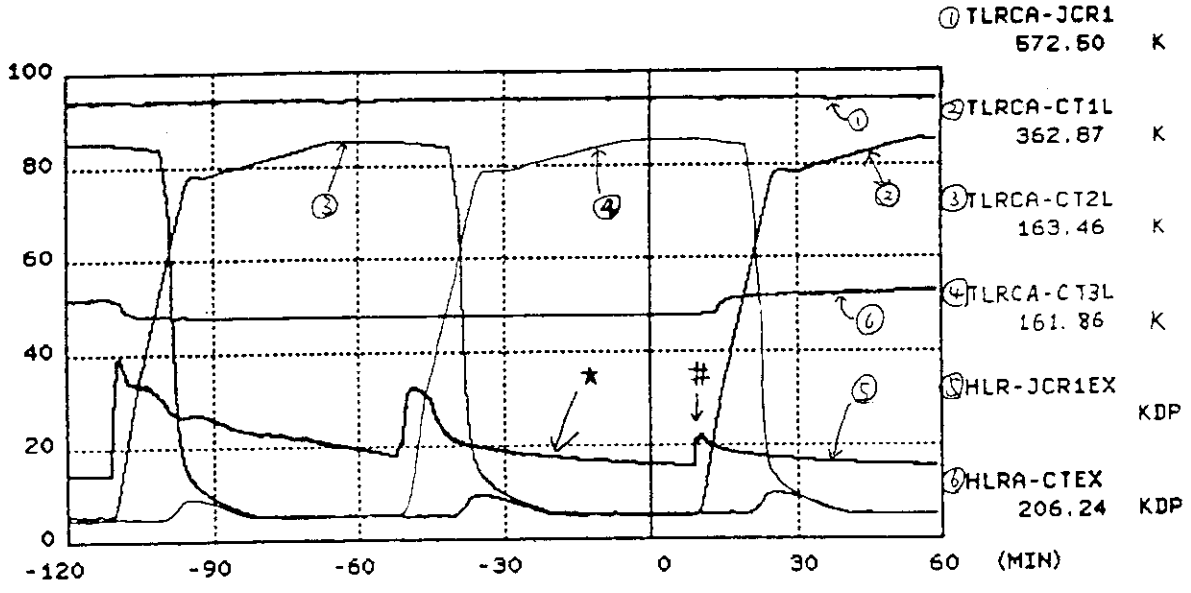

Fig. 4 A typical data trend of cyclic operation obtained during the JFCU cold trap compornent test carried out in Sep. 1990. The trend marked with '*' is the one of the humidity at the exit of the cold trap. The peak marked with '#' shows that sieve bed has much less spike than the others (without a molecular sieve).

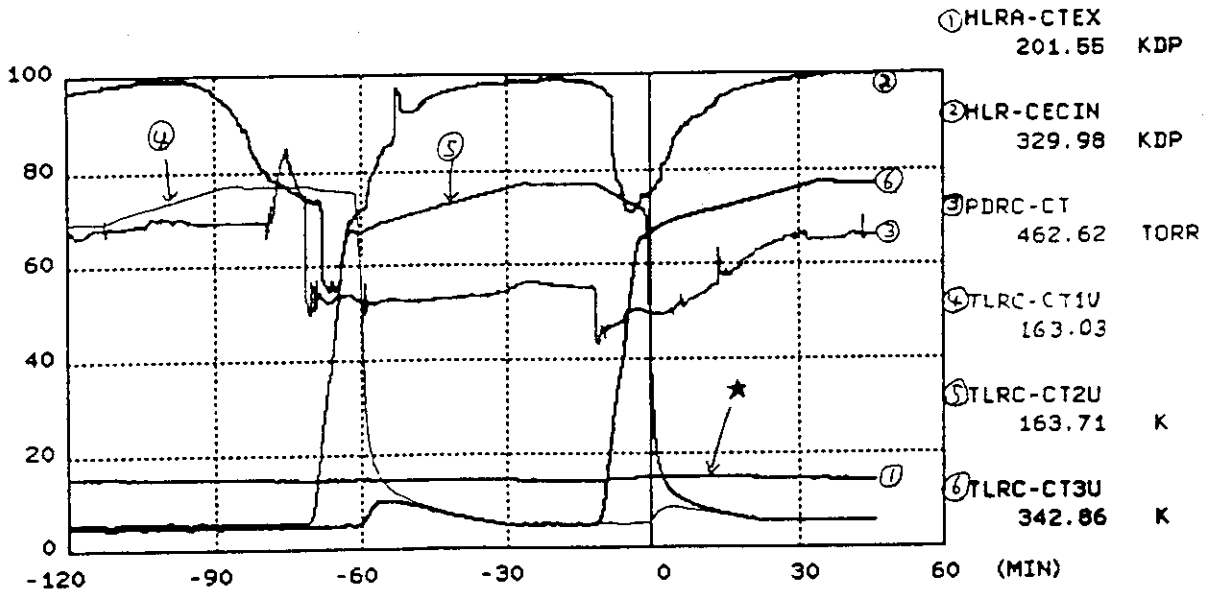

Fig. 5 A typical datatrend of cyclic operation obtained during the JFCU loop run carried out in December 1990. The trend marked with '*' is the one of the humidity at the exit of the cold trap.

NOTE:

TLRCA-CT**:	temperature of cold trap
TLRCA-JCR1:	temperature of catalytic reactor JCR1
HLR-JCR1EX:	humidity at outlet of JCR1
HLRA-CTEX :	humidity at outlet of cold trap
HLRA-CECIN:	humidity at inlet of CEC
PDRC-CT :	pressure difference between inlet and outlet of cold trap

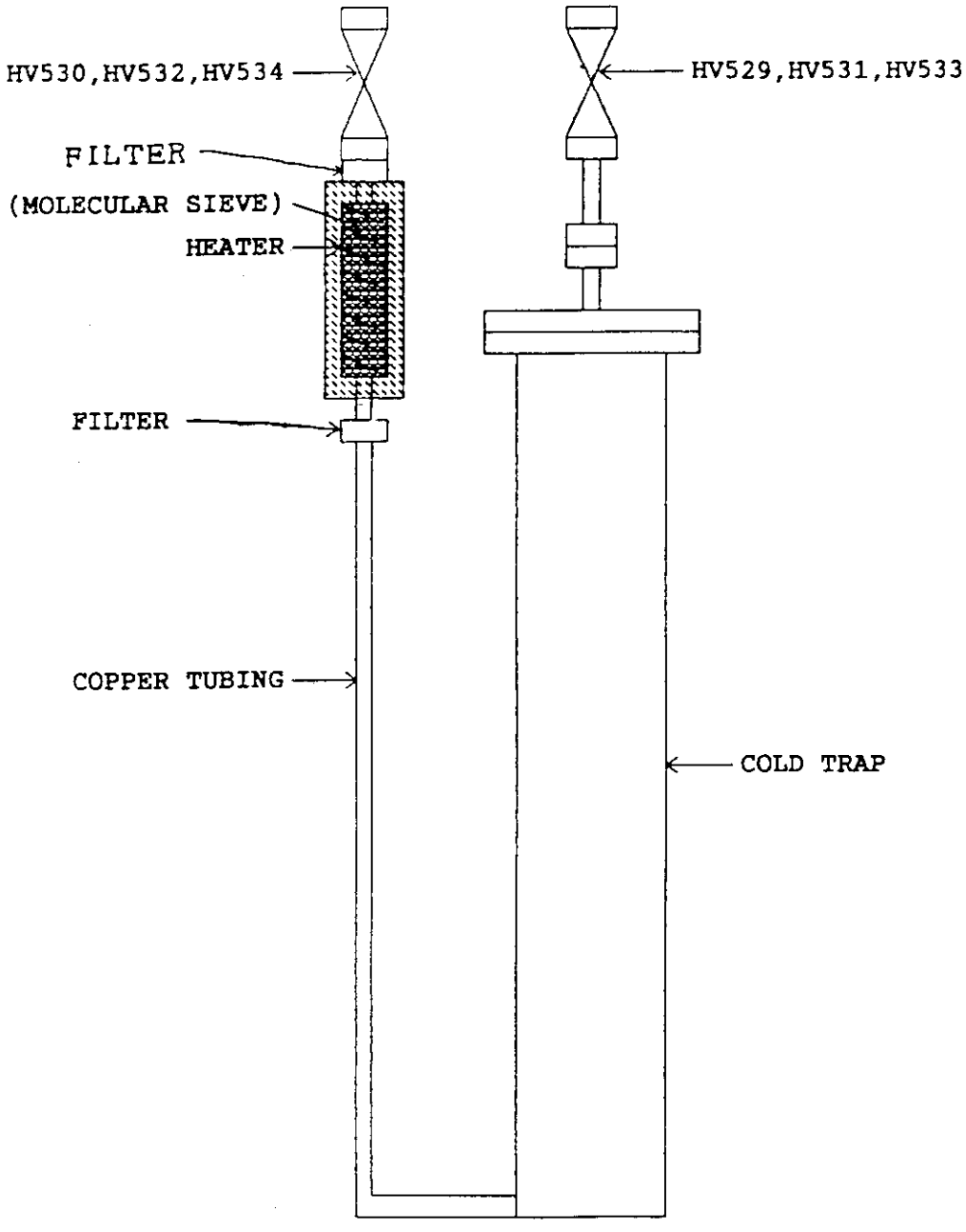

Fig. 6 Configuration of the cold trap with a molecular sieve bed.

Ⅳ. Conclusion

The cold traps in the JAERI Fuel Cleanup System(JFCU) system required to separate tritiated water from gas stream in the plasma exhaust process. The results of the test suggest that its function in steady state is satisfactory, although the function in the first minutes after switching was poor. The cause of this phenomenon was not understood in the test.

Since the cold traps has a function to prevent tritiated water lost from the JFCU to the Tritium Waste Treatment System (TWT), the JFCU subsystem is required to be modified to improve this function until the problem on the cold traps will be solved. The addition of the small molecular sieve beds was effective.

Appendix Detailed test procedure for component test of JFCU cold traps

1. Preparations

1.1 Verify the availability of high pressure N2 for air valves, He, O2, H2 and LN2 for Freon refrigerator.

Adjust the following regulators to 0.5 kg/cm G (7.1 PSIG).
(check)
( ) He gas regulator RV-901
( ) O2 gas regulator RV-902
( ) H2 gas regulator RV-903

1.2 Verify that the temporary vacuum pump is connected to the PEV header and ready.

1.3 Turn "ON" the main power switches for the JFCU in the equipment room #5513. (These switches must be operated by a duty operator)

1.4 Turn "ON" the following main power breakers in the electric panel.
(check)
( ) NFB-I (Uninterruptable 120 V)
( ) NFB-2,3,4,5 (Uninterruptable 100 V: transformer)
( ) NFB-6 (EG 480 V)
( ) NFB-7 (EG 200 V: transformer)

1.5 Turn "ON" the following local electric circuit breakers and switches in the control, CPU, CAMAC and instrument panels.

(check)
( ) SW31 (100 V: controllers)
( ) SW51 (100 V: instruments)
( ) SrhT61 (100 V: CPU)
( ) SW71,72 (100 V: CAMAC and monitoring station)
( ) NFB-2~ (200 V: Freon refrigerator)
( ) NFB-20 (200 V: main switch)
( ) NFB-10 (100 V: light)
( ) NFB-23 (200 V: metal bellows pump)
( ) ELB-20 (200 V: Freon refrigerator pump)
( ) ELB-02 (200 V: catalytic reactor (I) heater)
( ) ELB-9,11,13 (200 V: cold trap upper heater)
( ) ELB-10,12,14 (200 V: cold trap lower heater)
( ) ELB-24 (100 V: c. t. entrance piping heater)

1.6 Check the valves according to Table 1; then start evacuation with the vacuum pump.

1.7 Set the Freon refrigerator as follows.
(check)
( ) Set the temperature of the controller (TLC-REF) on the Freon refrigerator control panel (REFP) at -115 C.
( ) Push the button "LOCAL" on REFP.
( ) Open the by-pass valve HCV-4 in REFP.
( ) Open HV-4 in REPF to supply liquid nitrogen.
( ) Open AV-7 by using switch SV7 in REFP (lamp'll lights)

1.8 Check and operate the following items on the PC (SETTING) to heat up the catalytic reactor JCRI.
(check)
( ) Check the pattern of temperature control as shown on fig. 1.
( ) H-JCRI (circuit braker) "ON"
( ) TLRCA-JCRI (temp. controller) "RUN"

1.9 Set the following items on the PC (SETTING) display to heat up the cold traps.
(check)
( ) Set the temperature control patterns as shown on fig. 2 & fig. 3.
( ) H-CTIU, CT2U & CT3U (circuit braker) "ON"
( ) H-CTIL, CT2L & CT3L (circuit braker) "ON"
( ) H-CTIIN, CT2IN & CT3IN (circuit braker) "ON"
( ) TLRCA-CTIH, CT2IT & CT3U (temp. controller) "RUN"
( ) TLRCA-CTIL, CT2L & CT3L (temp. controller) "RUN"

1.10 When the catalytic reactor JCRI and cold traps CTI, CT2 & CT3 are heated up to the temperatures shown in table 2, record the temperature indicated on PC.

1.11 Supply He to the system by setting valvews as follows;
(check)
( ) HV-552 (Vacuum exhaust valve CEC-OUT) "CLOSE"
( ) HV-553 (Vacuum exhaust valve PD-OUT) "CLOSE"
( ) HV-554 (Vacuum exhaust valve RT-3A) "CLOSE"
( ) HV-555 (Vacuum exhaust valve CEC-IN) "CLOSE"
( ) HV-OOI (He supply valve) "OPEN"
( ) AV-410 (He dilution valve) "OPEN"
( ) Close AV-410 & HV-OOI when the system pressure reaches about 800 Torr.

2. Operation

After drying the system, the cold traps shall be cooled down and set in the "CYCLIC OPERATION".

2.1 Cool down the cold traps as follows,
(check)
( ) Push the Freon feed "START" button of CTI, CT2 & CT3 Freon feed on the REFP.
( ) Close by-pass valve HCV-2 in REFP.
( ) Confirm the TLC REF temperature is below -80 C (193K).
( ) Turn "ON" the refrigerator (REFP).

When the temperatures of the cold traps (TLRC-CTIU, CT2U & CT3~I, TLRC-CTIL, CT2L & CT3L) go below -110 C (163 K), push the button "REMOTE" on REFP. Record the cold traps temperatures in Table 3.

2.2 Set CT timer on PC as shown in table 4.

2.3 "RESET" & "START" CT CYCLIC OPE on PC

2.4 Set operation mode on PC as follows,
(check)

( )	OPERATION MODE	"UNIT"
( )	CT REGENERATION	"INTERNAL"
( )	DILUTION	"INTERNAL"
( )	PD BLEED CTRL	"PRESSURE"
( )	STAND-BY MODE	"OFF"
( )	NORMAL OPE. MODE	"OFF"
( )	PAUSE	"RESET"

2.5 Set pressures and flow rate on PC as follows,
(check)

( )	PRCA-JFCUEX (JFCU exit pressure)	850 Torr
( )	PDRC-CT (Cold trap pressure difference)	300 Torr
( )	FRC-JCRIBYP Catalytic reactor JCRI by-pass flow rate)	10 Nl/min

2.6 Start metal bellows pump as follows,
(check)
( ) Check that HCV-575 (MBP by-pass valve) is fully open
( ) Turn "ON" MBP on the PC
( ) Close HCV-575 slowly

2.7 Open the following valves to supply gases to the system. The valves must be opened in the following order. The flow rate of each gas must be set according to Table 5 (A) & (B). (A) will be applied to the first run, (B) is to the second.

(check):

( )	HV-901	(He supply valve, temporary)	"OPEN"
( )	HV-907	(valve switching flow)	"OPEN"
( )	HV-908	(valve switching flow)	"OPEN"
( )	HV-OOI	(He supply valve)	"OPEN"
( )	HV-053	(spare port valve of CEC-OUT)	"OPEN"
( )	FIC-KI	(mass flow controller He)	set (A) (B)
( )	HV-904	(O2 supply valve, temporary)	"OPEN"
( )	HV-002	(O2 supply valve)	"OPEN"
( )	AV-411	(O2 supply valve)	"OPEN"
( )	FR-JCRIOX	(mass flow controller O2)	set (A) (B)
( )	HV-003	(H2 supply valve)	"OPEN"
( )	AV-401	(H2 supply valve)	"OPEN"
( )	AV-408	(H2 supply valve)	"OPEN"
( )	FIC-K2	(mass flow controller H2)	set (A) (B)

NOW TEST STARTS!

2.8 Check the humidity indicated at **HLR-JCRIEX.** Confirm it is stabilized at c.a. 280 K.

2.9 Run two cycles (6 hours).

3. Data collection

Test data trend listed in Table 6 shall be collected and recorded.

4. Ending test

4.1 Close the following valves to stop supplying gases to the system. Close the va: in the following order.

(check):

( ) HV-002	(O2 supply valve)	"CLOSE"
( ) AV-411	(O2 supply valve)	"CLOSE"
( ) HV-003	(H2 supply valve)	"CLOSE"
( ) AV-401	(H2 supply valve)	"CLOSE"
( ) AV-408	(H2 supply valve)	"CLOSE"
( ) H~-904	(O2 supply valve, temporary)	"CLOSE"

4.2 Stop the metal bellows pump as follows:

(check)

( ) HCV-575 (MBP by-pass valve)	"OPEN"
( ) Turn "OFF" MBP on the PC.	

4.3 Dry out cold traps as follows~

(check)

( ) CT CYCLE OPE. (on PC, COMPONENT)	"STOP"
( ) CT FREON FEED (on PC, COMPONENT)	"STOP"
( ) REF (on PC, COMPONENT)	"OFF"
!!, **leave refrigerator running overnight during the test**	
( ) AV-410	"CLOSE"
( ) AV-409	"OPEN"
( ) AV-420, 421, 424, 425, 428, 429	"OPEN"
( ) Set FRC-CECIN	10 Nl/min
( ) H-CTIU, CT2U & CT3U (circuit braker)	"ON"
( ) H-CTIL, CT2L & CT3L (circuit braker)	"ON"
( ) H-CTIIN, CT2IN & CT3IN (circuit braker)	"ON"
( ) TLRCA-CTIU, CT2U & CT3U (temp. controller)	"RUN"
( ) TLRCA-CTIL, CT2L & CT3L (temp. controller)	"RUN"

4.4 When HLR-CECIN (hygrometer an the exit of CEC) indicates the completion on regeneration, shut down the system as follows:

(check)

( ) H-JCRI (on PC, JCRI circuit braker)	"OFF"
( ) TLRCA-JCRI (temp. controller)	"STOP"
( ) H-CTIU, CT2U & CT3U (circuit braker)	"OFF"
( ) H-CTIL, CT2L & CT3L (circuit braker)	"OFF"
( ) H-CTIIN, CT2IN & CT3IN (circuit braker)	"OFF"
( ) TLRCA-CTIU, CT2U & CT3U (temp. controller)	"STOP"
( ) TLRCA-CTIL, CT2L & CT3L (temp. controller)	"STOP"
( ) HV-OOI (He supply valve)	"CLOSE"
( ) HV-053 (spare port valve of CEC-OUT)	"CLOSE"
( ) HV-907 (valve switching flow)	"CLOSE"

( ) HV-908 (valve switching flow)		"CLOSE"
( ) FREON REFRIGERATOR	set	"LOCAL"
( ) HV-4 (LN2 supply valve in REFP)		"CLOSE"
( ) HCV-2 (by-pass valve in REFP)		"OPEN"

( ) Log-off the computer system

Turn "OFF" the following local electric circuit breakers and switches in the control, CPU, CAMAC and instruments panel.

(check)

( ) SW31	(100 V: controllers)
( ) SW51	(100 V: instruments)
( ) SW61	(100 V: CPU)
( ) SW71,72	(100 V: CAMAC and monitoring station)

When the refrigerator temperature is about room temperature!

( ) NFB-25	(200 V: Freon refrigerator)
( ) NFB-20	(200 V: main switch)
( ) NFB-10	(100 V: light)
( ) NFB-23	(200 V: metal bellows pump)
( ) ELB-20	(200 V: Freon refrigerator pump)
( ) ELB-02	(200 V: catalytic reactor (I) heater)
( ) ELB-9,11,13	(200 V: cold trap upper heater)
( ) ELB-10,12,14	(200 V: cold trap lower heater)
( ) ELB-24	(100 V: c. t. entrance piping heater)

Turn"OFF" the following main power breakers in the electric panel.

(check)

( ) NFB-I	(Uninterruptable 120 V)
( ) NFB-2,3,4,5	(Uninterruptable 100 V: transformer)
( ) NFB-6	(EG 480 V)
( ) NFB-7	(EG 200 V: transformer)

THIS PAGE INTENTIONALLY
LEFT BLANK

JCR1 Temperature

(TLRCA-JCR1)

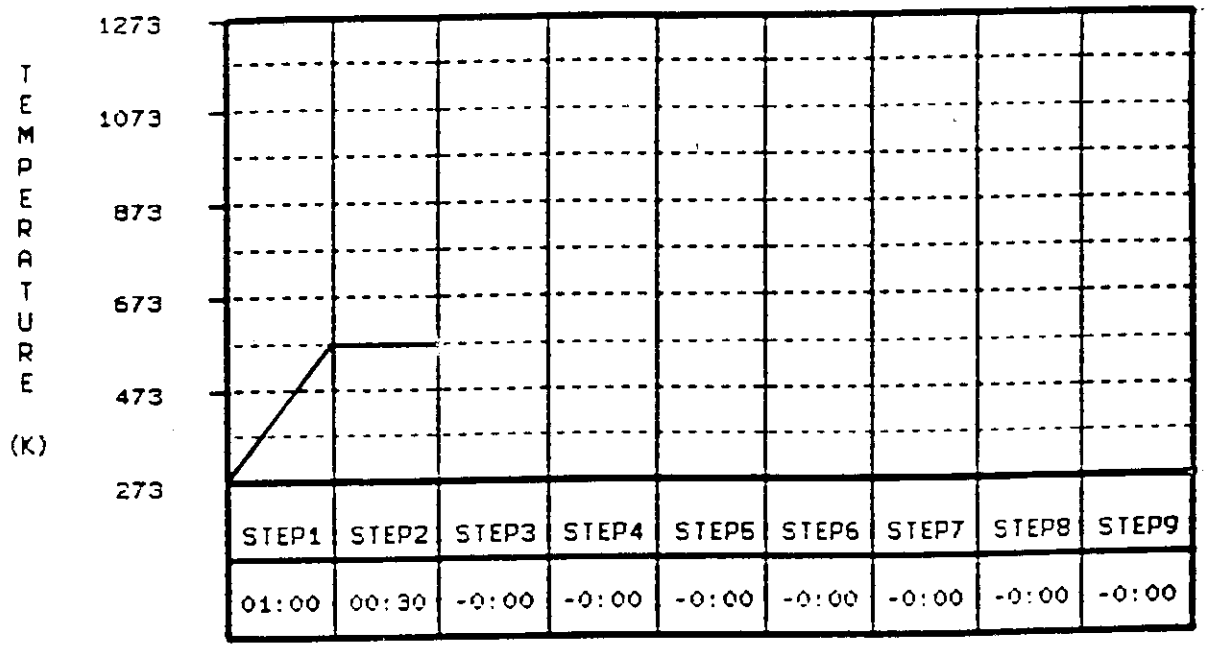

STEP No.	0	1	2	3	4	5	6	7	8	9
SET TEMP (K)	273.0	573.0		573.0		0.000		0.000		0.000
SET TIME (Hr)		01:00	00:30	-0:00	-0:00	-0:00	-0:00	-0:00	-0:00	-0:00

Figure 1

CT1, CT2, CT3 Upper Part Temperature
(TLRC-CT1U, CT2U, CT3U)

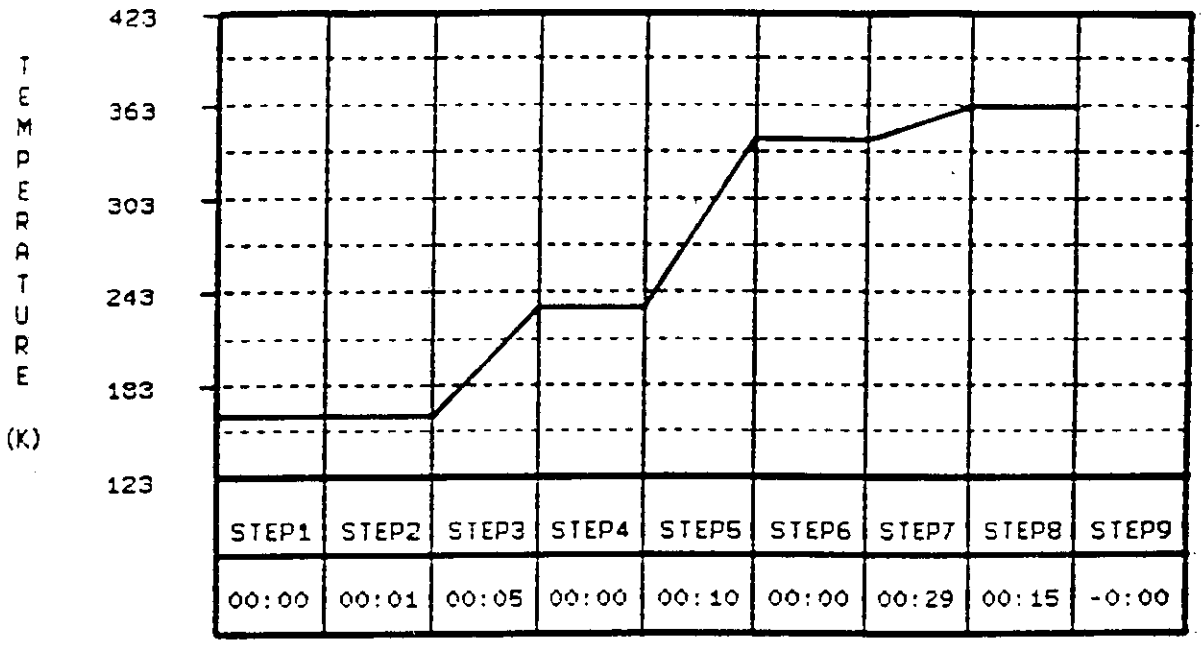

STEP No.	0	1	2	3	4	5	6	7	8	9
SET TEMP (K)	163.0	163.0		233.0		343.0		363.0		363.0
SET TIME (Hr)		00:00	00:01	00:05	00:00	00:10	00:00	00:29	00:15	-0:00

Figure 2

CT1, CT2, CT3 Lower Part Temperature
(TLRC-CT1L, CT2L, CT3L)

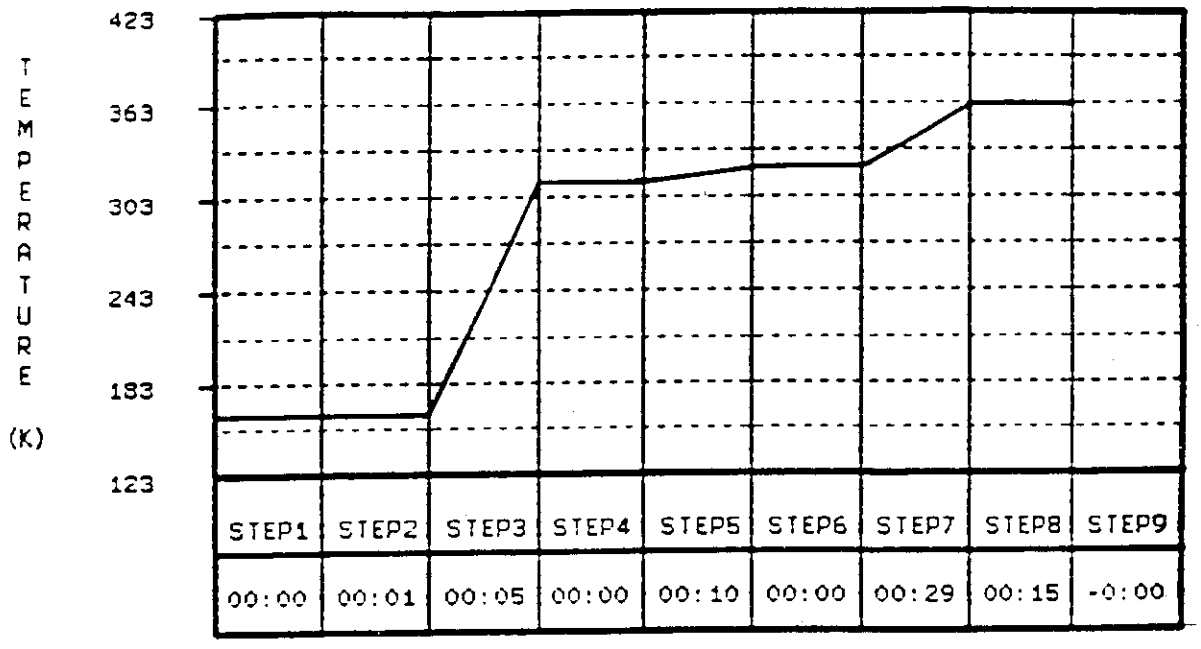

STEP No.	0	1	2	3	4	5	6	7	8	9
SET TEMP (K)	163.0	163.0		313.0		323.0		363.0		363.0
SET TIME (Hr)		00:00	00:01	00:05	00:00	00:10	00:00	00:29	00:15	-0:00

Figure 3

Table 1

CT Test Lineup Valves List (Initial Condition)

[○ : OPEN | × : CLOSE | － : NO TOUCH (DISREGARD)]

VALVE NUMBER	No.3 CONDITION	No.3 CHECK	VALVE NUMBER	No.3 CONDITION	No.3 CHECK	VALVE NUMBER	No.3 CONDITION	No.3 CHECK	VALVE NUMBER	No.3 CONDITION	No.3 CHECK	VALVE NUMBER	No.3 CONDITION	No.3 CHECK	VALVE NUMBER	No.3 CONDITION	No.3 CHECK	VALVE NUMBER	No.3 CONDITION	No.3 CHECK
HV 001	×		HV 044	○		HV 124	○		HV 528	○		HV 558	×		AV 006	－	－	AV 428	○	
HV 002	×		HV 045	○		HV 125	○		HV 529	○		HV 559	×		AV 007	－	－	AV 429	○	
HV 003	×		HV 046	×		HV 501	×		HV 530	○		HV 560	×		AV 401	○		AV 430	○	
HV 004	×		HV 047	×		HV 502	○		HV 531	○		HV 561	×		AV 402	×		AV 431	○	
HV 005	×		HV 048	×		HV 503	×		HV 532	○		HV 562	×		AV 403	×		AV 432	－	－
HV 006	×		HV 049	×		HV 504	×		HV 533	○		HV 563	×		AV 404	×		AV 433	－	－
HV 007	×		HV 050	×		HV 505	×		HV 534	○		HV 564	×		AV 405	×		AV 434	－	－
HV 008	×		HV 051	×		HV 506	○		HV 535	○		HV 565	×		AV 406	×		AV 435	－	－
HV 009	×		HV 052	○		HV 507	×		HV 536	○		HV 566	×		AV 407	×		AV 436	－	－
HV 010	×		HV 053	×		HV 508	×		HV 537	○		HV 567	×		AV 408	○		AV 437	×	
HV 011	×		HV 071	×		HV 509	×		HV 538	○		HV 568	×		AV 409	×		HV 901	×	
HV 012	×		HV 072	×		HV 510	×		HV 539	○		HV 569	×		AV 410	○		HV 902	×	
HV 013	×		HV 073	×		HV 511	○		HV 540	×		HV 570	×		AV 411	○		HV 903	×	
HV 014	×		HV 074	×		HV 512	×		HV 541	×		HV 571	×		AV 412	×		HV 904	×	
HV 015	×		HCV 081	×		HV 513	○		HV 542	×		HV 572	×		AV 413	○		HV 905	×	
HV 016	×		HCV 082	×		HV 514	×		HV 543	○		HCV 573	×		AV 414	×		HV 906	×	
HV 031	×		HV 101	○		HV 515	○		HV 544	×		HCV 574	×		AV 415	×		HV 907	×	
HV 032	×		HV 102	○		HV 516	○		HV 545	×		HCV 575	○		AV 416	×		HV 908	×	
HV 033	×		HV 103	×		HV 517	×		HV 547	×		HCV 576	○		AV 417	×		HV 909	×	
HV 034	×		HV 111	×		HV 518	○		HV 548	×		HV 577	○		AV 418	○		HV 910	○	
HV 035	×		HV 112	×		HV 519	×		HV 549	×		HV 578	○		AV 419	○		HV 911	○	
HV 036	×		HV 113	×		HV 520	×		HV 550	×		HV 461	○		AV 420	○		HV 912	×	
HV 037	×		HV 117	×		HV 521	×		HV 551	×		HV 462	○		AV 421	○		HV 913	○	
HV 038	×		HV 118	×		HV 522	×		HV 552	○		HV 463	○		AV 422	○				
HV 039	×		HV 119	×		HV 523	×		HV 553	○		AV 001	－	－	AV 423	○				
HV 040	×		HV 120	×		HV 524	×		HV 554	○		AV 002	－	－	AV 424	○				
HV 041	×		HV 121	○		HV 525	○		HV 555	○		AV 003	－	－	AV 425	○				
HV 042	×		HV 122	○		HV 526	○		HV 556	×		AV 004	－	－	AV 426	○				
HV 043	×		HV 123	×		HV 527	○		HV 557	×		AV 005	－	－	AV 427	○				

Table 2

Instrument #	set point	data	remark
TLRCA-JCR1	773 K	K	
TLRC-CT1U	333 K	K	
TLRC-CT2U	333 K	K	
TLRC-CT3U	333 K	K	
TLRC-CT1L	333 K	K	
TLRC-CT2L	333 K	K	
TLRC-CT3L	333 K	K	
TR-CT1IN	-	K	
TR-CT2IN	-	K	
TR-CT3IN	-	K	

Table 3

Instrument #	data	remark
TLRC-CT1U	K	
TLRC-CT2U	K	
TLRC-CT3U	K	
TLRC-CT1L	K	
TLRC-CT2L	K	
TLRC-CT3L	K	

Table 4

CT TIMER		TIME	CT TIMER		TIME
Each Cycle Period TM01		60 min	AV-CTEX (R)	OFF-DLY TM08	3 min
AV-CTIN	OFF-DLY TM02	2 min		ON -DLY TM09	4 min
	ON -DLY TM03	0 min	MV	ON -DLY TM10	20 min
AV-CTEX	OFF-DLY TM04	2 min	FREON FEED	OFF-DLY TM11	2 min
	ON -DLY TM05	1 min		ON -DLY TM12	11 min
AV-CTIN (R)	OFF-DLY TM06	3 min			
	ON -DLY TM07	4 min			

Table 5A

Instrument	Flow rate (indicated/true)	Data
FR-D_2SUP FIC-K2 (temporary)	350/300 Ncc/min	
FIC-K1	FULL OPEN	
FR-JCR10X	200/200 Ncc/min	
FRC-JCR1BYP	10.9/10 Nl/min	

Table 5B

Instrument	Flow rate (indicated/true)	Data
FR-D_2SUP FIC-K2 (temporary)	350/300 Ncc/min	
FIC-K1	FULL OPEN	
FR-JCR10X	200/200 Ncc/min	
FRC-JCR1BYP	15.2/14 Nl/min	

Table 6

Instrument No:	Unit	Data	Remarks
PR-JCR1IN	Torr		
PRCA-JFCUEX	Torr		
PdRC-CT	Torr		
FRC-JCR1BYP	Ncc/min		
FRC-CECIN	Nl/min		
FR-TWTINL	Nl/min		
FR-JCR1OX	Nl/min		
TR-CT1IN	K		
TRC-CT1U	K		
TRCA-CT1L	K		
TR-CT2IN	K		
TRC-CT2U	K		
TRCA-CT2L	K		
TR-CT3IN	K		
TRC-CT3U	K		
TRCA-CT3L	K		
HLR-JCR1IN	KDP		
HLR-JCR1EX	KDP		
HLR-CTEX	KDP		
HLR-CECIN	KDP		
ORA-JCR1EX	%		