JAERI-Tech
94-033

CRITICAL ELEMENT DEVELOPMENT OF STANDARD COMPONENTS FOR PIPE WELDING/CUTTING BY CO_2 LASER

November 1994

Kiyoshi OKA, Satoshi KAKUDATE, Masataka NAKAHIRA
Eisuke TADA, Kenjiro OBARA, Naokazu KANAMORI
Kou TAGUCHI, Mitsunori KONDOH, Kiyoshi SHIBANUMA
and Masahiro SEKI

日本原子力研究所
Japan Atomic Energy Research Institute

本レポートは，日本原子力研究所が不定期に公刊している研究報告書です。
入手の問合わせは，日本原子力研究所技術情報部情報資料課（〒319-11 茨城県那珂郡東海村）あて，お申し越しください。なお，このほかに財団法人原子力弘済会資料センター（〒319-11 茨城県那珂郡東海村日本原子力研究所内）で複写による実費頒布をおこなっております。

This report is issued irregularly.
Inquiries about availability of the reports should be addressed to Information Division, Department of Technical Information, Japan Atomic Energy Research Institute, Tokai-mura, Naka-gun, Ibaraki-ken 319-11, Japan.

編集兼発行　日本原子力研究所
印　　刷　㈱高野高速印刷

Critical Element Development of Standard Components for Pipe Welding/cutting by CO_2 Laser

Kiyoshi OKA, Satoshi KAKUDATE, Masataka NAKAHIRA, Eisuke TADA
Kenjiro OBARA, Naokazu KANAMORI, Kou TAGUCHI, Mitsunori KONDOH+
Kiyoshi SHIBANUMA+ and Masahiro SEKI

Department of Fusion Engineering Research
Naka Fusion Research Establishment
Japan Atomic Energy Research Institute
Naka-machi, Naka-gun, Ibaraki-ken

(Received October 27, 1994)

In D-T burning reactors such as International Thermonuclear Experimental Reactor(ITER), an internal access is inevitable for welding/cutting of cooling pipes of in-vessel components, because of spatial constraint due to a narrow port opening space.

An internal-access pipe welding/cutting equipment is being developed in JAERI. Internal access is to approach through inside a pipe to a welding/cutting position, to use 10kW CO_2 laser beam, and to be applicable to both welding and cutting with using a same processing head. A welding/cutting processing head with 10kW CO_2 laser beam has been fabricated and the basic feasibility has been successfully demonstrated for studies of the internal-access pipe welding/cutting concept using 100—A stainless steel pipe with a thickness of 6.3mm. In this study, the optimum focal point of laser beam, laser power and traveling speed of the head have been investigated together with an adjusting mechanism of a relative distance between the head and the pipe wall. In addition, the radiation resistance of critical elements such as optical lens has been investigated.

Keywords : Fusion Experimental Reactor, Internal-access Pipe, Welding/cutting Equipment, CO_2 Laser, Lens Type Processing Head, Mirror Type Processing Head

+ Department of ITER Project

CO_2レーザを用いた配管の溶接・切断装置に関する要素開発

日本原子力研究所那珂研究所核融合工学部
岡　　潔・角舘　聡・中平　昌隆・多田　栄介
小原建治郎・金森　直和・田口　浩・近藤　光昇[+]
柴沼　清[+]・関　昌弘

（1994年10月27日受理）

核融合実験炉において，炉内機器を交換・保守する際，それらに付属する冷却配管をあらかじめ切断し，撤去を行い，その後，新しい炉内機器を設置し，冷却配管を再溶接する作業が必要である。これら一連の作業は，遮蔽領域の確保と狭小なポートからのアクセスという観点から，新しい作業概念の適用が要求されている。

本報告では，従来までの一般的な手法であった配管の外側からのアクセスによる溶接・切断装置によらず，配管内からのアクセスによる溶接・切断を，CO_2レーザを用いることによって可能となったシステムを提案し，要素開発を行った。まず，溶接・切断用加工ヘッドを製作し，基本パラメータの取得を行い，加えて，ガンマ線環境下でのレーザ伝送実験を行い，有効なデータベースを構築した。さらに本システムの有効性を，炉内機器の一つであるダイバータに付属する冷却配管の溶接・切断に適用することで実証した。

那珂研究所：〒311-01　茨城県那珂郡那珂町向山801-1
＋　ＩＴＥＲ開発室

Contents

目　　次

1. INTRODUCTION

The engineering design of the International Thermonuclear Experimental Reactor (ITER)[1] are underway as joint effort of EC, Japan, USA, and RF. The development of the remote maintenance technology is essential for ITER, because the reactor components are activated by 14-MeV neutrons of D-T reaction. Particularly, the in-vessel components, such as divertor plates, armor tiles of the first wall and blanket modules, are the most critical elements in terms of maintenance of the reactor. AS the divertor is expected to require scheduled maintenance typically once a year, reliable and quick maintenance operations are highly needed. **Figure 1** shows a scheme of the divertor maintenance proposed for ITER. After cutting the cooling pipes, the divertor is removed through the horizontal port using an in-vessel manipulator and transporter.

The cooling pipes are connected to the divertor plate through a narrow port space located between TF coils, so that the external space of the pipes is not sufficient to allow an access of an ordinary TIG welder or mechanical cutter. JAERI has started to develop a new maintenance technology for the cooling pipe welding/cutting based on a CO_2 laser beam. Features of this system are as follows [2,3] :

(1) The cooling pipes are cut/welded from the inner surface from a view point of spatial constraint for welding/cutting.

(2) Welding and cutting operations are carried out using a common head and the laser power is adjustable to be optimized for both welding and cutting.

In this paper, the following results are described:

1) The design concept of the internal-access pipe welding/cutting system.
2) The results of the feasibility tests using the two types of welding/cutting processing heads.
3) The radiation resistance of critical elements such as optical lens under high gamma-ray irradiation conditions.

2. DESIGN CONCEPT OF A PROCESSING HEAD

According to the conceptual design of divertor plate layout in the ITER, the laser beam is required to run roughly 100m in order to reach to the welding/cutting position. Since the laser is normally spreaded by 0.002 radian/m, several collimators composed of concave and convex mirrors are installed so as to adjust the laser beam diameter constantly below 40mm along 100m length within the 100-A pipe.

In general, two types of optical focusing mechanism are applicable to the CO_2 laser processing head. One is lens type head that allows the wide range of adjustable focal point but

1. INTRODUCTION

The engineering design of the International Thermonuclear Experimental Reactor (ITER)[1] are underway as joint effort of EC, Japan, USA, and RF. The development of the remote maintenance technology is essential for ITER, because the reactor components are activated by 14-MeV neutrons of D-T reaction. Particularly, the in-vessel components, such as divertor plates, armor tiles of the first wall and blanket modules, are the most critical elements in terms of maintenance of the reactor. AS the divertor is expected to require scheduled maintenance typically once a year, reliable and quick maintenance operations are highly needed. **Figure 1** shows a scheme of the divertor maintenance proposed for ITER. After cutting the cooling pipes, the divertor is removed through the horizontal port using an in-vessel manipulator and transporter.

The cooling pipes are connected to the divertor plate through a narrow port space located between TF coils, so that the external space of the pipes is not sufficient to allow an access of an ordinary TIG welder or mechanical cutter. JAERI has started to develop a new maintenance technology for the cooling pipe welding/cutting based on a CO_2 laser beam. Features of this system are as follows [2,3] :

(1) The cooling pipes are cut/welded from the inner surface from a view point of spatial constraint for welding/cutting.

(2) Welding and cutting operations are carried out using a common head and the laser power is adjustable to be optimized for both welding and cutting.

In this paper, the following results are described:

1) The design concept of the internal-access pipe welding/cutting system.
2) The results of the feasibility tests using the two types of welding/cutting processing heads.
3) The radiation resistance of critical elements such as optical lens under high gamma-ray irradiation conditions.

2. DESIGN CONCEPT OF A PROCESSING HEAD

According to the conceptual design of divertor plate layout in the ITER, the laser beam is required to run roughly 100m in order to reach to the welding/cutting position. Since the laser is normally spreaded by 0.002 radian/m, several collimators composed of concave and convex mirrors are installed so as to adjust the laser beam diameter constantly below 40mm along 100m length within the 100-A pipe.

In general, two types of optical focusing mechanism are applicable to the CO_2 laser processing head. One is lens type head that allows the wide range of adjustable focal point but

requires low power density operation. The other is parabolic mirror type head compatible with high power density operation but fine adjustment of focal point is necessary. These processing heads with rotating mechanism have been fabricated in order to investigate their applicability to the internal access pipe welding/cutting heads. The common parameters and configuration of the welding/cutting heads are as follows:

(1) A maximum laser power is about 10 kW and the beam diameter at the laser source is specified to be 40 mm for cutting/welding the 100-A pipe.

(2) A condensing lens and mirrors are cooled by water so as to decrease the optical transmission loss.

(3) Assist gases for welding and cutting are tentatively selected to be helium and oxygen respectively, and they are blown against the inner wall of the pipe through a nozzle tip of the head.

(4) A dross cover made of aluminum fiber is attached to the external surface of the pipe at the cutting position in order to protect the beam penetration and to collect the dross.

The schematic of internal access pipe welding/cutting head is shown in **Fig.2**.

3. LENS TYPE PROCESSING HEAD

3-1. Constitution of Lens Type Processing Head

Constitution of the lens type processing head is shown in **Fig.3** and major features are described below.

(1) The laser beam focal point can be widely adjusted by changing the relative distance between the condensing lens and the bending mirror.

(2) An assist gas region is confined between a lens and processing point, resulting in high quality of welding and cutting.

(3) The condensing lens is made of ZnSe with a diameter of ϕ40mm. The focal point is 254mm.

(4) The bending mirror is made of oxygen free copper with a diameter of ϕ40mm and a thickness of 10mm .

(5) The cooling water for lens and mirror is connected in series so as to satisfy the compact space requirement.

(6) The clamp cylinder with pneumatic actuators is installed between the pipe and the guide cylinder of the rotating head in order to fix them at the welding and cutting operations.

(7) The guide roller is installed in the front end of the head for profiling of the inner wall of the pipe to be cut and welded.

requires low power density operation. The other is parabolic mirror type head compatible with high power density operation but fine adjustment of focal point is necessary. These processing heads with rotating mechanism have been fabricated in order to investigate their applicability to the internal access pipe welding/cutting heads. The common parameters and configuration of the welding/cutting heads are as follows:

(1) A maximum laser power is about 10 kW and the beam diameter at the laser source is specified to be 40 mm for cutting/welding the 100-A pipe.

(2) A condensing lens and mirrors are cooled by water so as to decrease the optical transmission loss.

(3) Assist gases for welding and cutting are tentatively selected to be helium and oxygen respectively, and they are blown against the inner wall of the pipe through a nozzle tip of the head.

(4) A dross cover made of aluminum fiber is attached to the external surface of the pipe at the cutting position in order to protect the beam penetration and to collect the dross.

The schematic of internal access pipe welding/cutting head is shown in **Fig.2**.

3. LENS TYPE PROCESSING HEAD

3-1. Constitution of Lens Type Processing Head

Constitution of the lens type processing head is shown in **Fig.3** and major features are described below.

(1) The laser beam focal point can be widely adjusted by changing the relative distance between the condensing lens and the bending mirror.

(2) An assist gas region is confined between a lens and processing point, resulting in high quality of welding and cutting.

(3) The condensing lens is made of ZnSe with a diameter of ϕ40mm. The focal point is 254mm.

(4) The bending mirror is made of oxygen free copper with a diameter of ϕ40mm and a thickness of 10mm .

(5) The cooling water for lens and mirror is connected in series so as to satisfy the compact space requirement.

(6) The clamp cylinder with pneumatic actuators is installed between the pipe and the guide cylinder of the rotating head in order to fix them at the welding and cutting operations.

(7) The guide roller is installed in the front end of the head for profiling of the inner wall of the pipe to be cut and welded.

3-2. Results of Laser Welding/Cutting Test

Welding and cutting experiments have been conducted for the 100-A pipe. It is shown that the rotating center of the head can be precisely adjusted to the center of pipe with an offset of less than 1.5mm by using the clamping mechanism. In addition, the guide roller traces by along the pipe inner wall, proving fine adjustment of the focal points at welding and cutting.

The welding and cutting of the 100-A pipe have been successfully demonstrated and the typical results are shown in **Figs. 4 and 5**. As for welding, the full penetration welding has been made under an optimized condition listed in **Table 1**. The focal point was set at a position of 3mm in depth from the inner surface of the pipe. In the cutting experiments, the laser beam with a constant power of 3kW was sufficient for the 100-A pipe. The focal point was set at the surface of the pipe. Further optimization including the possibility of full laser cutting should be investigated in order to obtain more smooth cutting surface.

Table 1 Obtained optimum conditions for welding/cutting

Operation	Laser power	Traveling Speed	Assist gas	Focal point
Welding	5 kW	0.8 m/min	Helium 100 l/min	3 mm
Cutting	3 kW	1 m/min	Oxygen 100 l/min	0 mm

4. MIRROR TYPE PROCESSING HEAD

4-1. Constitution of Mirror Type Processing Head

The mirror type processing head has a simple focusing mechanism without a condensing lens and an advantage for use in a gamma-ray radiation environment because of the all elements are made of metals. **Figure 6** shows the mirror type processing head developed for this feasibility study. Major features are listed as follows:

(1) The parabolic mirror with 51.5mm of focal point is made of oxygen free copper.

(2) The front end of the head with water jacket is worked to cool the mirror for efficient optical transmission.

(3) The adjustable support with an air actuator is installed between the pipe wall and the guide cylinder wall so as to be adjustable the center of rotating head with an accuracy of less than 0.1mm.

(4) The guide roller on the front end of the head assists the rotation of the mirror with an accuracy of less than 0.5mm along the inner wall of the pipe. The guide roller with

3-2. Results of Laser Welding/Cutting Test

Welding and cutting experiments have been conducted for the 100-A pipe. It is shown that the rotating center of the head can be precisely adjusted to the center of pipe with an offset of less than 1.5mm by using the clamping mechanism. In addition, the guide roller traces by along the pipe inner wall, proving fine adjustment of the focal points at welding and cutting.

The welding and cutting of the 100-A pipe have been successfully demonstrated and the typical results are shown in **Figs. 4 and 5**. As for welding, the full penetration welding has been made under an optimized condition listed in **Table 1**. The focal point was set at a position of 3mm in depth from the inner surface of the pipe. In the cutting experiments, the laser beam with a constant power of 3kW was sufficient for the 100-A pipe. The focal point was set at the surface of the pipe. Further optimization including the possibility of full laser cutting should be investigated in order to obtain more smooth cutting surface.

Table 1 Obtained optimum conditions for welding/cutting

Operation	Laser power	Traveling Speed	Assist gas	Focal point
Welding	5 kW	0.8 m/min	Helium 100 l/min	3 mm
Cutting	3 kW	1 m/min	Oxygen 100 l/min	0 mm

4. MIRROR TYPE PROCESSING HEAD

4-1. Constitution of Mirror Type Processing Head

The mirror type processing head has a simple focusing mechanism without a condensing lens and an advantage for use in a gamma-ray radiation environment because of the all elements are made of metals. **Figure 6** shows the mirror type processing head developed for this feasibility study. Major features are listed as follows:

(1) The parabolic mirror with 51.5mm of focal point is made of oxygen free copper.

(2) The front end of the head with water jacket is worked to cool the mirror for efficient optical transmission.

(3) The adjustable support with an air actuator is installed between the pipe wall and the guide cylinder wall so as to be adjustable the center of rotating head with an accuracy of less than 0.1mm.

(4) The guide roller on the front end of the head assists the rotation of the mirror with an accuracy of less than 0.5mm along the inner wall of the pipe. The guide roller with

spring mechanism provides a maximum stroke of 3mm and contact pressure ranging from 1.8 to 3.6kg.

4-2. Performance Tests on Adjustable Support and Guide Roller

Preliminary experiments have been conducted to investigate an adjusting mechanism composed of adjustable support and guide roller. In this experiment, the displacement between the nozzle tip of the processing head and the inner surface of the pipe were measured by the conditions on and off of the adjusting mechanism.

It is shown that the adjusting mechanism provides precise centering and the measured displacement is within 0.25mm as shown by the solid line of **Fig. 7**. On the other hand, the maximum displacement without the adjusting mechanism is approximately 0.7mm. As a result, the capability of adjusting mechanism composed of guide roller and adjustable support has been successfully demonstrated and the accuracy in centering the rotating head is around +0.13mm.

4-3. Results of Laser Welding/Cutting Test

Welding and cutting experiments have been conducted for the 100-A pipe by using the mirror type processing head with the adjusting mechanism described above. Typical results obtained for welding and cutting are shown in **Figs. 8 and 9** respectively and the corresponding conditions are listed in **Table 2**. In this experiment, the parabolic mirror was cleaned every operation. However, optical reflection efficiency of the mirror after 40 times operations is decreased down to 50% due to back sputtering from the welding/cutting surface.

Table 2 Obtained optimum conditions for welding/cutting

Operation	Laser power	Traveling Speed	Assist gas	Focal point
Welding	4.5 kW	0.8 m/min	Helium 75 l/min	1.5 mm
Cutting	4 kW	1 m/min	Oxygen 50 l/min	0.5 mm

5. IRRADIATION TEST

5-1. Experimental Outline

It is necessary to investigate whether the laser processing is feasible in a gamma-ray irradiation condition. The irradiation dose for the divertor maintenance of ITER is estimated to be 1.0×10^7R/h. The laser source is placed outside an irradiation environment, because the laser beam can be transmitted from a long distance by using collimator and Cu mirrors. The

spring mechanism provides a maximum stroke of 3mm and contact pressure ranging from 1.8 to 3.6kg.

4-2. Performance Tests on Adjustable Support and Guide Roller

Preliminary experiments have been conducted to investigate an adjusting mechanism composed of adjustable support and guide roller. In this experiment, the displacement between the nozzle tip of the processing head and the inner surface of the pipe were measured by the conditions on and off of the adjusting mechanism.

It is shown that the adjusting mechanism provides precise centering and the measured displacement is within 0.25mm as shown by the solid line of **Fig. 7**. On the other hand, the maximum displacement without the adjusting mechanism is approximately 0.7mm. As a result, the capability of adjusting mechanism composed of guide roller and adjustable support has been successfully demonstrated and the accuracy in centering the rotating head is around +0.13mm.

4-3. Results of Laser Welding/Cutting Test

Welding and cutting experiments have been conducted for the 100-A pipe by using the mirror type processing head with the adjusting mechanism described above. Typical results obtained for welding and cutting are shown in **Figs. 8 and 9** respectively and the corresponding conditions are listed in **Table 2**. In this experiment, the parabolic mirror was cleaned every operation. However, optical reflection efficiency of the mirror after 40 times operations is decreased down to 50% due to back sputtering from the welding/cutting surface.

Table 2 Obtained optimum conditions for welding/cutting

Operation	Laser power	Traveling Speed	Assist gas	Focal point
Welding	4.5 kW	0.8 m/min	Helium 75 l/min	1.5 mm
Cutting	4 kW	1 m/min	Oxygen 50 l/min	0.5 mm

5. IRRADIATION TEST

5-1. Experimental Outline

It is necessary to investigate whether the laser processing is feasible in a gamma-ray irradiation condition. The irradiation dose for the divertor maintenance of ITER is estimated to be 1.0×10^7R/h. The laser source is placed outside an irradiation environment, because the laser beam can be transmitted from a long distance by using collimator and Cu mirrors. The

change of transmittance and absorptance of mirror and lens are experimentally studied under the irradiation, and we have investigated whether the cutting and welding operations are available in such condition.

5-2. Experimental Equipment

Figure 10 shows a set-up for gamma-ray irradiation tests. The CO_2 laser source consists of oscillator, power unit and cooling unit. The laser source is installed near the entrance of the test room. The laser transmission system is composed of reflection mirror, concave lens, collimator and condensing lens. The specifications are as follows:

Laser power	: 120W
Reflection mirror	: ϕ54mm diameter, OFC
Concave mirror	: ϕ54mm diameter, radius of curvature is 5m
Collimator	: ZnSe, ϕ1.0×0.120in.
Condensing lens	: ZnSe, focal length is 5 inches

A semiconductor laser is attached at the end of oscillator to confirm the focus of the laser, because the laser beam with wave length of 10.6μm is not visible. The beam splitter is installed at about 800mm ahead of it, and laser is shared at a ratio of 9(reflection) to 1(penetration). The penetrated laser is used to monitor laser power, and the reflected laser is used to measure transmittance and absorptance of ZnSe lens. The laser, which is reflected by the beam splitter, is transmitted to near radiation source(Co-60) about 19m by using 8 Cu mirrors and a Cu lens. In the end the laser passes through condensing lens(focal length is 5 inches) and is reached to the power meter.

The ZnSe lens, which was irradiated beforehand, is used in this experiment. The specifications are 1.5 inches in diameter, 5 inches of focal length with and without an AR coating. ThF_4 of 1μm thickness and ZnSe of 0.2μm thickness were used for the AR coating. The optical characteristics are shown in **Table 3**.

Table 3 Optical characteristics of lens

Coating	Gamma-ray irradiation (R)	Focal length (in.)	Transmittance (%)	Absorptance (%)	Reflectance (%)
none	0	10	69.9	0.04	25.2
	5.0×10^8	10	70.7	0.08	24.2
AR	0	10	99.7	0.14	0.2
	5.0×10^8	10	99.2	0.17	0.3

5-3. Results of Irradiation Test

Table 4 summarizes the result of transmittance. The transmittance of non-coated lens was unchanged from 69% by gamma-ray irradiation. This result clearly shows that a bulk of ZnSe material is not affected by gamma-ray irradiation. The result of the transmittance of the AR coated lens is as following: before gamma-ray irradiation is 97%, during gamma-ray irradiation is 98%, and after gamma-ray irradiation is 99%. We can conclude that the gamma-ray irradiation has no affect on the transmittance of the AR coated lens.

Table 4 Test results of transmittance

Test piece	Transmittance(%)		
	before irradiation	during irradiation	after irradiation
AR coating(new)	99	-	-
AR coating 2.9×10^9R(irradiated)	97	98	99
No coating 2.9×10^9R(irradiated)	69	69	69

The absorptance of ZnSe lens is shown in **Table 5**. The absorptance of the non-coated lens was 0.2% and the AR coated lens was 0.4%. We have seen no affect by gamma-ray irradiation because of no change before and after the test.

Table 5 Test results of absorptance

Test piece	Absorptance(%)	
	before irradiation	during irradiation
AR coating(new)	0.3	-
AR coating 2.9×10^9R(irradiated)	0.4	0.4
No coating 2.9×10^9R(irradiated)	0.2	0.1

Changes in laser power and absorptance of ZnSe lens could explained by the thermal deformation of the lens, which was derived some movement of the focus. Suppose laser is multi-mode, which has energy density of rectangle shape as shown in **Fig.11**.

The focal length F_1 of mirror which is the efforts of thermal lens is expressed as following equation;

$$F_1 = \frac{2\pi k}{B P_L K} r^2$$

here,

$$K = \left\{ \left(\frac{\Delta n}{\Delta T} \right)_{\sigma=0} + (n-1)(1+\upsilon)\alpha \right\} t$$

$\left(\frac{\Delta n}{\Delta T} \right)_{\sigma=0}$: inclined temperature of refractive index without strain

n	: refractive index	(2.4)
υ	: Poisson's ratio	(0.3)
α	: coefficient of linear expansion	(7.57×10^{-6} 1/°C)
k	: thermal conductivity	(0.018 w/mm°C)
B	: absorptance of lens	(0.1~0.3 %)

Therefore, the composite focal length F_2 is expressed by the following equation;

$$F_2 = \frac{F_1 f_1}{F_1 + f_1}$$

f_1 : focal length of lens without thermal deformation

The movement of the focus obtained by the above equations is shown in **Fig.12**. In the case of 1kW power, even if the absorptance is increased, the focus hardly moves, because the thermal deformation is almost negligible. However, in the case of 5kW power and 0.4% absorptance, the movement becomes as much as 1.8mm. The cutting/welding capability are reached the limitation generally. Therefore we obtained the conclusion that mirror type processing head is better in more 10kW power laser system because of no movement of focus.

6. CONCLUSION

Two types of laser processing heads have been fabricated and newly developed internal access pipe welding/cutting concept has been successfully demonstrated for the 100-A pipe. In particular, the adjusting mechanism composed of a guide roller and a pneumatic support is found to give precise centering performance within +0.13mm and stable rotation of the laser processing heads are achieved. The guide roller provides accurate tracing of the inner wall of the pipe for welding and cutting. In addition, the gamma-ray irradiation test was carried out. In this test, the transmission test was carried out in gamma-ray irradiation field. We have obtained that a condensing lens installed a processing head is not affected by gamma-ray

$$F_1 = \frac{2\pi k}{B P_L K} r^2$$

here,

$$K = \left\{ \left(\frac{\Delta n}{\Delta T} \right)_{\sigma=0} + (n-1)(1+\upsilon)\alpha \right\} t$$

$\left(\frac{\Delta n}{\Delta T} \right)_{\sigma=0}$: inclined temperature of refractive index without strain

n	: refractive index	(2.4)
υ	: Poisson's ratio	(0.3)
α	: coefficient of linear expansion	(7.57×10^{-6} 1/°C)
k	: thermal conductivity	(0.018 w/mm°C)
B	: absorptance of lens	(0.1~0.3 %)

Therefore, the composite focal length F_2 is expressed by the following equation;

$$F_2 = \frac{F_1 f_1}{F_1 + f_1}$$

f_1 : focal length of lens without thermal deformation

The movement of the focus obtained by the above equations is shown in **Fig.12**. In the case of 1kW power, even if the absorptance is increased, the focus hardly moves, because the thermal deformation is almost negligible. However, in the case of 5kW power and 0.4% absorptance, the movement becomes as much as 1.8mm. The cutting/welding capability are reached the limitation generally. Therefore we obtained the conclusion that mirror type processing head is better in more 10kW power laser system because of no movement of focus.

6. CONCLUSION

Two types of laser processing heads have been fabricated and newly developed internal access pipe welding/cutting concept has been successfully demonstrated for the 100-A pipe. In particular, the adjusting mechanism composed of a guide roller and a pneumatic support is found to give precise centering performance within +0.13mm and stable rotation of the laser processing heads are achieved. The guide roller provides accurate tracing of the inner wall of the pipe for welding and cutting. In addition, the gamma-ray irradiation test was carried out. In this test, the transmission test was carried out in gamma-ray irradiation field. We have obtained that a condensing lens installed a processing head is not affected by gamma-ray

irradiation. A mirror type processing head is shown to be better in higher power laser system because of no movement of focus.

ACKNOWLEDGMENTS

The authors would like to express their sincere appreciation to Drs. S.Shimamoto and S.Matsuda for their continuous encouragement on this work. The contributions by the staffs of department of ITER project and Toshiba Corp., are gratefully acknowledged.

REFERENCES

[1] K.Tomabechi: Proc. 13th Conf. on Plasma Physics and Controlled Fusion Research, (Washington, 1990), IAEA-CN-53/F-1-1.

[2] K.Shibanuma, T.Honda, K.Satoh, Y.Ohkawa, T.Terakado, et al: Remote Maintenance System Design and Component Development for Fusion Experimental Reactor, Proc.16th Sympo. on Fusion Tech., Vol.2, pp.1317-1321(1990)

[3] K.Honda, Y.Makino, M.Kondoh, K.Shibanuma: Feasibility Study of Internal-Access Pipe Welding/Cutting System for Fusion Experimental Reactor(FER), Proc.LASER'91,(1991)

irradiation. A mirror type processing head is shown to be better in higher power laser system because of no movement of focus.

ACKNOWLEDGMENTS

The authors would like to express their sincere appreciation to Drs. S.Shimamoto and S.Matsuda for their continuous encouragement on this work. The contributions by the staffs of department of ITER project and Toshiba Corp., are gratefully acknowledged.

REFERENCES

[1] K.Tomabechi: Proc. 13th Conf. on Plasma Physics and Controlled Fusion Research, (Washington, 1990), IAEA-CN-53/F-1-1.

[2] K.Shibanuma, T.Honda, K.Satoh, Y.Ohkawa, T.Terakado, et al: Remote Maintenance System Design and Component Development for Fusion Experimental Reactor, Proc.16th Sympo. on Fusion Tech., Vol.2, pp.1317-1321(1990)

[3] K.Honda, Y.Makino, M.Kondoh, K.Shibanuma: Feasibility Study of Internal-Access Pipe Welding/Cutting System for Fusion Experimental Reactor(FER), Proc.LASER'91,(1991)

irradiation. A mirror type processing head is shown to be better in higher power laser system because of no movement of focus.

ACKNOWLEDGMENTS

The authors would like to express their sincere appreciation to Drs. S.Shimamoto and S.Matsuda for their continuous encouragement on this work. The contributions by the staffs of department of ITER project and Toshiba Corp., are gratefully acknowledged.

REFERENCES

[1] K.Tomabechi: Proc. 13th Conf. on Plasma Physics and Controlled Fusion Research, (Washington, 1990), IAEA-CN-53/F-1-1.

[2] K.Shibanuma, T.Honda, K.Satoh, Y.Ohkawa, T.Terakado, et al: Remote Maintenance System Design and Component Development for Fusion Experimental Reactor, Proc.16th Sympo. on Fusion Tech., Vol.2, pp.1317-1321(1990)

[3] K.Honda, Y.Makino, M.Kondoh, K.Shibanuma: Feasibility Study of Internal-Access Pipe Welding/Cutting System for Fusion Experimental Reactor(FER), Proc.LASER'91,(1991)

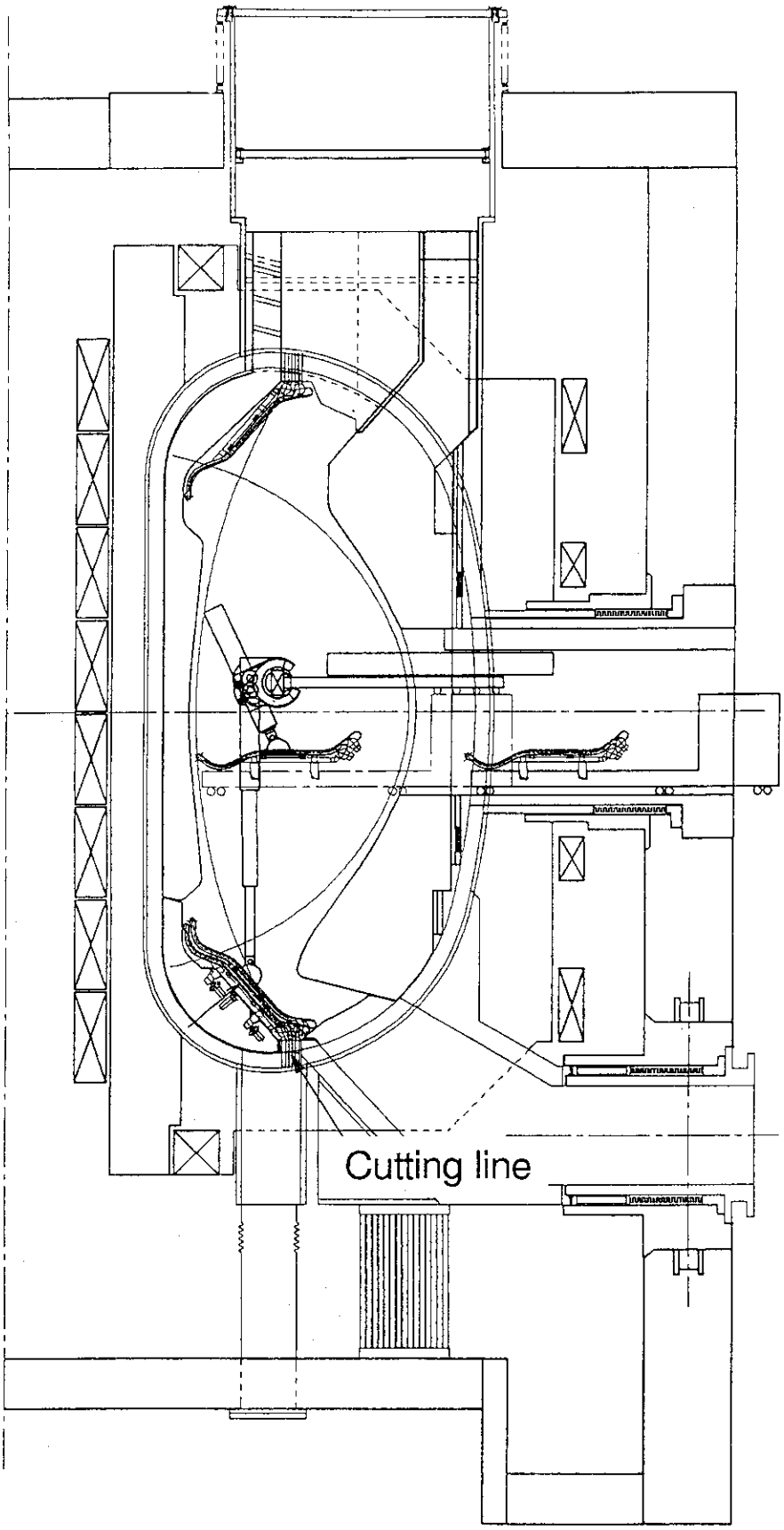

Fig. 1 Schematic of divertor maintenance in ITER

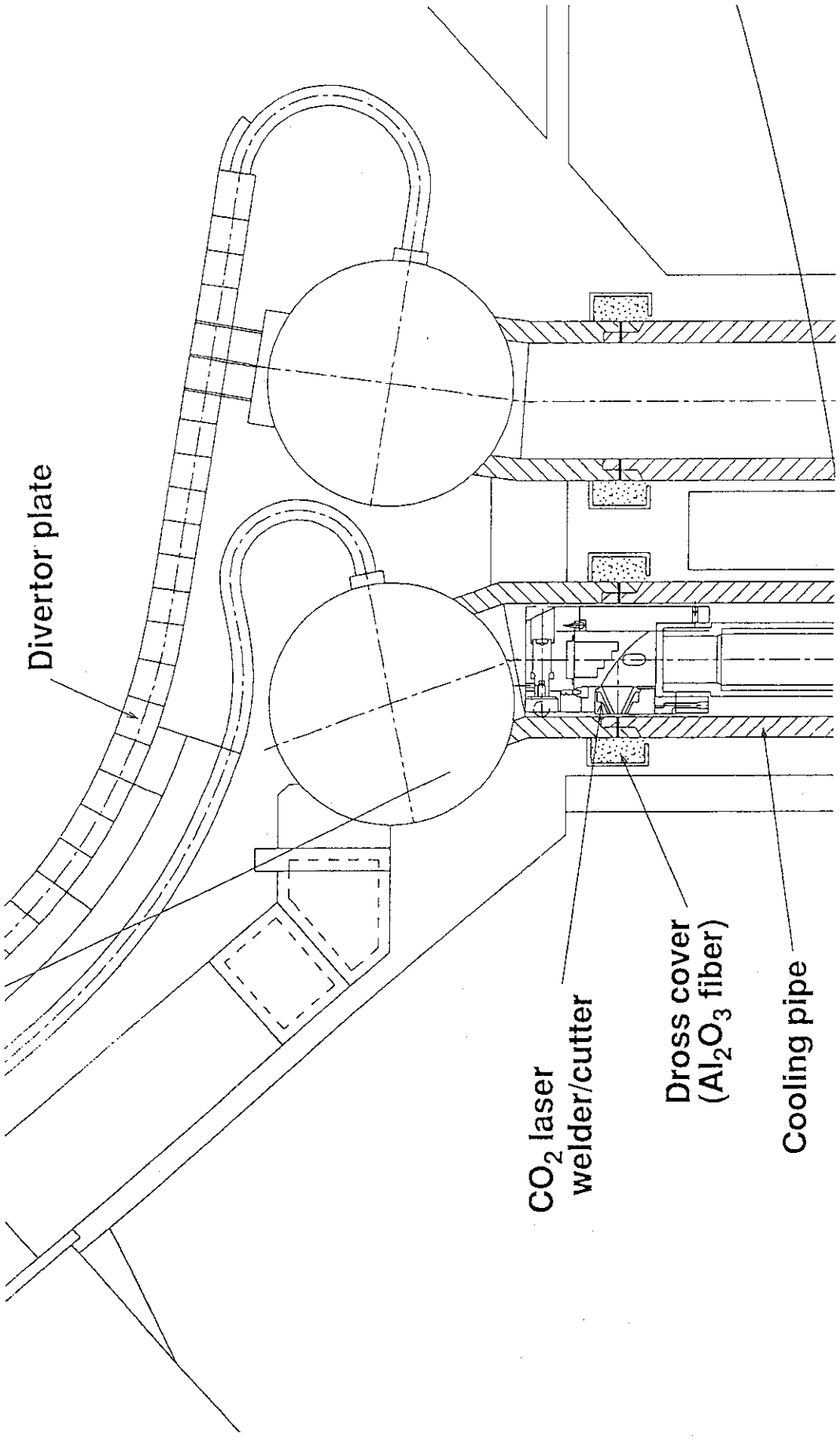

Fig. 2 Schematic drawing of CO_2 laser welder/cutter (Internal access)

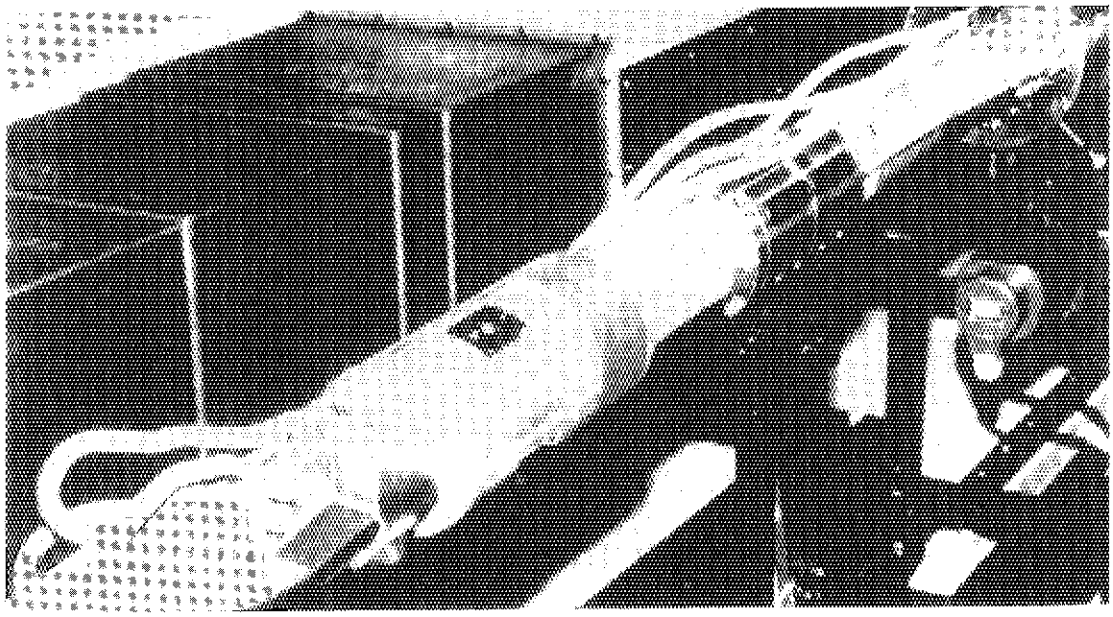

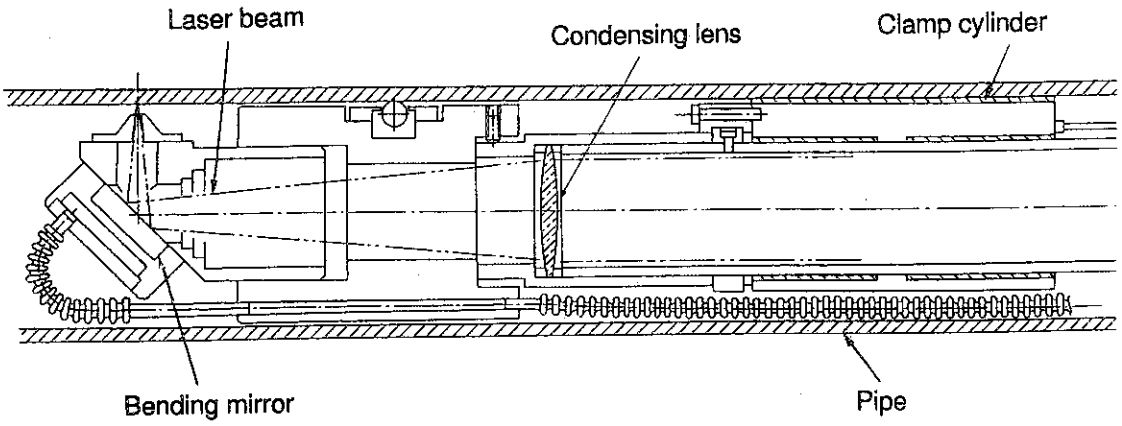

Fig. 3 Lens type processing head

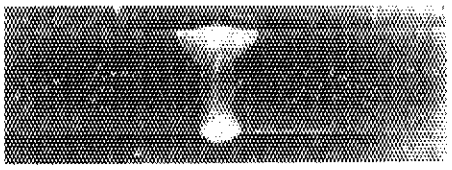

(a) A section of the welding part

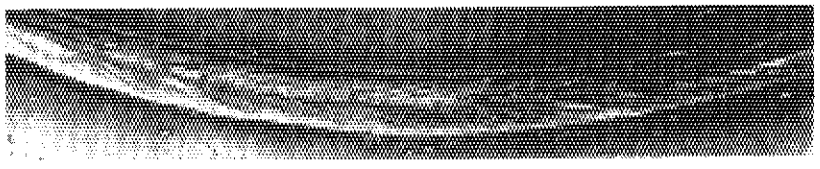

(b) An internal bead

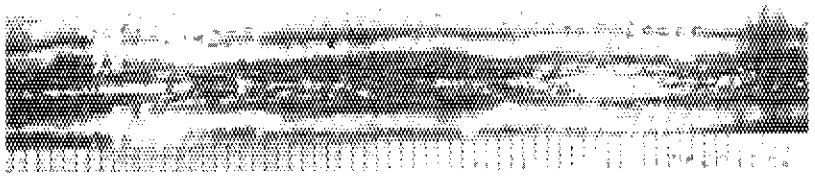

(c) An external bead

Test conditions

Laser power : 5kW
Traveling speed : 800mm/min
Focal point : 3mm (from the internal surface into the pipe thickness)
Assist gas : Helium gas with the velocity of 100l/min.

Fig. 4 Laser welding result of lens type

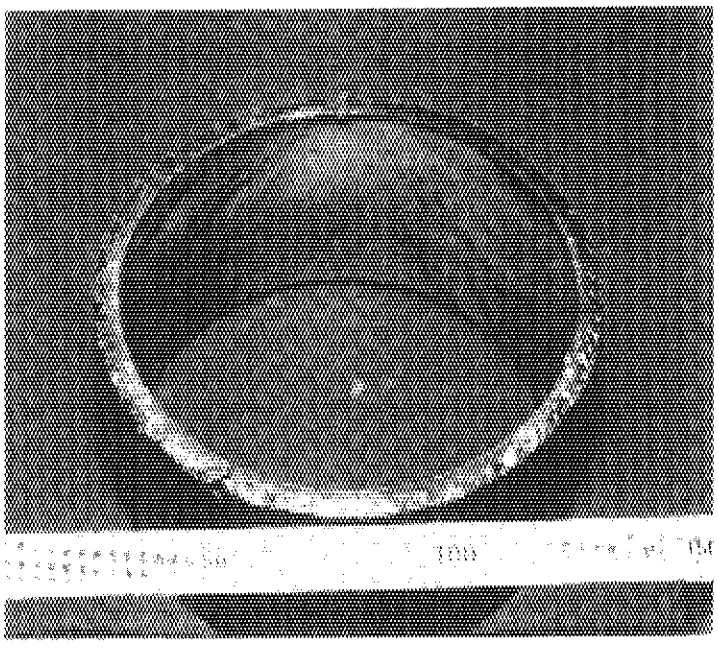

Test conditions

Laser power : 3kW
Traveling speed : 1000mm/min
Focal point : 0mm (from the internal surface into the pipe thickness)
Assist gas : Oxygen gas with the velocity of 100l/min.

Fig. 5 Laser cutting result of lens type

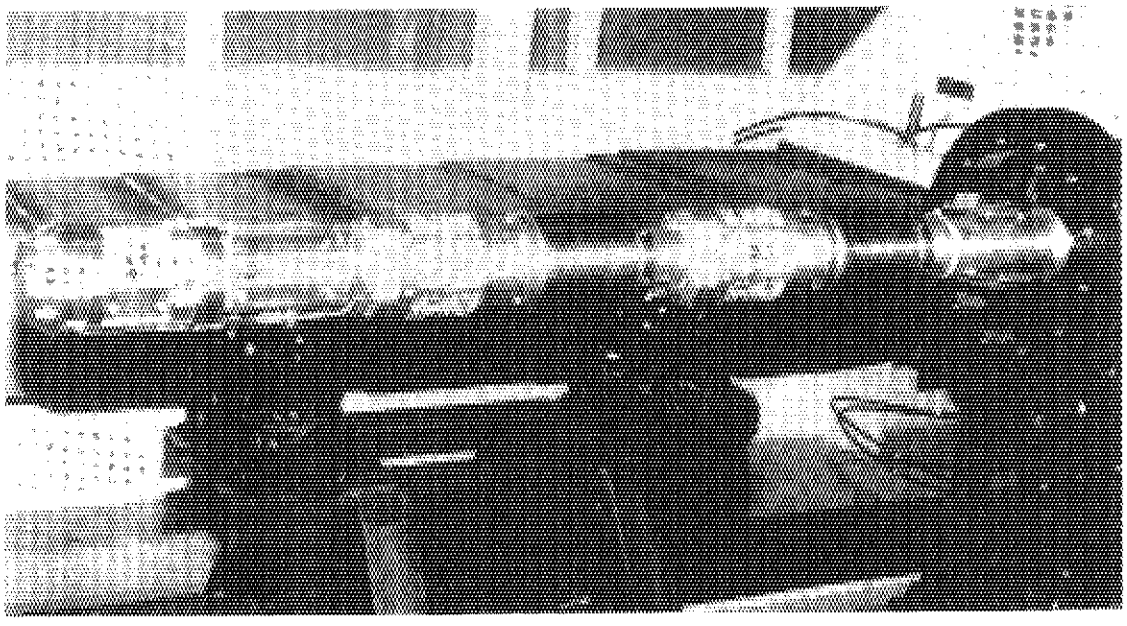

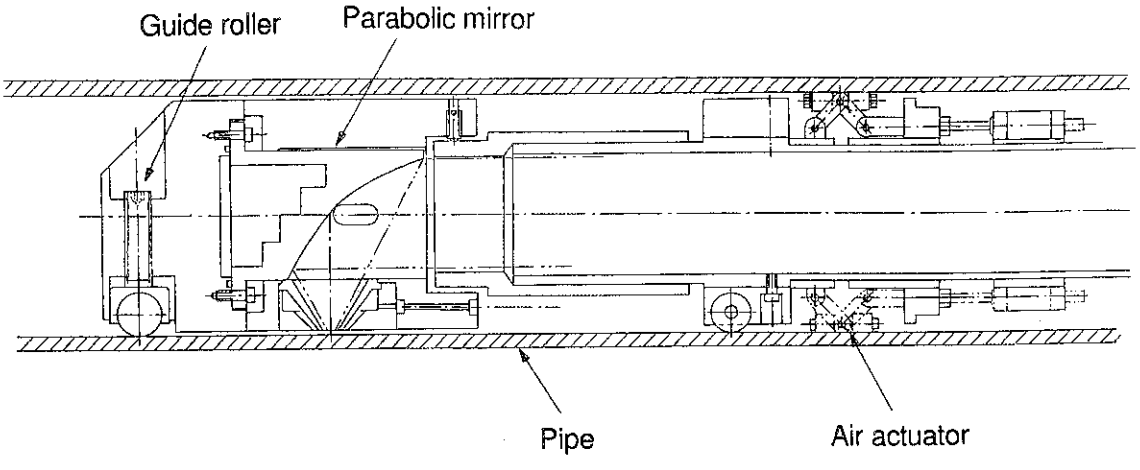

Fig. 6 Mirror type processing head

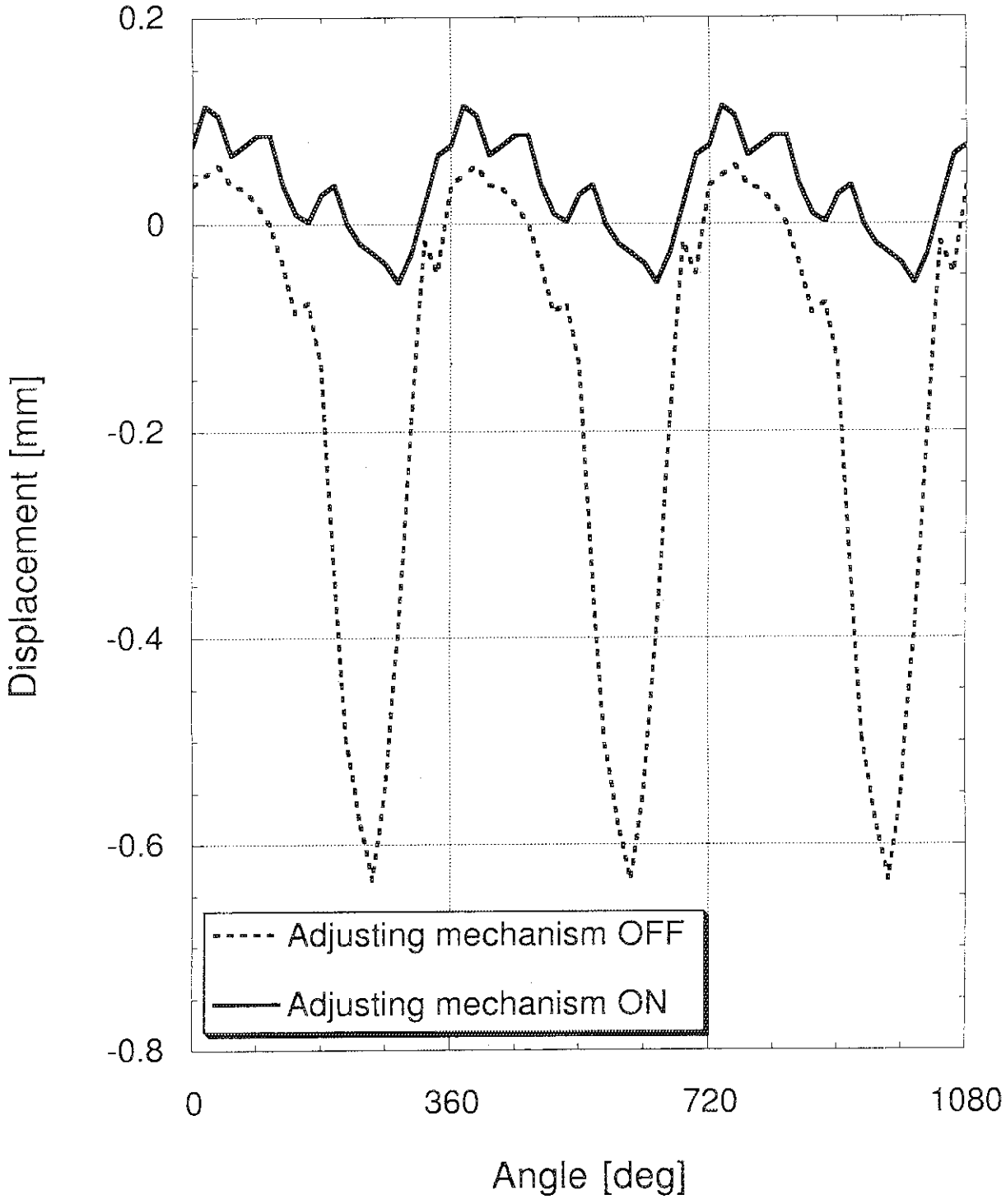

Fig. 7 Accuracy of the adjusting mechanism

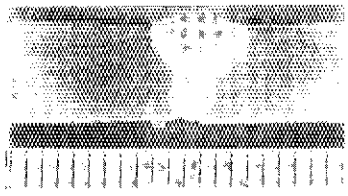

(a) A section of the welding part

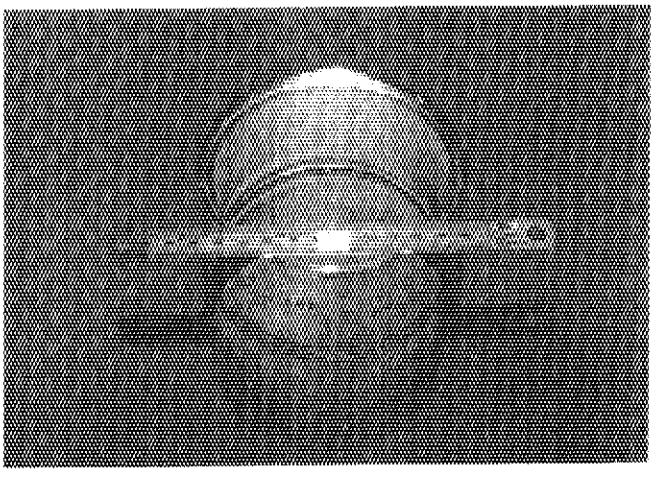

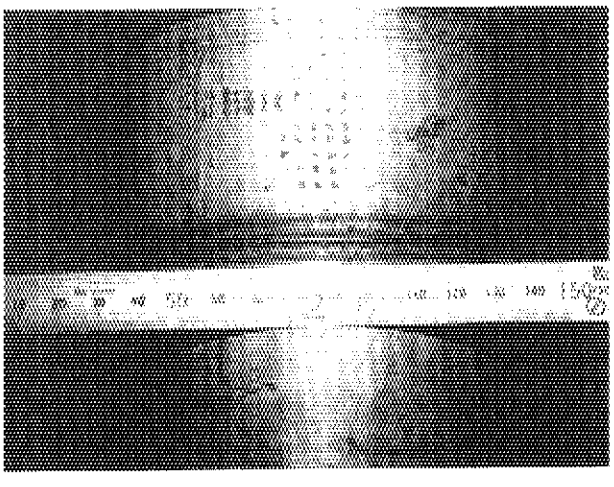

(b) Laser welding appearance

Test conditions
Laser power : 4.5kW
Traveling speed : 800mm/min
Focal point : 1.5mm (from the internal surface into the pipe thickness)
Assist gas : Helium gas with the velocity of 75l/min.

Fig. 8 Laser welding result of mirror type

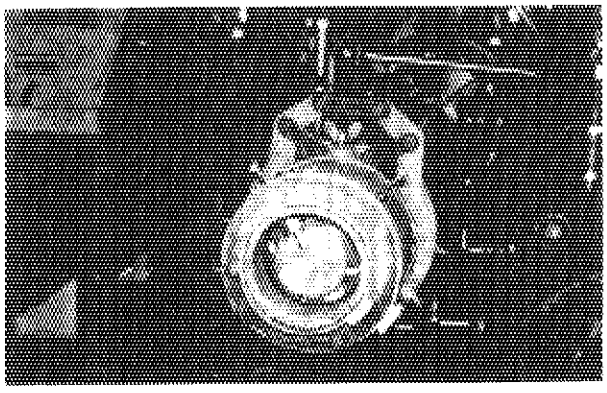

(a) Laser cutting with the dross cover

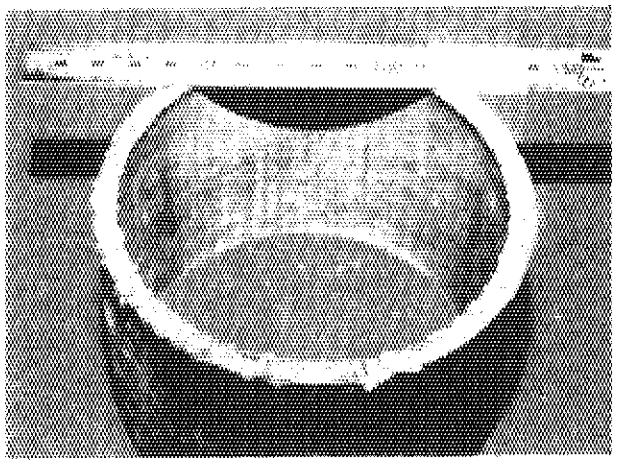

(b) Laser cutting appearance

Test conditions
Laser power : 4kW
Traveling speed : 1000mm/min
Focal point : 0.5mm (from the internal surface into the pipe thickness)
Assist gas : Oxygen gas with the velocity of 50l/min.

Fig. 9 Laser cutting result of mirror type

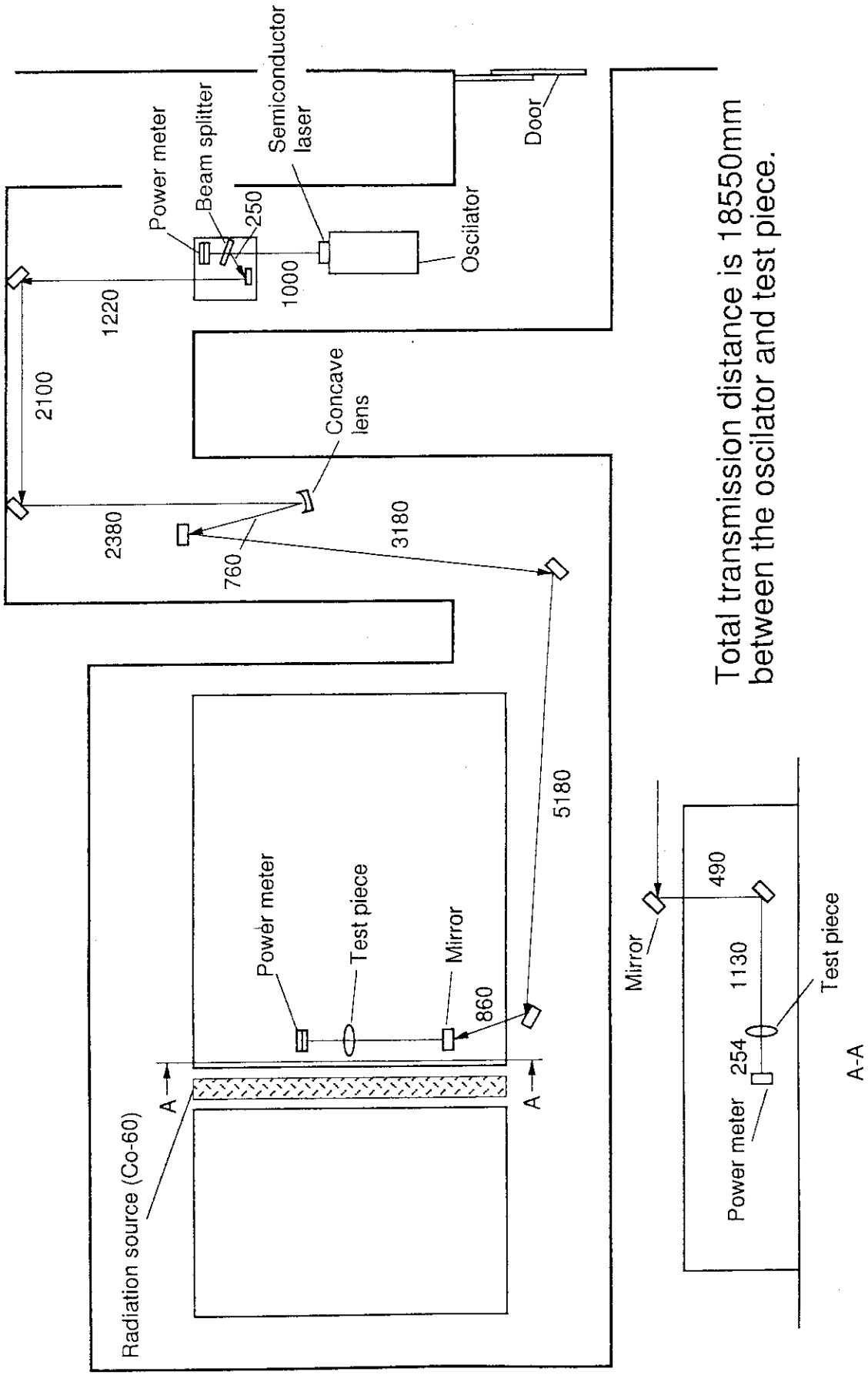

Fig. 10 Configuration of gamma-ray irradiation system

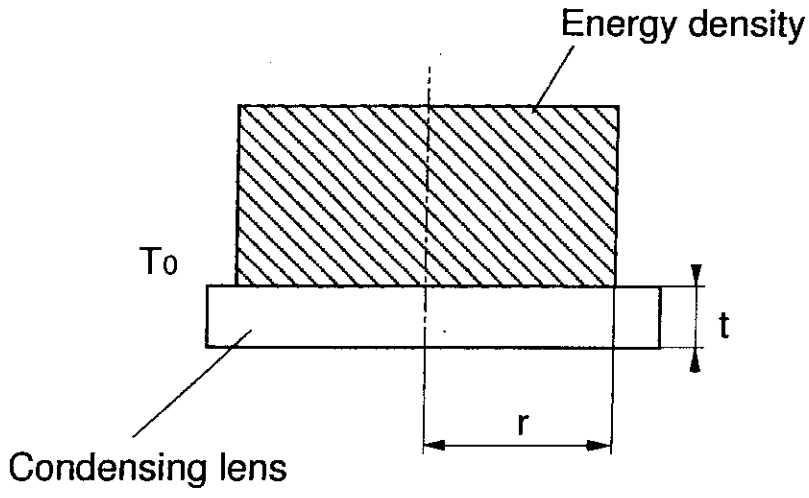

r	: diameter of beam	(24.8mm)
P_L	: laser power (shaded portion)	(1kW~20kW)
T_0	: temperature	(20°C)

Fig. 11 Energy density distribution of laser

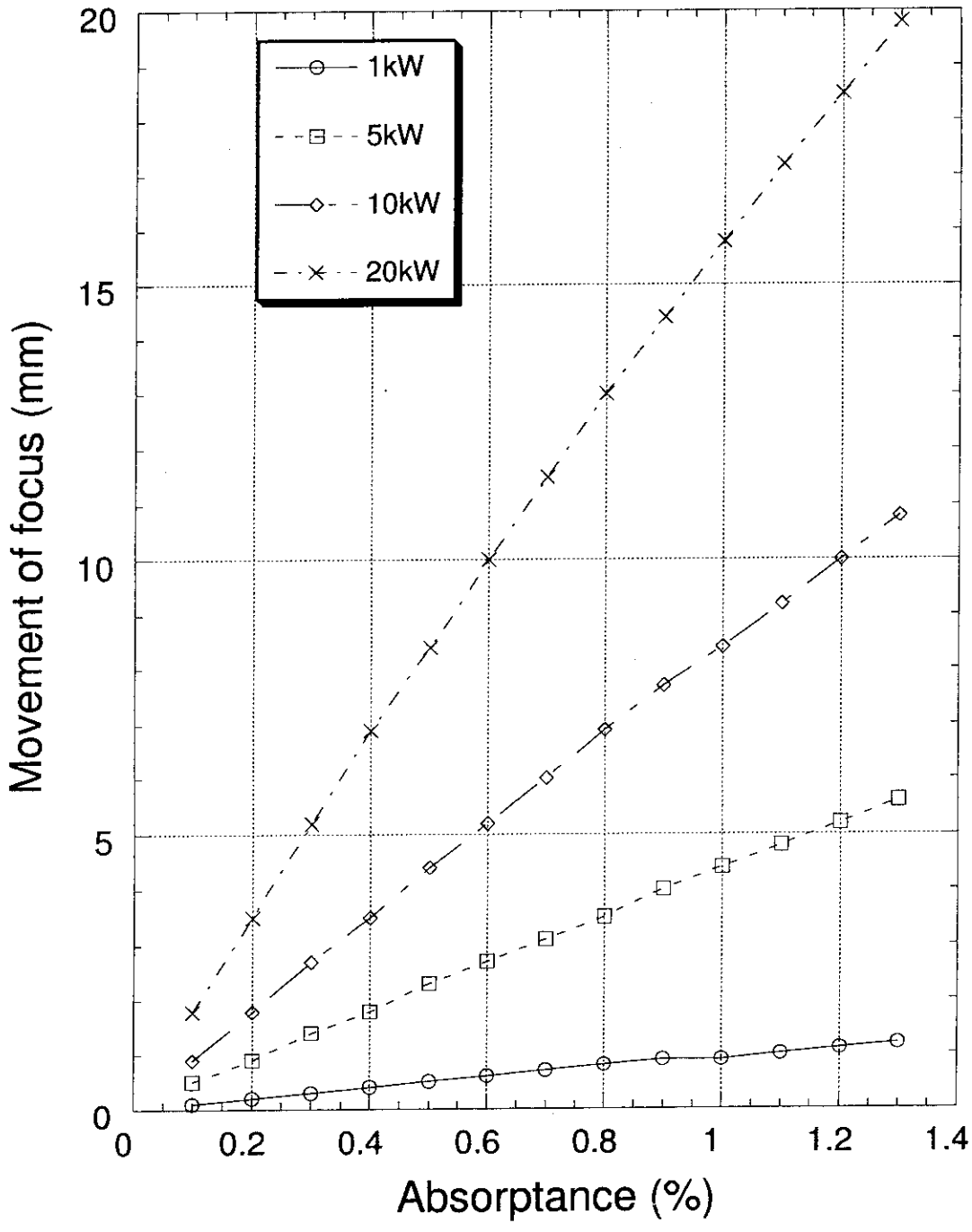

Fig. 12 The relation between absorptance and movement of focus