PNC TJ9164 96-012

運転監視コードシステム高度化作業

（動力炉・核燃料開発事業団　契約業務報告書）

平成８年３月

技術管理室
No.
8. 7. 5
動燃事業団大洗工学センター

（株）東　　芝

複製又はこの資料の入手については，下記にお問い合わせください。
〒311-13　茨城県東茨城郡大洗町成田町4002
動力炉・核燃料開発事業団
大洗工学センター　システム開発推進部・技術管理室

Enquires about copyright and reproduction should be addressed to: Technology Management Section O-arai Engineering Center, Power Reactor and Nuclear Fuel Development Corporation 4002 Narita-cho, O-arai-machi, Higashi-Ibaraki, Ibaraki-ken, 311-13, Japan

動力炉・核燃料開発事業団（Power Reactor and Nuclear Fuel Development Corporation）

PNC TJ9164 96-012

社内資料

1996年 3月

運転監視コードシステムの高度化作業

川島　正俊[1)]、森木　保幸[1)]

要　旨

「常陽」MK-III炉心における炉心管理手法の高度化および照射条件予測精度の向上に資するために運転監視コードシステムの高度化に関するシステム全体のグランドデザインおよび中性子束分布計算モジュールの作成を行った。

システムのグランドデザインでは、新システムの機能は原子炉運転前の予測計算と原子炉運転後の記録計算の二機能とすることおよび必要なシステム構成の概要を決定した。MK-IIIは炉心現行炉心から出力増大・二領域化等の変更があるので、予測計算では従来よりも事前安全確認用の出力分布の評価機能を拡充する計画である。

中性子束計算モジュールは照射場の核計算精度向上のために採用する燃料集合体あたり径方向に24メッシュとする分割詳細化とエネルギー群数の18群化を実現するために、有限差分３次元Tri-Z(24ﾒｯｼｭ/SA)拡散手法を用いて作成した。MK-III炉心の全炉心体系で集合体あたり24ﾒｯｼｭ・軸方向ノード数22・ｴﾈﾙｷﾞ-群数18とするサンプル計算を行い、結果の妥当性を確認した。

今後は、予測計算における安全性確認計算結果の評価方法の確立と、作成した中性子計算モジュールの計算結果を利用して具体化を図ることが必要である。更にシステム高度化のためにシステム作成に向けてシステムフロー制御、定数の作成、各種特性計算モジュールとＩＯ部分を作成していく必要がある。

＊本報告書は、（株）東芝が動力炉・核燃料開発事業団との契約に基づいて実施した業務の成果である。　契約番号；０７Ｃ４５６５

事業団担当部課；大洗工学センター　実験炉部技術課、事業団担当者；　長沖　吉弘

1)（株）東芝　原子力技術研究所

PNC TJ9164 96-012

March , 1996

Grand Design and Module Preparation for "MAGI" Code System Renewal [1]

Masatoshi Kawashima [2], Yasuyuki Moriki [2]

Abstract

"MAGI" system renewal aims at improving the prediction accuracy for the neutronic and thermal characteristics along with the plant upgrade. Present work discussed the grand design of the system and prepared neutron flux distrubution calculation module.

The grand design study has determined that the system would cover pre-operation prediction function and post-operation recording function. It was proposed that the prediction calculations would enhance safety confirmation for power distributions and other major nuclear and thermal hydraulic chracteristics because the MK-III core would achieve power uprating with two-zoned regions.

A prototypic flux calculation module was made with finite-difference 3-dimentional diffusion formulation for the Tri-Z geometry. The basic methodology for the new system includes 24mesh points per hexagon and 18 energy groups. The module was applied to the MK-III core as sample calucations.

To proceed the "MAGI" system renewal, it is required to establish items to be compared with safety criteria using the neutronic module outputs. In addition, it needs to make the basic modules of the system for calculation control, const ant preparation, various characteristics calculation, and IO control modules.

---

(1) The work performed by Toshiba Corporation under contract with Power Reactor and Nuclear Fuel Development Corporation. Contract No. ;07C4565
PNC Liaison ; Reactor Technology Section, Experimental Reactor Division, OEC
Yoshihiro Nagaoki

(2) Nuclear Engineering Laboratory, Toshiba Corporation

目　　次

図表リスト

1.　はじめに …… 1

2.　運転監視コードシステムのグランドデザイン …… 2

2.1 概要 …… 2

2.2 システムの計算機能 …… 3

2.3 システムの概略フロー …… 4

2.4 基本体系と核計算モデル …… 13

2.5 基本ファイル …… 23

3.　中性子束計算モジュールの作成 …… 25

3.1 中性子束計算モジュールの作成 …… 25

3.2 検証計算 …… 26

4.　おわりに …… 33

付録１　現行ＭＡＧＩシステム機能と関連ファイル …… 35

付録２　常陽炉心に於けるガンマ線スペクトルの例 …… 39

付録３　中性子束計算モジュール概要説明書 …… 43

付録４　中性子束計算モジュール入力例 …… 69

付録５　中性子束計算モジュール出力例 …… 80

付録６　中性子束計算モジュール実行のための大型計算機用ＪＣＬ例 …… 150

図表リスト

図2.3-1　予測計算フロー

図2.3-2　記録計算フロー

表2.4-1　集合体内均質モデル化

図2.4-1　MK-III標準炉心配置

図2.4-2　MK-III標準炉心軸方向モデル図例

図2.4-3　炉心集合体番号付け（現行 MK-II炉心例と同一）

図2.4-4　現行 MK-II炉心用"MAGI"軸方向ノード分割図

図2.4-5　MK-III用軸方向ノード分割モデル案

図2.4-6　B型特殊燃料集合体内部の非均質モデル化案

表3.2-1　中性子束計算モジュールの検証計算結果

図3.2-1　サンプル計算炉心配置

図3.2-2　サンプル計算炉心軸方向モデル図

図4.1-1　システム開発概略案

1. はじめに

本作業では、「常陽」ＭＫ－III 炉心における炉心管理手法の高度化や照射条件予測精度の向上に資するための運転監視コードシステムの高度化に関するシステム全体のグランドデザインを行った。「常陽」ＭＫ－III 炉心用の運転監視コード"MAGI-MK3"の高度化を図るための基本計算手法・モデルは、平成５、６年度に検討した"MAGI"の高度化のための核熱計算作業[(1),(2),(3)] の結果にもとづき選定した。計算予測精度の向上に向けたこれらの改良計算モデルと現行運転監視コード"MAGI"の運用経験も考慮して、新システムの主要機能とそれを実現するために必要な計算フローを作成した。

また、主な炉心特性計算の中核となる炉心全体の中性子束分布計算モジュールのプロトタイプを作成した。更に、「常陽」ＭＫ－III 炉心を対象とした検証計算を行い計算結果の妥当性を確認した。

---

(1) 川島正俊、森木保幸、「MAGI高度化のための核熱計算作業」、
PNC ZJ9164 94-010 、（株）東芝、1994年 3月

(2) 川島正俊、森木保幸、「MAGI高度化のための核熱計算作業(II)」、
PNC ZJ9164 96-003 、（株）東芝、1995年 3月

(3) 長沖吉弘、「MK-III用運転監視コードの方針」、技術課メモ-7-52、1995年 6月

2. 運転監視コードシステムのグランドデザイン

2.1 概要

「常陽」ＭＫ－III 炉心に対する運転監視コードシステムの高度化は、「常陽」ＭＫ－III 炉心における炉心管理手法の高度化や照射条件予測精度の向上に資することを目的としている。

精度向上のために核計算手法・適用モデルの詳細化を、中性子束計算方法として空間メッシュの詳細化と計算範囲の増大、エネルギー群数の増大、更にガンマ線計算手法の改良などについて、実現していく燃焼計算システムとしてまとめ上げることである。本作業では、そのための第一段階としてシステムのグランドデザインを行い、機能と全体フローを定めるた。

システムの高度化の方針は、現行の運転監視コードの運用経験などの継続性も考慮しつつ検討することとした。

2.2 システムの計算機能

「常陽」ＭＫ－III 炉心用の運転監視コードの高度化にあたり、計算機能を定め、機能別の計算の流れと計算項目を整理した。

現行ＭＡＧＩでは、付録１に示すように４種類の機能（サーベイ計算、設計計算、予測計算、記録計算）をもつように作成されている。

運用経験からは実質的に、設計計算・予測計算および記録計算機能が使用されてきている。”設計計算”としての使用は、常陽炉心の解析としての設計計算的な諸特性の計算に利用することを想定していた。実際には、炉心の大幅な変更などの予備解析としての利用はほとんどなく、炉の運用計画の作成のために使用されてきた。

運転前の安全性確認のための予測計算機能と運転後の記録計算機能が主に使用されてきた。

これらの状況を考慮し、新システムでは予測および記録計算の２機能とすることにした。

・予測計算；

運転実績を反映した記録計算結果を出発点として、次に行われる予定の運転サイクルの核熱特性を確認のための計算と安全性の確認を行う。また、長期運転計画の作成のための解析を行う。現行ＭＡＧＩの設計・予測計算機能を併せ持つかたちに統合することになる。

・記録計算；

運転実績記録データ（制御棒位置等）と前サイクルまでの記録計算結果を反映して当該サイクルの核熱特性計算を行い、必要な核熱特性計算結果を保存格納する。特殊燃料について、ＭＫ－II炉心から、ＭＫ－III 炉心への継続照射される集合体が存在することも考慮して、モデル化のルールなどを設定することが必要となる。

2.3 システムの概略フロー

計算機能別の計算項目整理と計算の流れについて考え方を図2.3-1 および図2.3-2に示す。

予測計算の流れ（図2.3-1 ）では、現行ＭＡＧＩモデルに比較して、制御棒の挿入による出力分布への影響に着目し、これを炉心の運用計画の作成および評価対象炉心の運転前安全確認に反映する。

この理由は、炉心の高性能化（線出力増大・ドライバー炉心の富化度の２領域化）に伴い、線出力増大による燃料中心温度の増大や出力分布の複雑化に伴うピーク出力バランスの変動などを、現行炉心よりは注意深く監視する必要性が増大するためである。これにより、システム計算フローは現行の"MAGI"より複雑化する。

最大線出力・被覆管最高温度の評価においては、制御棒吸収体位置・燃焼効果を考慮した想定範囲の中で、炉心特性の変動範囲を包絡して求める機能を含める必要がある。この事情により、予測計算における計算量はかなり増大し、出力分布の比較を行うことと、安全確認用に組み合わせによる選定機能が新たに必要となる。（現行ＭＡＧＩの予想計算では制御棒位置が指定された状態で、サイクル初期からサイクル末期までの核熱燃焼計算を行っている。）

このように、予測計算では、出力分布の包絡性の評価と制御棒価値の評価を考慮することになる。

臨界性は制御棒の全引き抜き、全挿入および臨界予測位置近傍の３カ所の位置で行うことになる。制御棒価値を計算する機能を内在させることが新たな機能となる。

出力分布計算はドライバー燃料対象に、燃料最高温度・被覆管最高温度計算の条件を、制御棒位置と燃焼効果を含めて行い、安全性確認のための、比較・選定を行う機能を持つものとする。このなかで、炉心の流量配分計算にも、上記の出力分布の変動と関連して評価対象体系が増大することになる。

運転中の出力分布の変動を包絡するために、燃焼欠損反応度を補償するサイクル末期の制御棒挿入深度予測を必要とするが、燃焼計算後の臨界調整を自動的にすることを避けている。これは、これまでの運用経験から炉心反応度変化については、運転経験のフィードバックをバイアスするなどの方法が確実であり、迅速に行えるためであ

る。

動特性パラメータについては初期・末期の時点で選択した制御棒状態において計算するものとする。この場合、随伴中性子束分布計算を行うことになる。

全体として、予測計算の流れは現行ＭＡＧＩのフローから大きく変更することになると同時に、計算量と結果の保存量が大幅増大となる。

記録計算は図2.3-2 に示すように、現行ＭＡＧＩと同様に実測ベースの制御棒位置に対して当該サイクルの特性項目について計算することになる。

計算フローは基本的には、現行ＭＡＧＩの記録計算の流れと同等になる。運転実績にもとづく制御棒位置を反映した計算により、サイクル初期・末期の炉心特性を計算する"one way" 計算フローである。

予測計算　サイクル初期

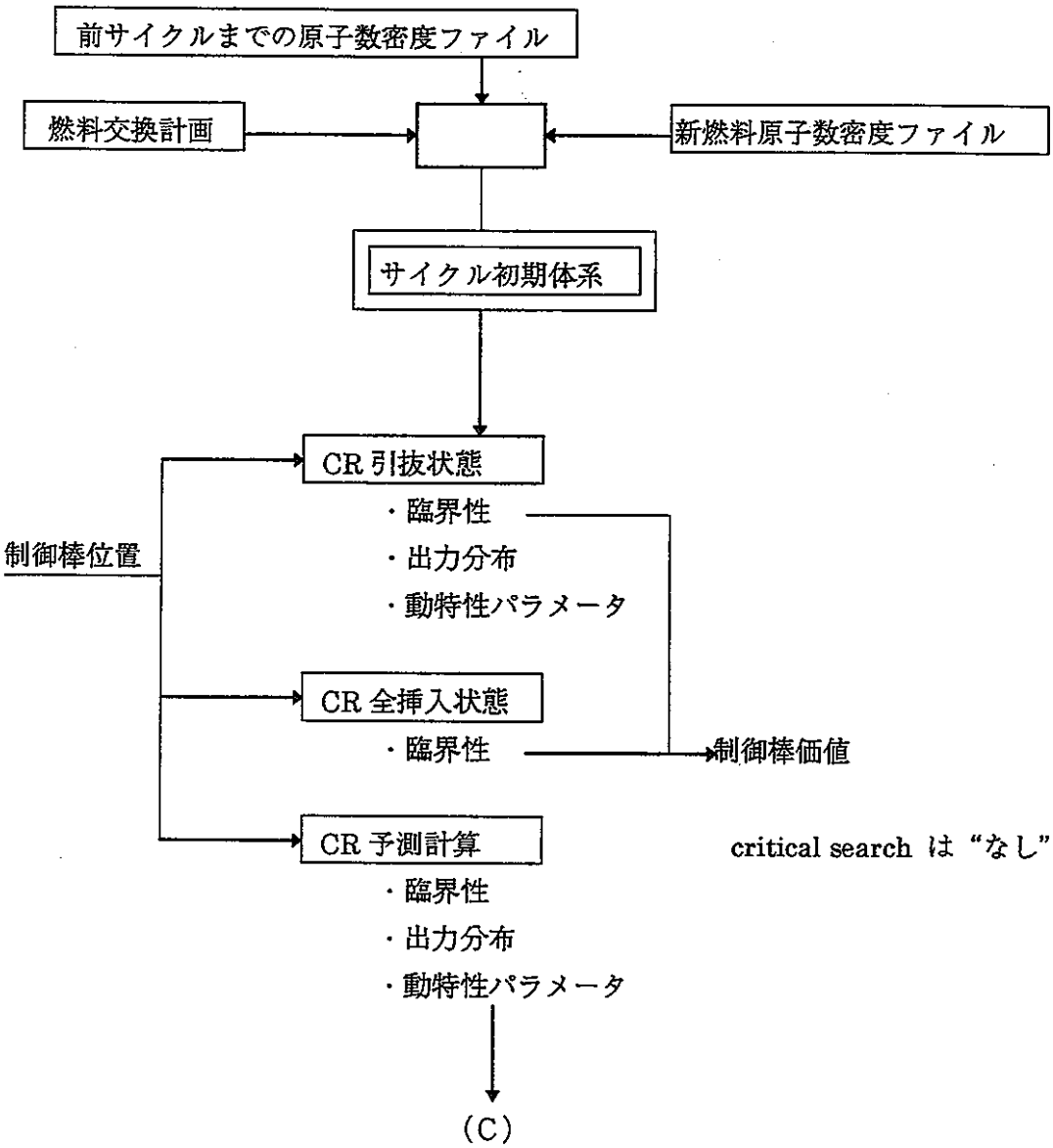

図 2.3-1　予測計算フロー　(1/5)

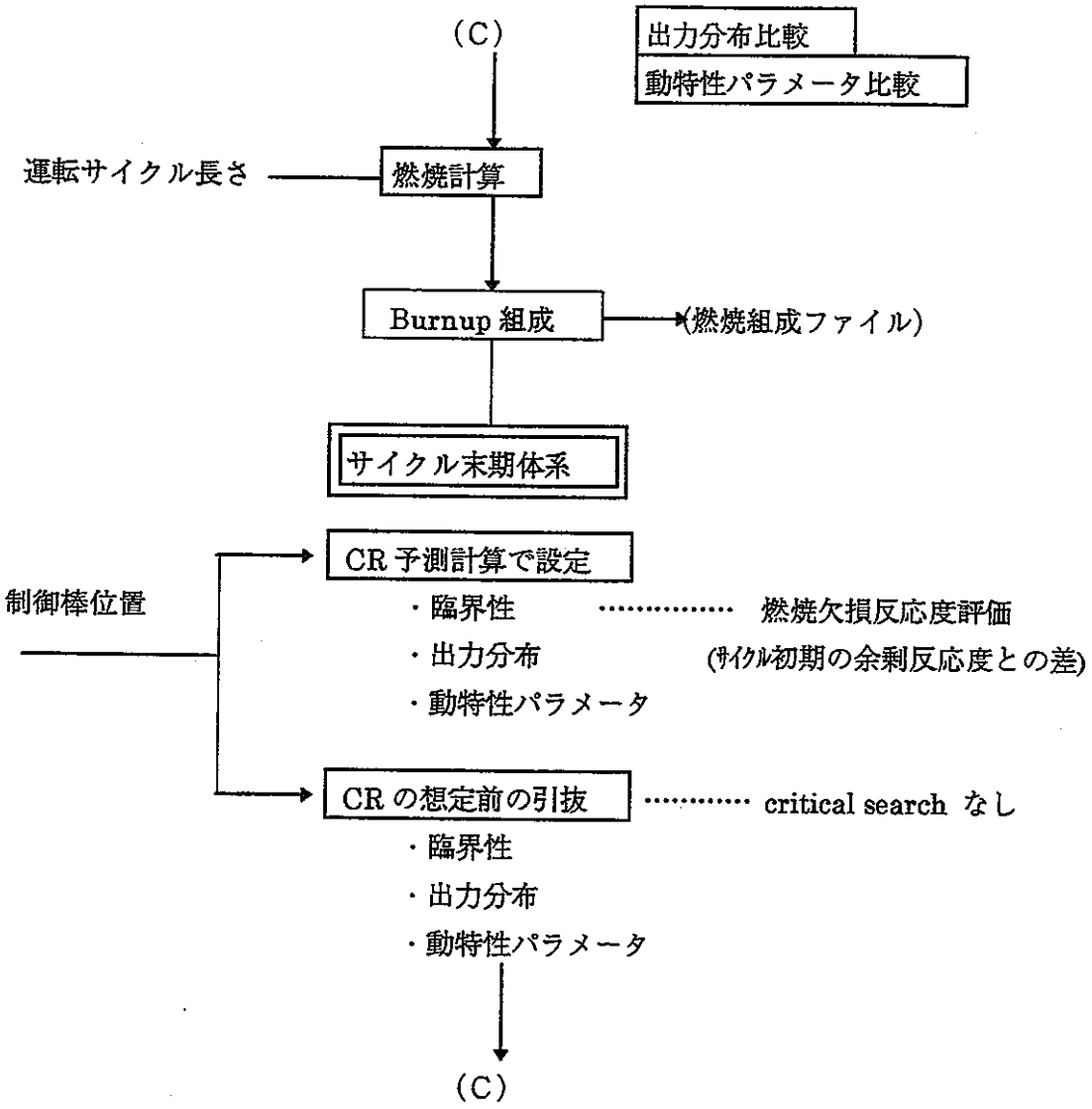

図 2.3-1　　予測計算フロー　(2/5)

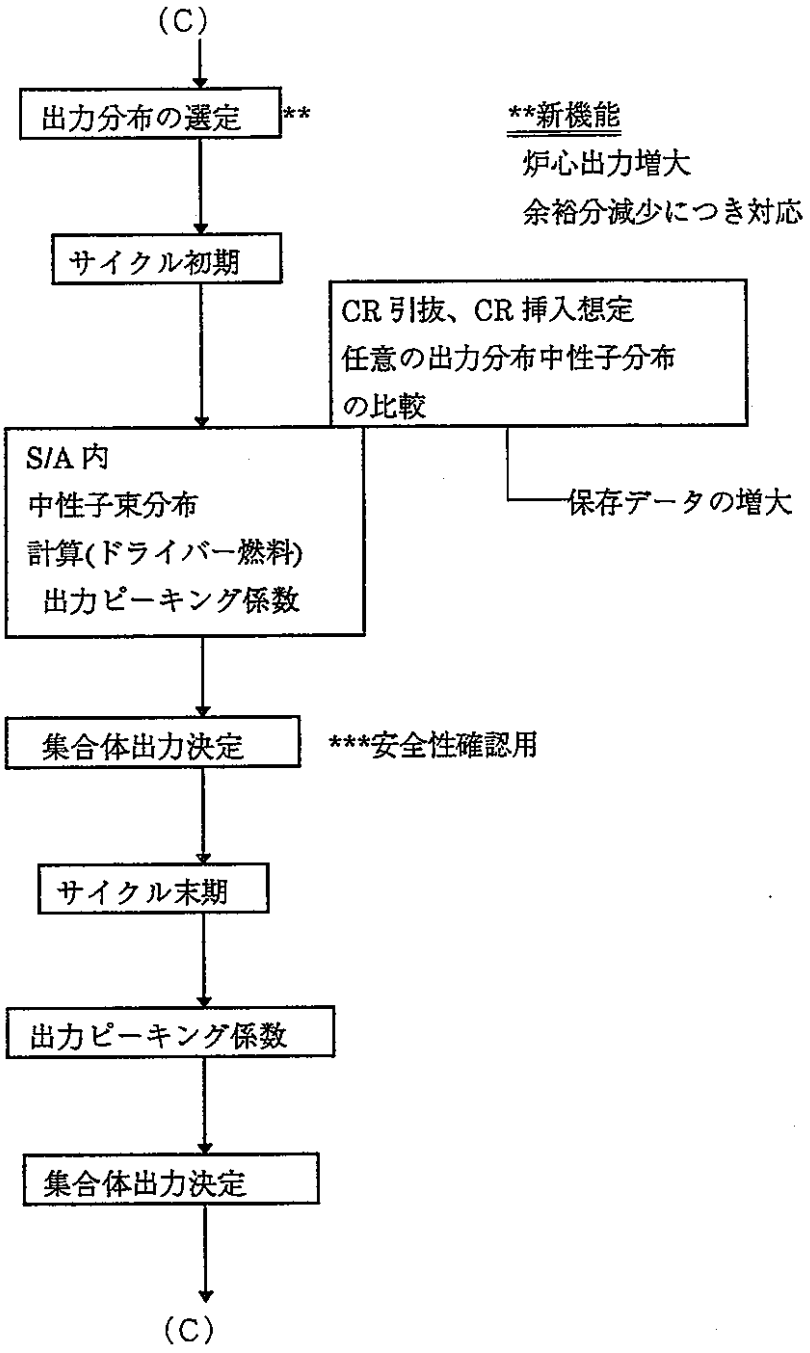

図 2.3-1　　予測計算フロー　(3/5)

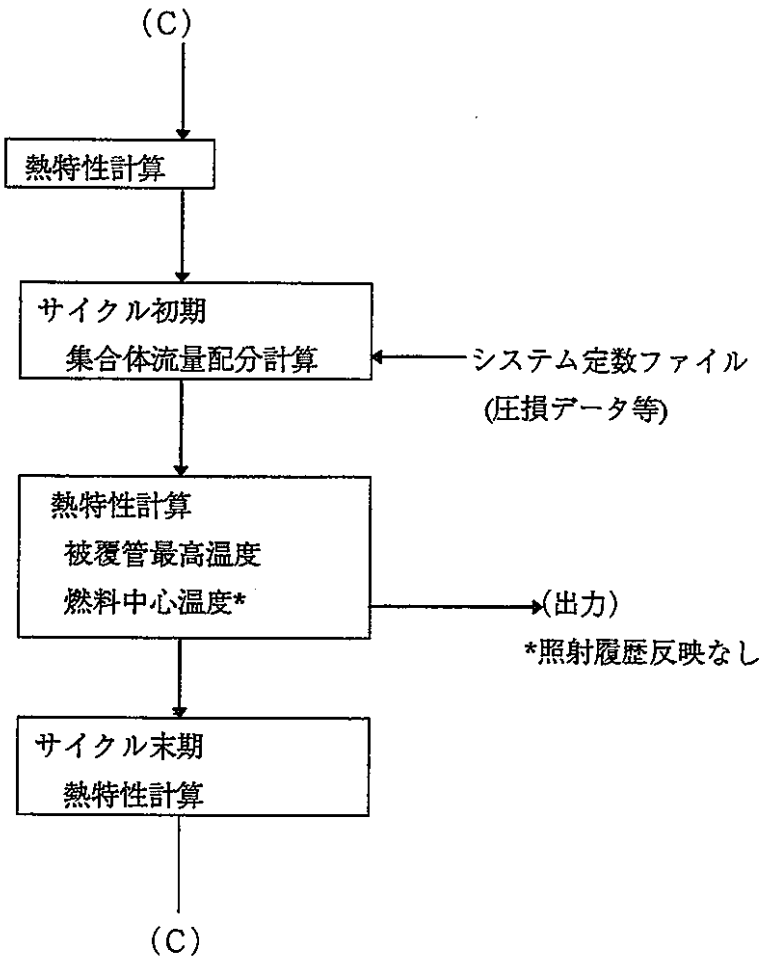

図 2.3-1　　予測計算フロー　(4/5)

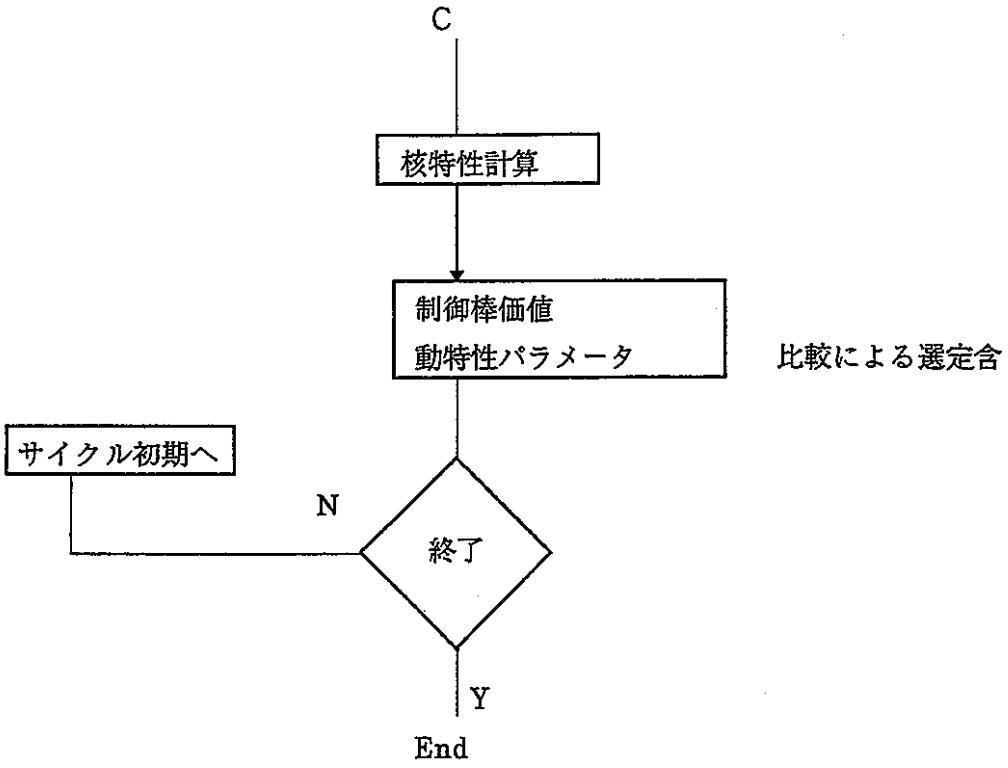

図 2.3-1　　予測計算フロー　(5/5)

記録計算

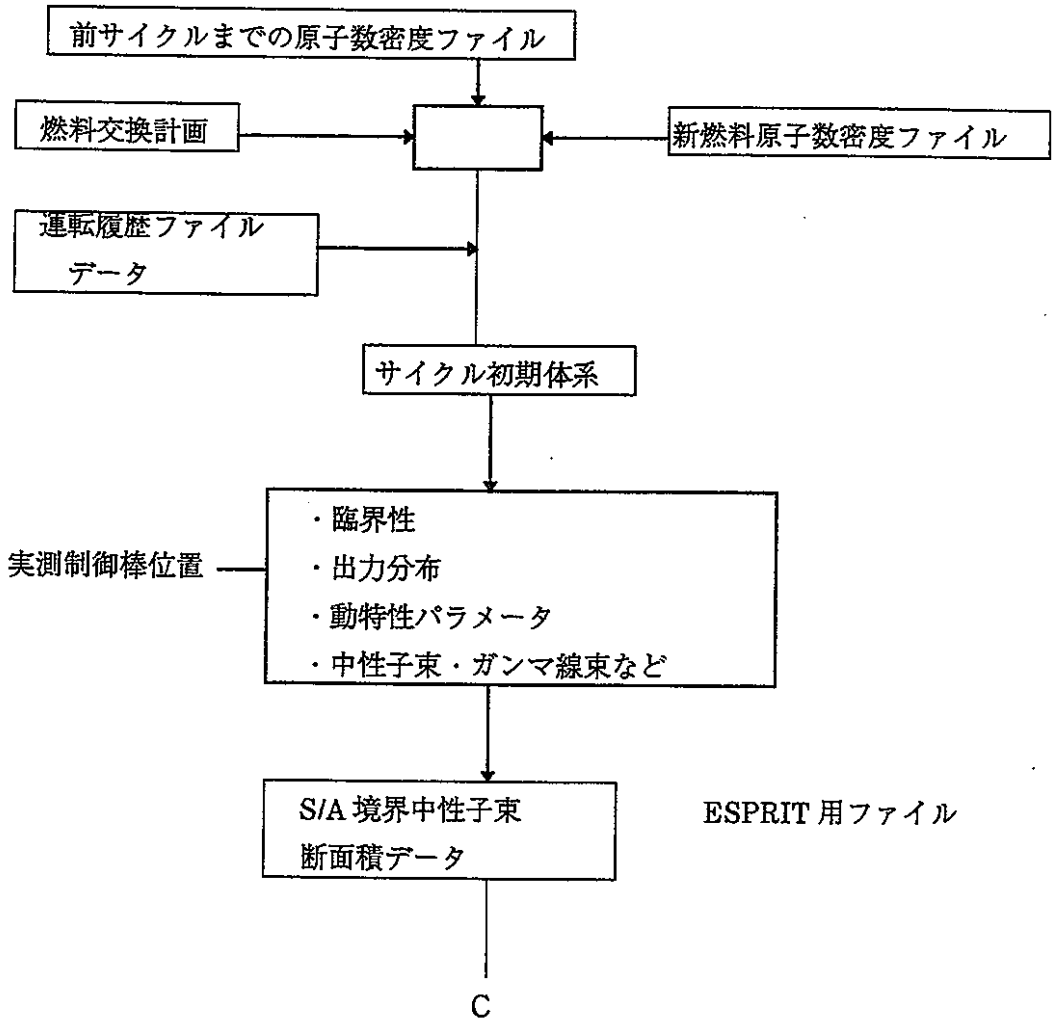

図 2.3-2　記録計算フロー　(1/2)

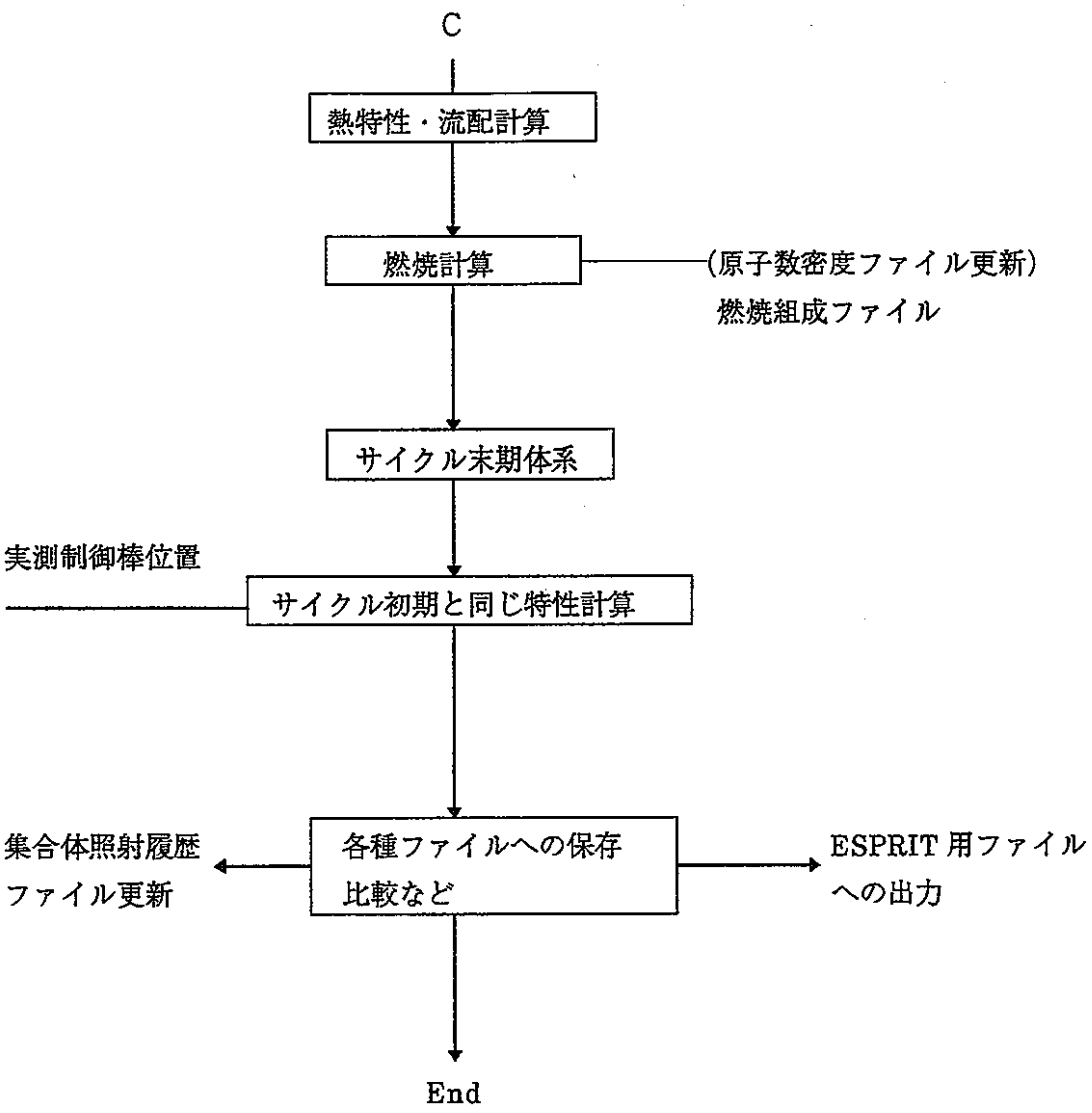

図 2.3-2　　記録計算フロー　(2/2)

2.4 基本体系と核計算モデル

a) 炉心体系

炉心体系は図2.4-1 および図2.4-2 に例示されるＭＫ－III 炉心の構成を表現できる詳細メッシュモデルの全炉心モデルを採用する。

また、図2.4-3 に示される炉心位置の表示と集合体番号の対応は現行ＭＡＧＩにおける定義（ルール）と同一とする。

軸方向の計算範囲は図2.4-4 に示される現行ＭＡＧＩの軸方向モデルにくらべ、広い範囲を対象とする。

炉心部は図2.4-5 に示すように、制御棒吸収体の全引き抜き状態と全挿入状態、部分挿入模擬などを考慮して、2.5cm 程度のメッシュ幅を選択する。

これらのことにより、炉心とその周辺のモデル化による模擬性は飛躍的に良好になるが計算メッシュ数が大幅に増大する。

軸方向メッシュサイズの最終決定の段階の選択により、ＭＫ－II炉心より継続照射される照射リグに対しても適用できるように配慮することは可能である。

b) モデル化

予測精度向上のために集合体あたり径方向２４メッシュとすることを利用して、各集合体タイプ別に表2.4-1 示す組成分割をする。特殊燃料で断面仕様が最も複雑なＢ型特殊燃料集合体は図2.4-6 に示すような分割を行う。

予測計算では、中性子束分布計算モジュールには、集合体当たり２４メッシュと６メッシュの選択が可能である。集合体あたり径方向６メッシュを選択する場合は、集合体内の比均質モデルを適用しないことになる。

記録計算では、照射後試験結果との比較を汎用化できるように、集合体あたり径方向２４メッシュのモデルを選定することが必要である。

予測計算では２つの立場が予想される。ひとつは、当該サイクルの運転前の安全性確認のための予測計算であり、他の場合は、長期の運転計画作成などの場合である。

前者の安全性確認計算は、２４メッシュモデルによる詳細計算を適用することが必

要である。これは、記録計算による実績との比較結果をフィードバックする上で、両者の手法が整合していることが必要なためである。

後者の場合には、予測計算の目的により計算時間の観点から、集合体あたり径方向６メッシュの選択による短時間計算化が可能と考えられる。この場合は、集合体断面内で非均質組成を定義することはできない。

したがって、選択するモデルにより計算結果の解釈が異なることに注意する必要が生ずる。例えば、制御棒価値計算については、２４メッシュモデルでは制御棒吸収体の Mass Lump効果が含まれた反応度価値が直接計算されるが、６メッシュモデルによる制御棒価値では、計算された反応度価値に対して、予め求めておいた"Mass Lump"補正係数を乗じて反応度価値の予測値を求めることになる。

c) 核計算手法

炉心計算におけるドライバー燃料等の集合体内の非均質モデルは表2.2-1 に示したが、それぞれの領域の実効断面積は中性子については70群JFS-3-J2またはJFS-3-J3.2を用い均質組成として求める。

群数縮約は別途行われる２次元ＲＺ拡散計算による領域平均スペクトルを用いて18群に縮約する。

γ線については、共鳴がないので、核種毎にP1近似断面積をコード内またはシステム定数ファイル内に内臓し読み出すものとする。

γ線データはRADHEAT-V3コード[4] 用の２０群断面積を基本とする。７群への縮約は、付録２[5],[6] に示すガンマ線スペクトルから見て、炉心・反射体・制御棒・中性子遮蔽体領域の４つの領域データを予め内蔵して利用する。特別に、ガンマ線スペクトルをサイクル毎には計算しないものとする。

---

(4) JAERI-M 7155 RADHEAT-V3, K. Koyama et al.

(5) 森木保幸、川島正俊、「高性能炉心の炉内ガンマ発熱計算」、PNC ZJ9164 91-004 、（株）東芝、1991年 3月

(6) 長沖吉弘、「高度化"MAGI"作成のための支給データ」、技術課ﾒﾓ-7-203、1996年 3月

これらの扱いは、中性子・ガンマ線ともにエネルギー群数を増加させているので、ある程度粗い領域ごとに与えても計算精度に影響しないという利点を活用して簡易化した扱いとする。これは、現行のＭＡＧＩ－ＬＴＡに相当するものであるが、全体としては作成し直すことになる。

中性子・ガンマ束分布計算についてはTri-Z 拡散計算により求める。ガンマ線についての拡散近似は炉心とその周辺では精度を確保して適用可能と考えられる。現行ＭＡＧＩでは、ガンマ線の発生源で発熱するとする in-situ近似で使用されているが、この手法よりは精度向上となる。ガンマ線の拡散近似の精度向上方策として、厳密計算との比較などにより確認していく必要がある。例えば、炉心周辺反射体・中性子遮蔽体領域では補正係数を予めもとめておき計算結果に補正係数を適用することなどが考えられる。

ガンマ線束計算まで含めた、中性子・ガンマ線結合定数を使用しないこととしたので、中性子束分布計算の後で、ガンマ線源分布を計算は、それをもとに、固定線源問題を解く拡散コードとして整備していく必要がある。

出力分布計算では、ドライバー燃料領域の最大出力ノードについて、集合体内中性子束分布を計算することにより出力ピーキング係数を算出する。

従来の方法では１群ポテンシャル理論モデルを利用してきた。新しいシステムでは、現行モデルと異なり、多群化・多メッシュ化したことにより着目集合体に対する境界条件が精度よく反映できるので、全体として精度の向上が図れる。この多群ポテンシャル理論モデル部分も新たに追加整備する必要がある。

動特性パラメータ計算のために、随伴中性子束計算機能とそれを使用した空間積分ルーチンを新たに作成する必要がある。

ドライバーの燃焼計算は集合体単位で軸方向ノード毎に行う。これは現行ＭＡＧＩと同じ方式である。燃焼計算モジュールは現行システムの燃焼計算部分を利用して整備が可能である。

表2.4-1　集合体内均質モデル化

非均質モデル 集合体	中心 6 Triangles	周辺18 Triangles
ドライバー燃料	集合体内のピン格子均質組成	ラッパ管、周辺冷却材を含めた残りの燃料との均質組成
制御棒吸収体	吸収体ピン部分をmass lump	残りの構造材・冷却材の均質組成
制御棒チャンネル	従来と同一の全体均質組成	同左
内側反射体	従来と同一の全体均質組成	同左
特殊燃料Ａ型	中心の試験ピン均質組成	残りの組成でバランス
特殊燃料Ｂ型	中心の構造材均質組成	周辺の台形部分は対応する領域の均質組成（やや複雑）
特殊燃料Ｃ型 ＩＮＴＡ－Ｓ ＡＭＩＲ－Ａ ボロン遮蔽体	内側ラッパ管内の燃料格子の均質組成	残りの燃料と二重ラッパ管と冷却材の均質組成

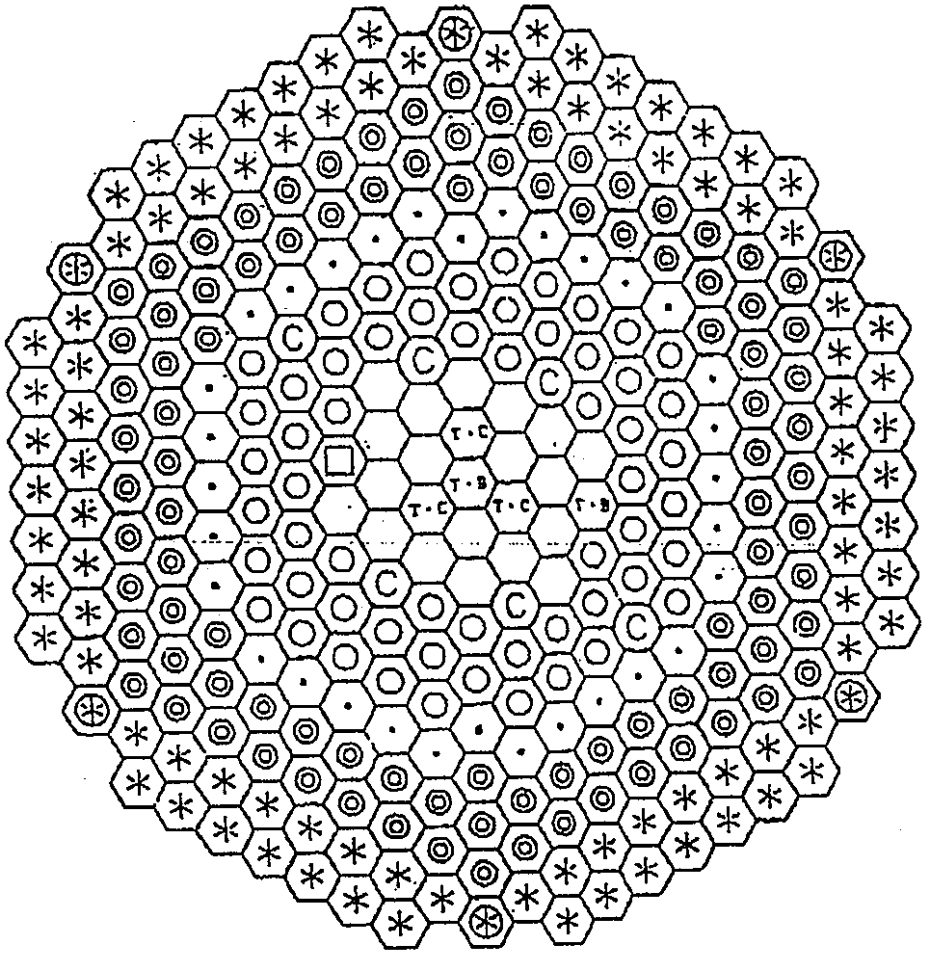

：内側炉心燃料

：外側炉心燃料

：制 御 棒（6体）

：内側反射体

：外側（A）反射体

：中性子遮蔽体（B_4C）

：中性子遮蔽体（B_4C）スリット付き

：特殊燃料集合体・タイプB

：特殊燃料集合体・タイプC

：CMIR

図2.4-1　MK-III標準炉心配置

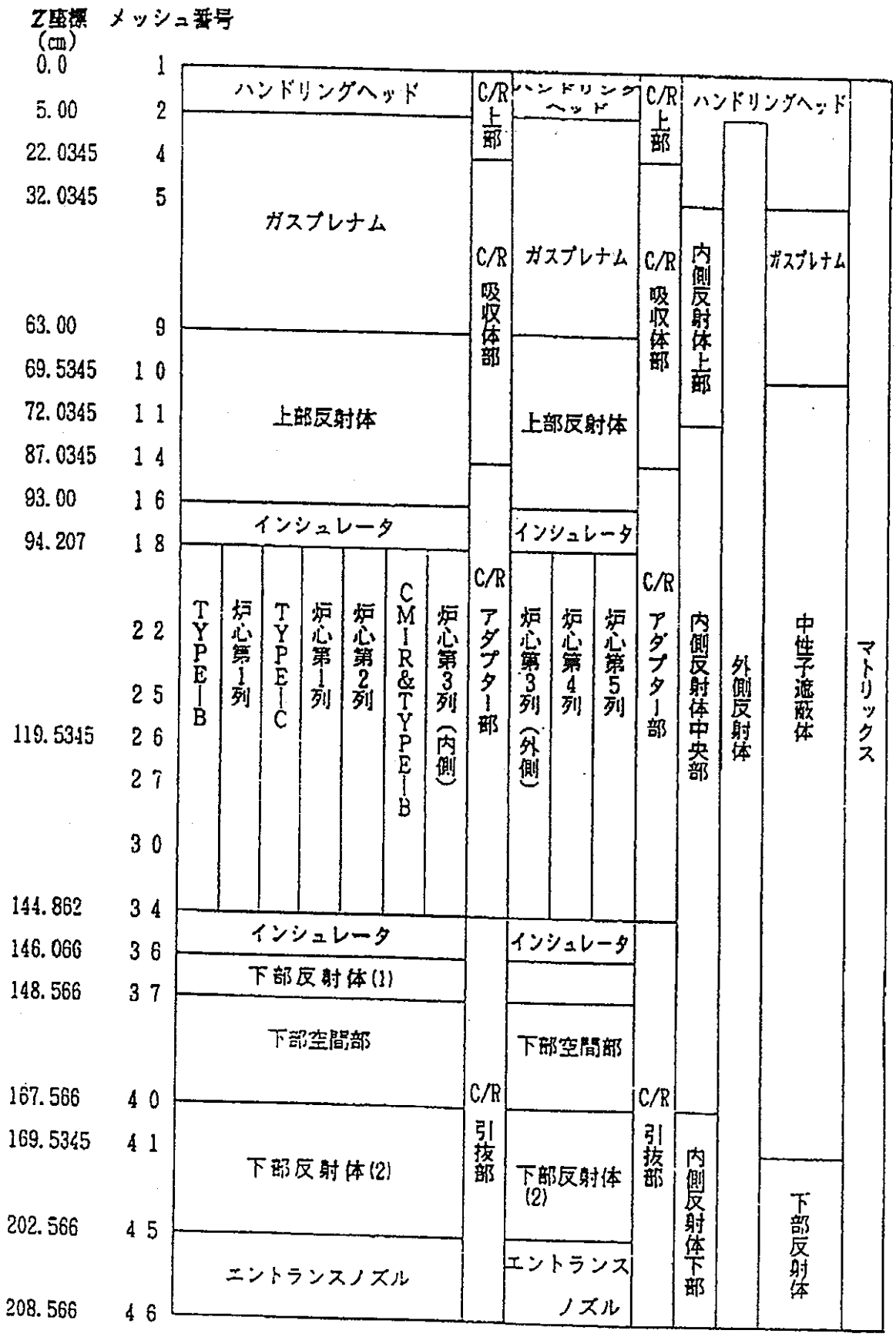

図2.4-2　MK-III標準炉心軸方向モデル図例

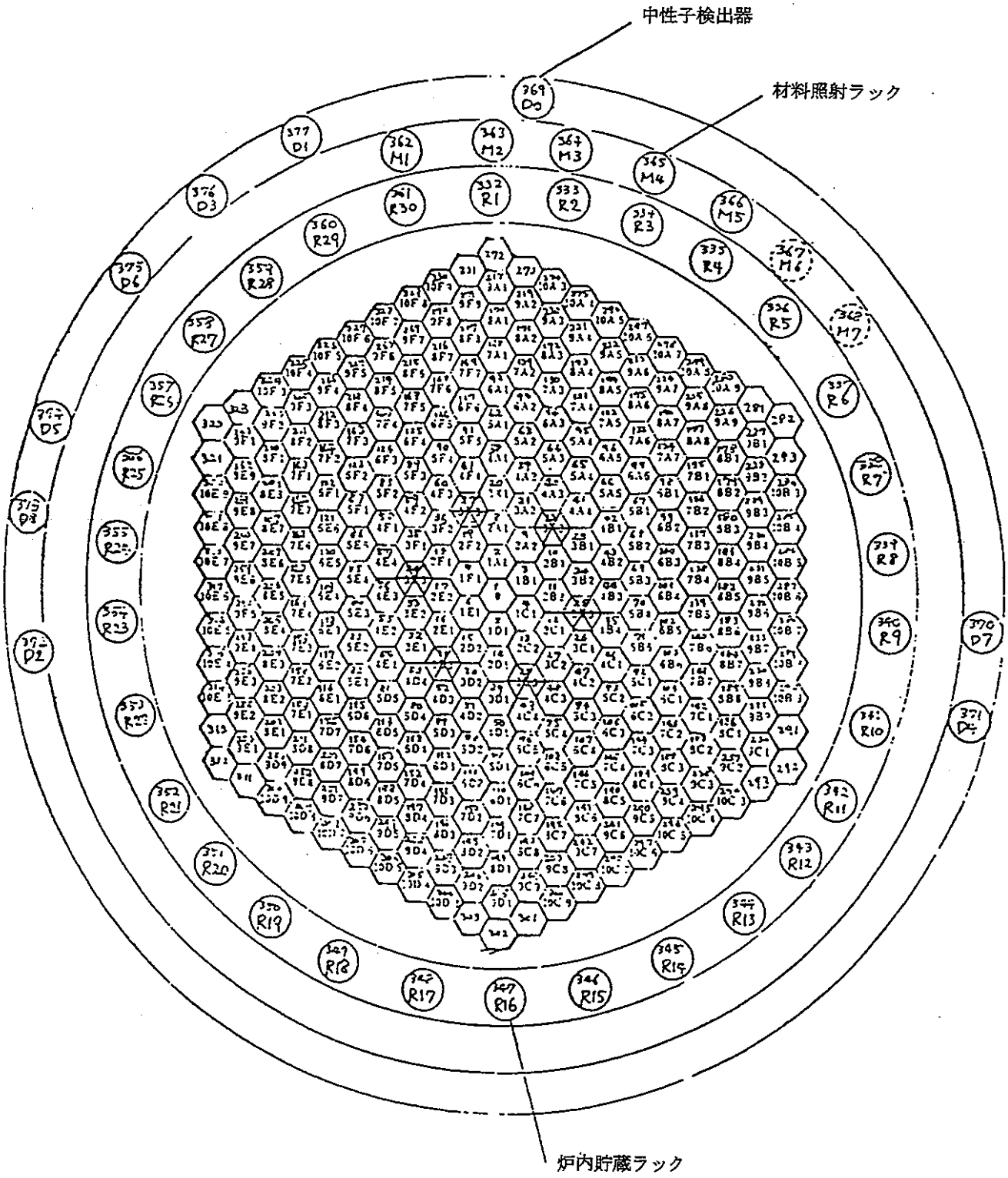

1～331	炉心構成要素	
332～361	炉内貯蔵ラック	直線計算体系外
362～368	材料照射ラック	直線計算体系外
369～377	中性子検出器	直線計算体系外

図2.4-3　炉心集合体番号付け（現行 MK-II炉心例と同一）

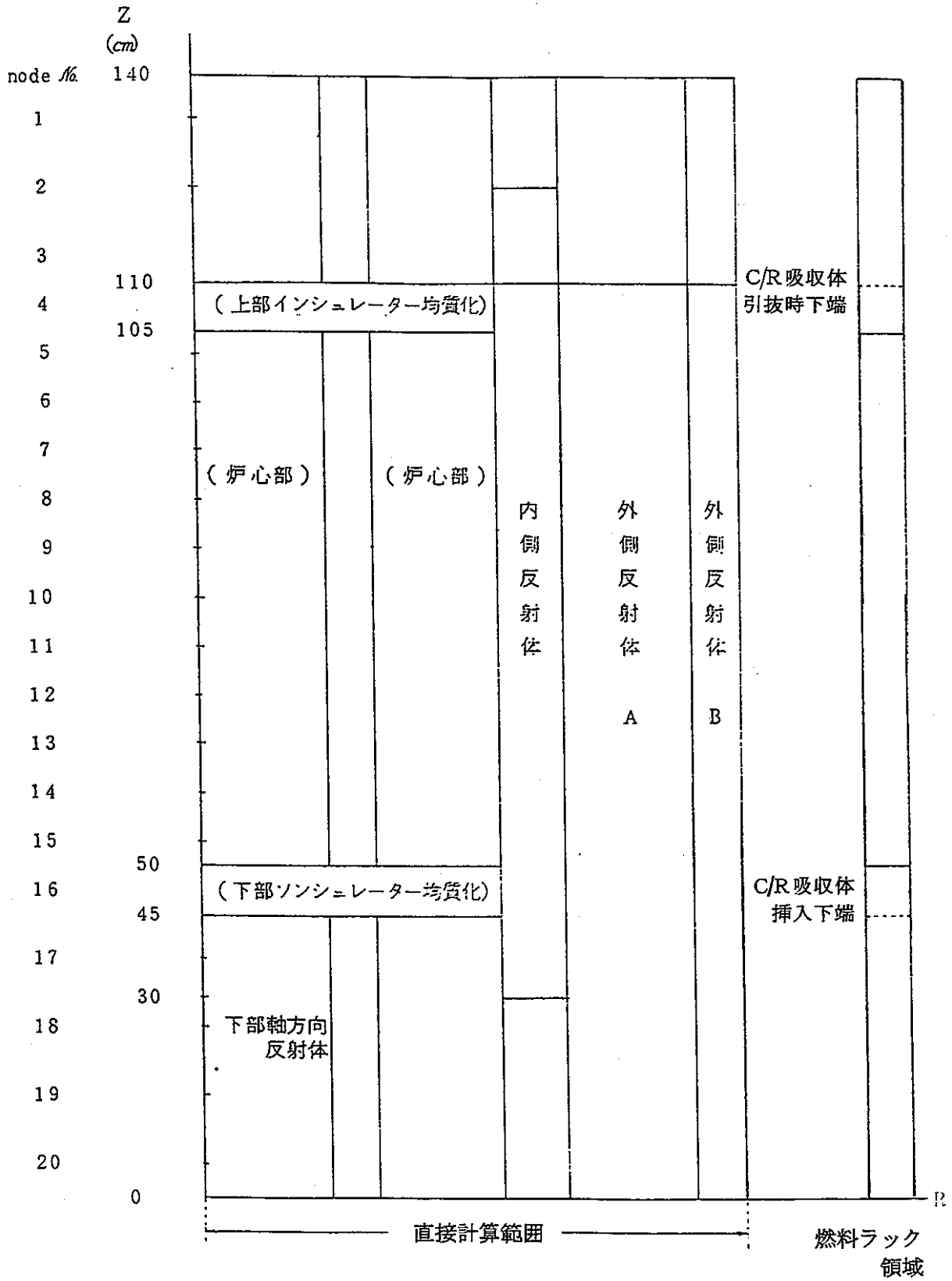

◎ 軸方向ノード計算体系には２０ケ

◎ C／R吸収体ノードは　　１３ケ（計算体系とは独立に考える）

図2.4-4　現行 MK-II炉心用"MAGI"軸方向ノード分割図

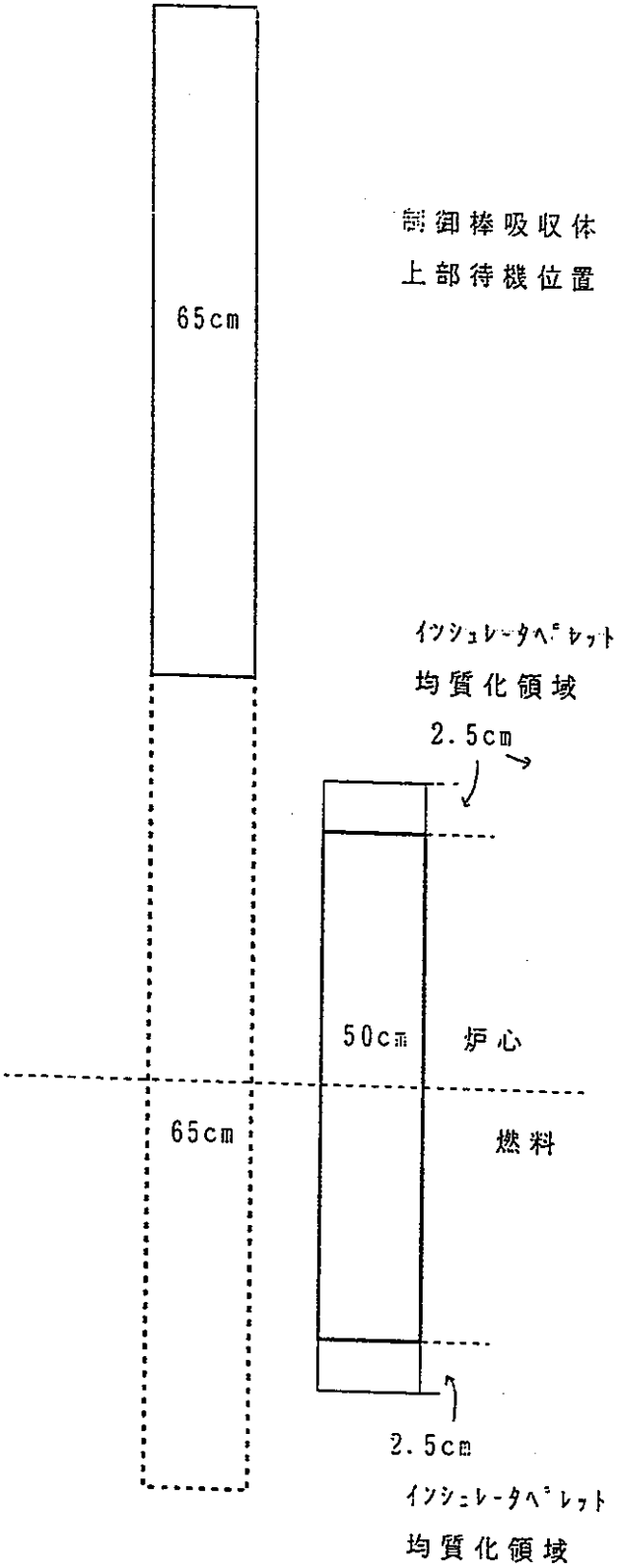

図2.4-5　MK-III用軸方向ノード分割モデル案

非均質モデル

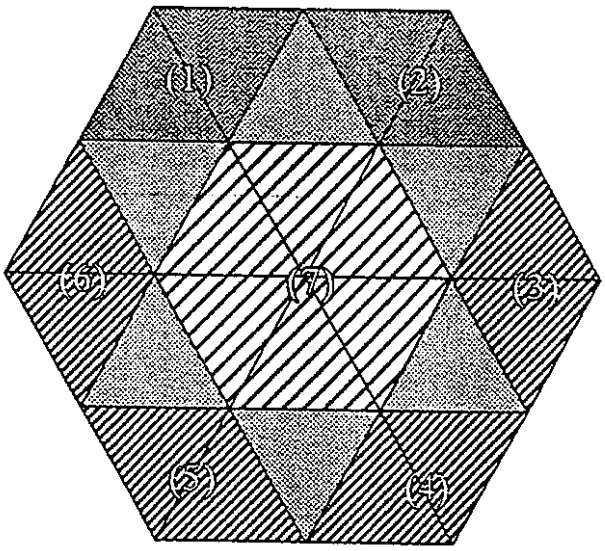

Compartment No. (1), (2)

Compartment No. (3) - (6)

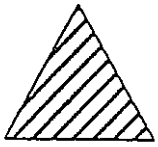

Compartment No. (7)

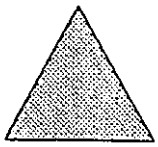

Sodium

図2.4-6　B型特殊燃料集合体内部の非均質モデル化案

2.5 基本ファイル

現行ＭＡＧＩが必要とするファイルについては、付録１に示されている。新システムについても、基本的には同等のファイルとのＩ／Ｏ関係をもつことにする。下記のファイルが基本となる。

a)集合体ライブラリー

ドライバー燃料の燃焼計算が集合体のノード毎の平均としての組成変化を求めることにしたことにしている。これは集合体ライブラリーの構成の選択には大きな要因である。

集合体ライブラリーは炉心構成に必要なすべての組成を燃焼ノード単位に与える基本入力となる。

装荷される集合体の種類別に組成データを保存する。２４メッシュ詳細モデル用に、予め決められたルールにしたがって格納しておく（集合体種類別にある領域毎の均質化組成とする）。

当該サイクルの燃焼計算結果を複数の外部ファイルを利用して更新していく。

b)断面積ファイル

中性子断面積ライブラリーには高速炉解析用のJFS-3-J2/J3 を７０群セットを利用する。これをもとに中性子１８群に縮約する。ガンマ線発生断面積も１８群中性子断面積と併せて作成する。ガンマ線輸送計算のための断面積は。RADHEAT-V3コードシステムにより７群化実効断面積を作成する。中性子・ガンマ線に対してミクロ断面積で扱う。このミクロ断面積は燃焼計算に利用する。

c)システム定数ファイル

炉心の核熱特性をもとめるために必要な諸定数などを格納しておく。特に熱計算に必要な定数はライブラリー化してここに保存する。

d)記録計算とのＩ／Ｏファイル

記録計算のための入力をJOYDAS出力として受け渡しを行う。また、JOYDASへの動特性パラメータの受け渡しに利用する。

e)出力ファイル

サイクル毎の大量な計算結果を格納する。これは、出力処理のために利用すること

が中心となる。サイクル毎に更新する。

f)集合体照射履歴ファイル

記録計算（一部の予測計算）において、集合体毎に炉内の照射記録と対応する核熱特性計算結果を記録しておくものである。集合体が経験したすべてのサイクルについての照射場における経験に対応する中性子束・発熱・温度などの履歴をノード単位で記録する。燃料集合体内の照射特性を計算するESPRITシステムの入力としても利用できるようにする必要がある。

3. 中性子束計算モジュールの作成

3.1 中性子束計算モジュールの作成

a)汎用コードの炉心体系専用化のための整備

常陽ＭＫ-III炉心用の中性子束計算モジュールを作成した。メッシュモデルの指定は六角形状の集合体を現すためにTri-Z 三角メッシュとする。ただし、三角メッシュについては、集合体あたり２４分割をレファレンスとする。ただし、集合体あたり６分割の場合の計算オプションも準備した。

境界条件；

全炉心体系専用とする。

モデル化範囲；

炉心体系は炉心の中心から数えて１０列までを含むものとしている。軸方向は最大２５メッシュ程度までが扱うことを想定している。列と軸方向ノード数についてはコード内で指定し、変数領域の最適化を可能としている。

モデルの範囲を設定するためには、本モジュールを稼働させる計算機システムに依存する。大洗工学センターの大型計算機 FACOMシステムを利用する場合は、計算機のコア容量が約８０Mbyte 程度が通常の上限（Ｄ－クラス）である。本モジュールのコアメモリーは空間メッシュ総数とエネルギー群数の積が支配的である。

今回作成した中性子束分布計算モジュールのプロトタイプ版をＤ－クラスで稼働するための目安は、１８群の全炉心（１１列）を扱う径方向２４メッシュ／集合体のモデルでは２５メッシュ程度となることが、下記の検証計算の実施のなかで明らかになった。

断面積と群数

拡散計算のエネルギー群数は最大１８群、散乱減速群数は最大１７群までのフルマトリックスが扱えるようにした。

b)中性子計算モジュールの作成

核計算モジュールは、詳細メッシュ対応体系と使用するマクロ断面積により固有値と中性子束が計算できるように作成した。

核計算モジュールについては、付録３として計算フロー、入力データなどを示す。

3.2 検証計算

図3.2-1 および図3.2-2 に示される炉心体系について、平衡サイクル初期体系を設定し検証計算を行った。核計算モジュールの検証には７、１８群として２通りのメッシュ体系で行った。この検証検討は、炉心特性の観点からＭＫ－III 炉心の設計検討をもとにまとめられた支給データ[7] との比較により行った。

比較用の設計検討計算結果は、２次元拡散計算６群（２次元ＲＺ体系＋２次元ＸＹ３角メッシュ体系）に基づく値である。

中性子束計算モジュールサンプル計算はＭＫ－III 標準平衡炉心を対象に、下記の計算の流れで行った。この計算では、炉心全体の中性子バランスの検証材料となる実効増倍率・制御棒価値と、局所的な計算の検証に強く係わる出力分布として最大線出力について比較した。最大線出力については、燃焼組成を列毎の平均として与えたことによる燃焼度との比較は出力ミスマッチファクターとして補正している。

なお、群定数はJFS-3-J2　70群ﾗｲﾌﾞﾗﾘｰ 使用した。

標準炉心体系・燃料組成

↓

ドライバー燃料・特燃タイプ別列平均化組成（支給データ）

中性子スペクトル計算 70g ＲＺモデル（群縮約 7,18群化）

詳細メッシュ・均質組成モデル拡散計算

・制御棒引き抜き状態モデル

・６本制御棒挿入状態モデル

→計算体系　計算体系１は13列、約209cmの範囲

計算体系２は11列、約104cmの範囲

（図3.2-2参照）

---

(7) 吉田匡志、「「常陽」における安全特性試験の予備計算(II)計算検討の使用データの提示」技術課ﾒﾓ-7-187、1996年 3月、「同（その２）」、技術課ﾒﾓ-7-191、1996年 3月

(1) 実効増倍率

絶対値については、表3.2-1 から18群・詳細メッシュ相当の拡散計算では、制御棒引き抜き状態の実効増倍率はk=1.0122と予想される。技-7-191 によるTriangular-XY 2D 計算の制御棒引き抜き状態の実効増倍率はk=1.0109である。

両者の差は約0.1%Δρであり、計算方法に異なる部分もあるものの、従来経験からみて妥当な範囲で一致しているといえる。

(2) 制御棒価値

制御棒価値としてまとめるとつぎのようになる。今回の計算では、すべての計算において、制御棒吸収体領域は均質化されている。

制御棒価値（24mesh/SAモデル計算結果）

項目	7群計算	18群計算
均質拡散計算 %Δρ	13.3	12.8
多群への補正	0.96	1.00
制御棒非均質モデル補正	0.85	0.85
制御棒価値 %Δρ	10.9	10.9

技-7-191 によるTriangular-XY 2D 計算は制御棒価値　11.3%Δρであり、妥当な範囲で一致していると言える。

(3) 最大線出力

18群計算は、燃料領域のみで１４０MWthとしたときに、制御棒引き抜き状態で、401.6W/cm となっている。炉心１列に発生していることは技-7-187と同様である。

技-7-187；最大線出力 414W/cm

比較の条件を一致させるために、出力の規格化の違いを補正する。

本サンプル計算では遮蔽体などの発熱含めていない。炉心部の発熱割合は全体の96%であるので、補正係数0.96となる。

平均組成に対する最大線出力　401.6x0.96～386W/cmとなる。一方、設計解析では、

出力は新燃料に生ずることが考慮されているので、燃焼による出力ミスマッチファクター分を補正する必要がある。

平均組成に対しては新燃料との燃焼度との違い2.5%を考慮する。補正係数は1.025である。

また、本計算は制御棒引き抜き状態の計算であるので、制御棒効果1.03を補正する必要がある。

全体として、本計算結果はつぎのようになる。

401.6x0.96x1.025x1.03=407W/cm

これは、設計解析による評価値414W/cmと約2%で一致している。

表3.2-1　中性子束計算モジュールの検証計算結果（1／2）

(1) 実効増倍率および最大線出力（JFS-3-J2）

ｴﾈﾙｷﾞｰ群数	ﾒｯｼｭ/SA	制御棒状態	計算体系1 K-eff.	計算体系1 Max. Power (W/cm)	計算体系2 K-eff.	計算体系2 Max. Power (W/cm)
7g	6	Rodout	1.01435	392.1	1.00147	396.8
	6	6-CRs-in	0.896767	403.9	0.887330	408.7
					（境界条件の影響の把握）	
7g	24	Rodout	--------	-----	1.00036	401.6
	24	6-CRs-in	--------	-----	0.882968	415.5
18g	6	Rodout	-------	------	1.00059	396.3
	6	6-CRs-in	-------	------	0.890548	406.9
18g	24	Rodout	-------	------	0.999461	399.6
	24	6-CRs-in	-------	------	0.886225	413.9

計算体系１；径方向１３列、軸方向；下方向炉心下端から約64cm位置から、
上方向は炉心上端から、約94cmの範囲。境界条件ｱﾙﾍﾞﾄﾞｾﾞﾛ。

計算体系２；径方向１１列、軸方向；下方向炉心下端から約23cm位置から、
上方向は炉心上端から、約31cmの範囲。境界条件ｱﾙﾍﾞﾄﾞｾﾞﾛ。

表3.2-1　中性子束計算モジュールの検証計算結果（２／２）

(2) 制御棒反応度価値（ %Δρ）

ｴﾈﾙｷﾞｰ群数	ﾒｯｼｭ/SA	計算体系１	計算体系２
7g	6	12.93	12.84
7g	24	-----	13.29
18g	6	-----	12.35
18g	24	-----	12.78

計算体系１；径方向１３列、軸方向；下方向炉心下端から約64cm位置から、
上方向は炉心上端から、約94cmの範囲。境界条件ｱﾙﾍﾞﾄﾞｾﾞﾛ。

計算体系２；径方向１１列、軸方向；下方向炉心下端から約23cm位置から、
上方向は炉心上端から、約31cmの範囲。境界条件ｱﾙﾍﾞﾄﾞｾﾞﾛ。

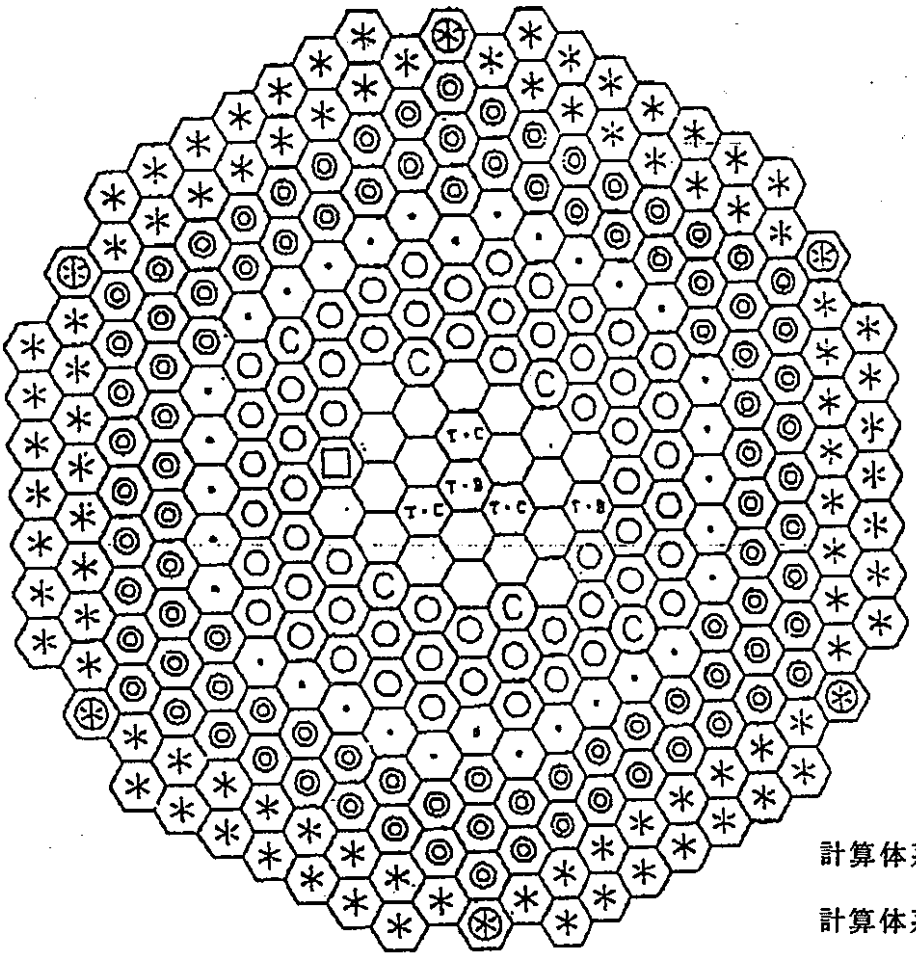

計算体系１は13列、約209cmの範囲

計算体系２は11列、約104cmの範囲

：内側炉心燃料

：外側炉心燃料

：制 御 棒（６体）

：内側反射体

：外側（A）反射体

：中性子遮蔽体（B_4C）

：中性子遮蔽体（B_4C）スリット付き

：特殊燃料集合体・タイプB

：特殊燃料集合体・タイプC

：CMIR

図3.2-1　サンプル計算炉心配置

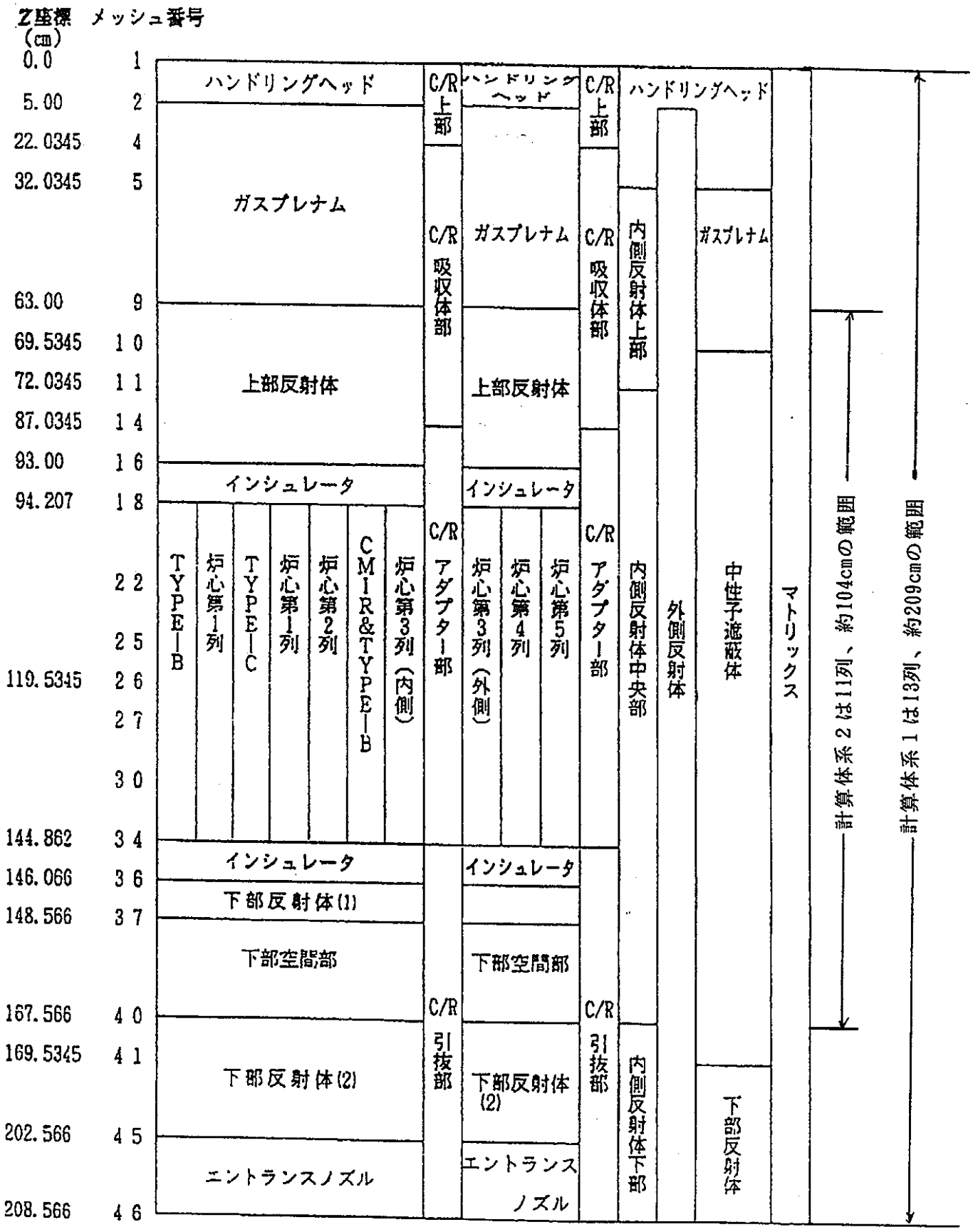

図3.2-2　サンプル計算炉心軸方向モデル図

4. おわりに

「常陽」MK-III炉心における炉心管理手法の高度化および照射条件予測精度の向上に資するために運転監視コードシステムの高度化に関するシステム全体のグランドデザインおよび中性子束分布計算モジュールの作成を行った。

システムのグランドデザインでは、新システムの機能は原子炉運転前の予測計算と原子炉運転後の記録計算の二機能とすることおよび必要なシステム構成の概要を決定した。MK-IIIは炉心現行炉心から出力増大・二領域化等の変更があるので、予測計算では従来よりも事前安全確認用の出力分布の評価機能を拡充する予定である。

全体のグランドデザインにより、今後の開発・修正・整備の全体概要が明確になった。システム全体では図4.1 のようになる。

中性子束計算モジュールは照射場の核計算精度向上のために採用する燃料集合体あたり径方向に24メッシュとする分割詳細化とエネルギー群数の18群化を実現するために、有限差分３次元Tri-Z(24ﾒｯｼｭ/SA)拡散手法を用いて作成した。

MK-III炉心の全炉心体系で集合体あたり24ﾒｯｼｭ・軸方向ノード数22・ｴﾈﾙｷﾞｰ群数18とするサンプル計算を行い、結果の妥当性を確認した。

今後は、予測計算における安全性確認計算結果の評価方法の確立と、作成した中性子計算モジュールの計算結果を利用して具体化を図ることが必要である。更にシステム高度化のためにシステム作成に向けてシステムフロー制御、定数の作成、各種特性計算モジュールとＩＯ部分を作成していく必要がある。

また、中性子束計算モジュールのサンプル計算を通して、このような多数の空間・エネルギー点数を有する炉心の拡散計算の実用規模運用経験が大洗工学センターの大型計算機システムにおいて得られた。

この経験では、全炉心モデル化により非常に大きなコアを必要とする。今後、このモジュールの計算効率の向上のために、少ないメモリーでも計算できるようにすること、また中性子束の guessの利用など計算効率向上のための改良、修正が今後も必要でり、使いやすいものとすることが重要である。本格運用に向けて、使いやすい運転監視コードとするための計算機環境整備も必要と考えられる。

システム概要

－－基本構成は現行ＭＡＧＩと同様とする。

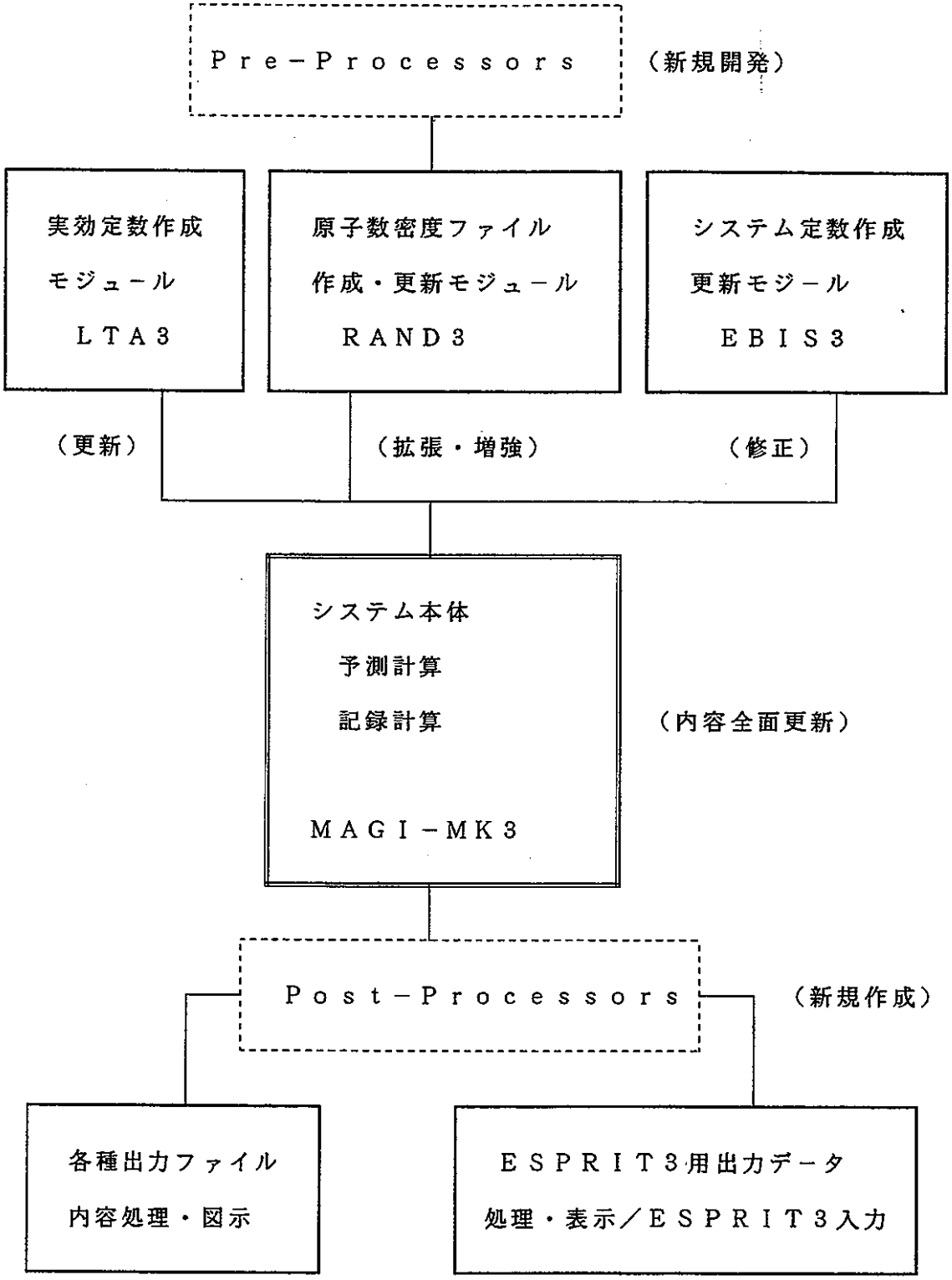

図4.1-1　システム開発概略案

付録1　現行MAGIシステム機能と関連ファイル

機能1.　炉内に装荷予定の特殊燃料集合体に関する組成，装荷位置等のサーベイ計算を行なう段階 ……→ サーベイ計算と呼ぶ。

機能2.　サーベイ計算の結果を反映して決められた特殊燃料集合体とドライバー燃料の相互関連を考慮した炉心全体の核熱特性計算を行ない，安全性の確認を行なう段階 ……→ 設計計算と呼ぶ。

機能3.　原子炉の運転実績を反映した記録計算（機能4）結果を出発点として，次に行なわれる運転予定の確認のための核熱特性計算と安全性の確認を行なう段階 ……→ 予測計算と呼ぶ。

機能4.　原子炉の運転記録データと，前サイクルまでの特性計算結果を反映して，当該サイクルの核熱特性計算を行ない，必要な特性データを保存用ファイルに格納する段階 ……→ 記録計算と呼ぶ。

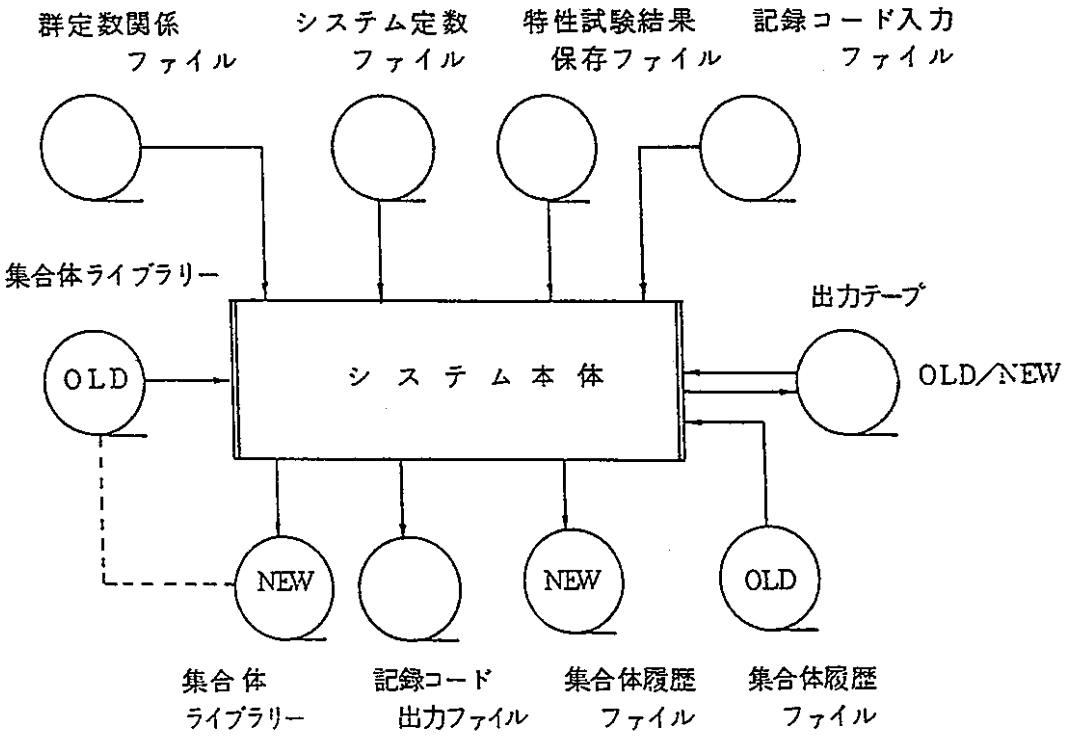

Basic　I/O　Relationship of the System

予測計算

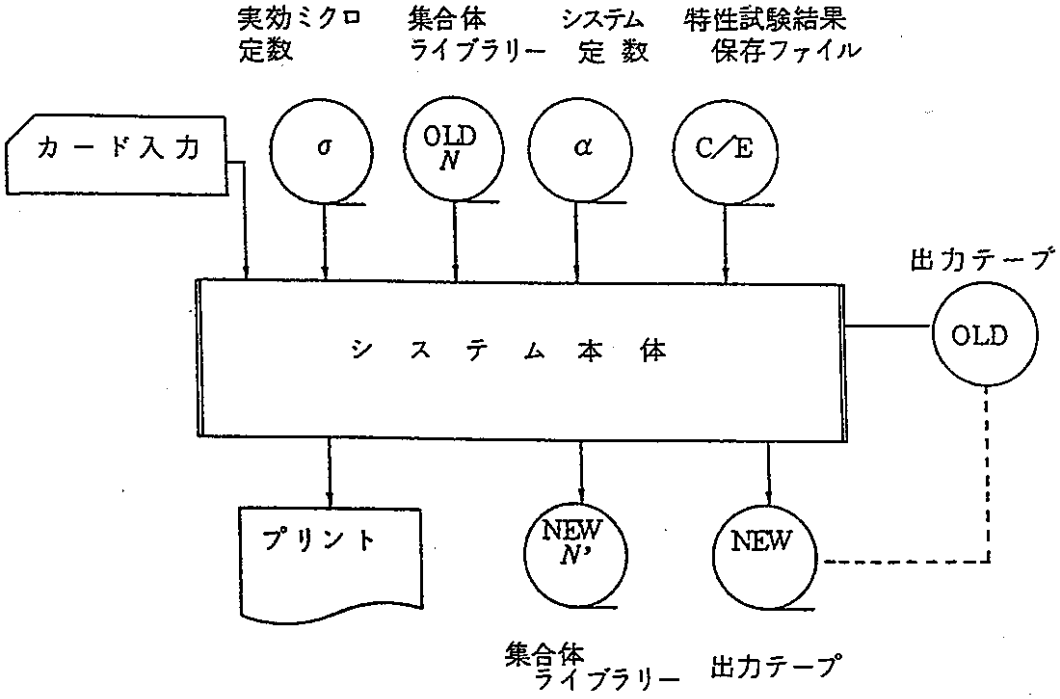
実効ミクロ
定数
集合体
ライブラリー
システム
定 数
特性試験結果
保存ファイル
カード入力
σ
OLD
N
α
C/E
出力テープ
OLD
システム本体
プリント
NEW
N'
NEW
集合体
ライブラリー
出力テープ

記録計算

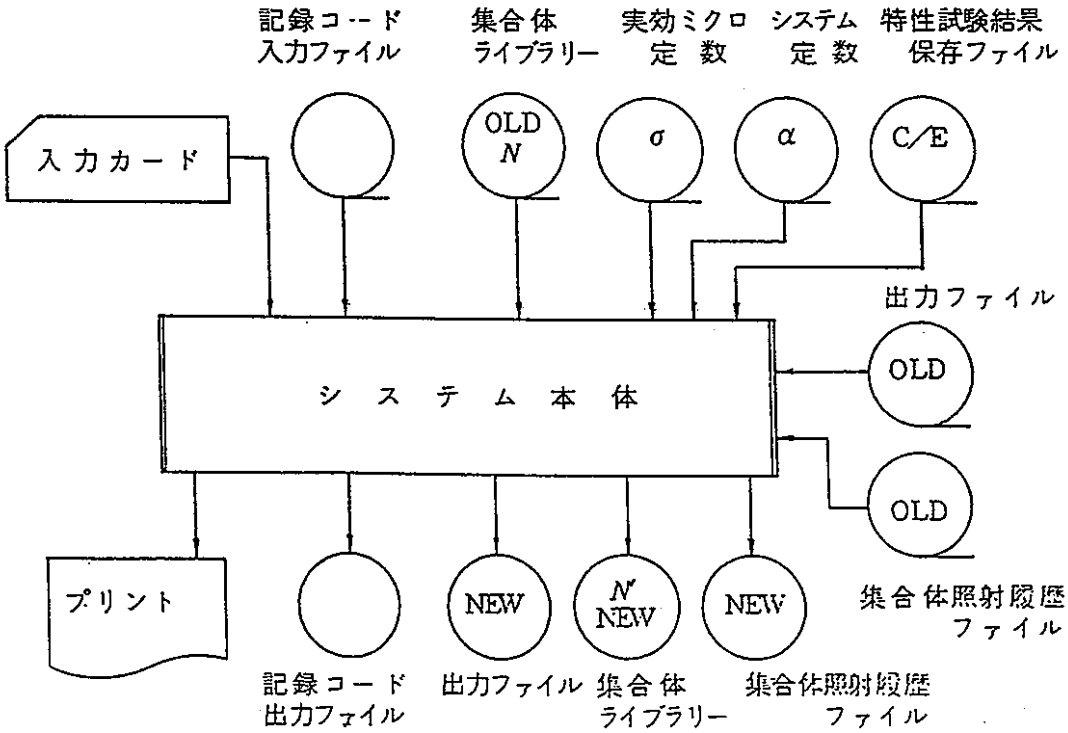
記録コード
入力ファイル
集合体
ライブラリー
実効ミクロ
定 数
システム
定 数
特性試験結果
保存ファイル
入力カード
OLD
N
σ
α
C/E
出力ファイル
OLD
システム本体
OLD
プリント
NEW
N'
NEW
NEW
集合体照射履歴
ファイル
記録コード
出力ファイル
出力ファイル
集合体
ライブラリー
集合体照射履歴
ファイル

主要な入出力ファイル

次に，本システムにおいて基本となるＩ／Ｏ　Fileの役割と概要をまとめておく。

実効ミクロ定数ファイル

「常陽」ＭＫ－Ⅱ体系で使用するいくつかの代表的な均質組成に対して自己遮蔽因子が計算されたミクロ定数を格納する。その他にガンマ発生，ガンマ輸送定数と発熱計算に必要な諸定数及び縮約に用いるスペクトルデータを内蔵している。中性子，ガンマ線のいずれに対しても縮約前の多群のままである。これは，補助コードＭＡＧＩ－ＬＴＡで予め作成しておく。

集合体ライブラリーファイル

原子炉に装荷される集合体毎の組成データを中心に，炉心構成要素別に分類格納しておく。（記録・予測計算時には燃焼計算結果を反映して作り変える。その時にはＯＬＤ　File ／ＮＥＷ　Fileが必要）このファイルは補助コード“ＲＡＮＡ８０”ではじめに作成する。

システム定数ファイル

群定数以外に「常陽」ＭＫ－Ⅱ炉心にほぼ固有と見做せる諸定数，特性値をあるパラメータの関数として扱う場合の係数等のデータを格納し，システム本体にとっては常に入力として扱う。このファイルは補助コード“ＥＢＩＳ１８”によって予め作成しておく。

出力ファイル

予測・記録・設計計算によって得られた炉心核熱の特性値を記録・格納する。このファイルは，サーベイ計算の段階で入出力ファイルとしても使用される。必要に応じてOLD／NEWの２つのファイルを用いる。それ以外の計算ルートではオプションによって中性子束分布等のｇｕｅｓｓを与えるためにも使用される。

特性試験結果保存ファイル

ＭＫ－Ⅱ炉心の核熱特性に関する性能試験結果および対応する計算結果（実験体系における結果）を記録保存し，実測値をベースとし，諸特性の予測精度の向上に反映するために用い，常に入力として扱われる。（このファイルの作成に関しては，現状でFormat，反映項目，方法が詰められていない。）

集合体照射履歴ファイル（Historyファイル）

記録計算の結果求められた集合体毎の照射履歴を格納する。集合体毎に炉内で経験した全部の履歴を中性子束レベル等の炉物理パラメータとともに保存しておく。この結果をもとに集合体毎の追跡計算が可能となる。ＯＬＤ　File／ＮＥＷ　Fileが常に必要となる。

記録コード入力ファイル

当該サイクルの原子炉の運転実績が記録されており，記録計算のための入力となる。

記録コード出力ファイル

記録計算結果を記録コード用データとして格納したものである。

特殊燃料集合体熱特性計算用出力ファイル

このファイルは，このシステムを設計計算として使用する場合に使用者の入力オプションに従って作成される。このファイルの目的は，特殊燃料集合体Ａ，Ｂ，Ｃ型の照射仕様設定システム（ＥＳＰＲＩＴ）で行なう，詳細熱流力特性計算のために必要な集合体毎の照射履歴を格納しておく。本システムでは，熱特性計算のうち特殊燃料集合体，材料照射用集合体内の熱流力計算は対象としていない。

付録2　常陽炉心に於けるガンマ線スペクトルの例

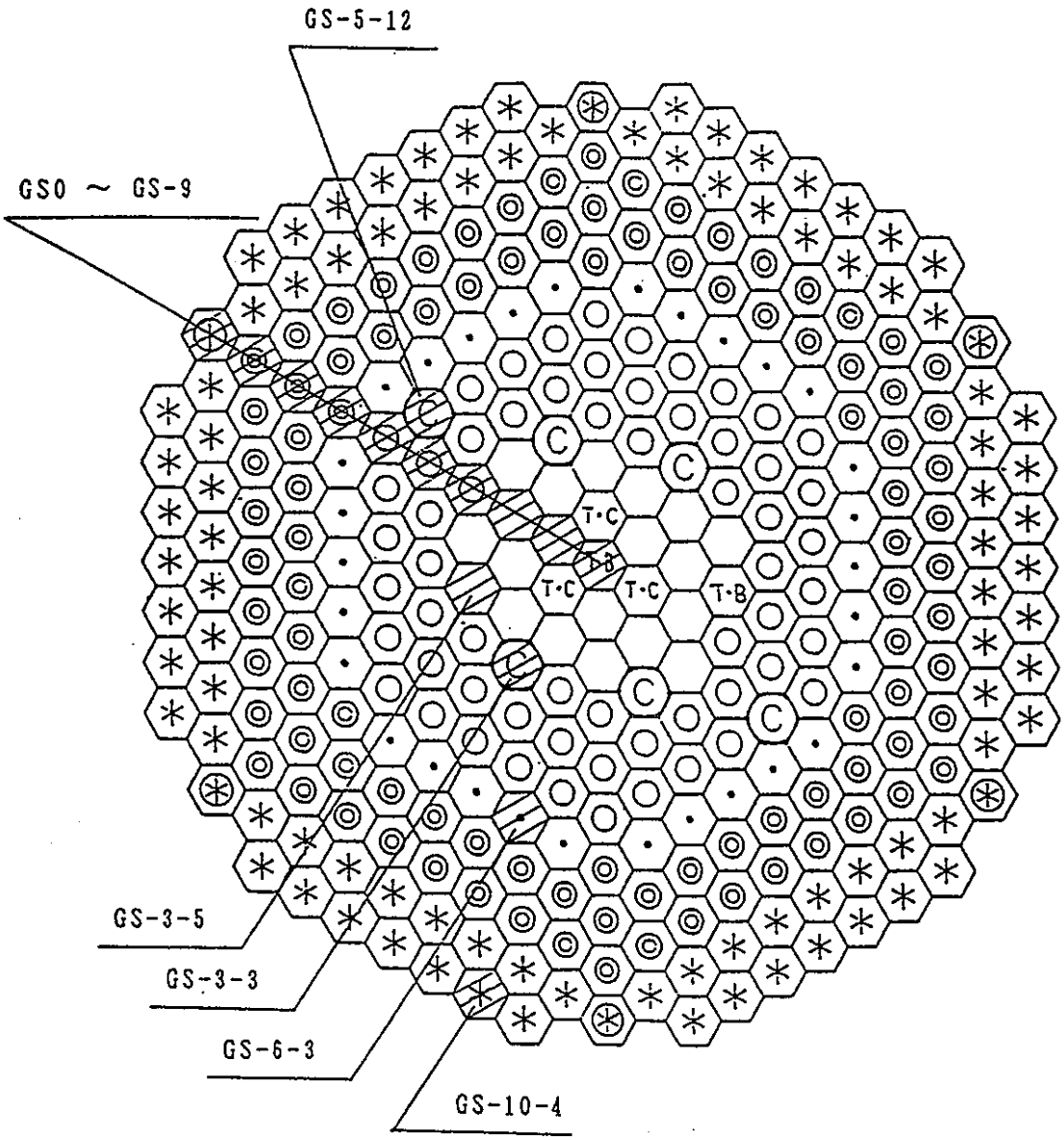

：内側炉心燃料

：外側炉心燃料

：制 御 棒（6体）

：内側反射体

：外側（A）反射体

：中性子遮蔽体（B_4C）

：中性子遮蔽体（B_4C）スリット付き

：特殊燃料集合体・タイプB

：特殊燃料集合体・タイプC

図　　ガンマ発生量20群スペクトルデータ表示位置の図

表　MK-Ⅲ標準炉心の代表的位置におけるγ線スペクトル

エネルギー群	γ線エネルギー[eV]		γ線束[γ/cm2/s]			
	上限	下限	炉心燃料	内側反射体	外側反射体	遮へい集合体
1	1.40E+07	1.20E+07	2.55E+05	1.12E+05	2.48E+04	3.92E+04
2	1.20E+07	1.00E+07	9.63E+09	1.33E+10	4.17E+09	5.75E+08
3	1.00E+07	8.00E+06	1.82E+12	4.85E+12	3.08E+12	4.97E+11
4	8.00E+06	6.50E+06	3.49E+12	6.39E+12	4.14E+12	6.84E+11
5	6.50E+06	5.00E+06	9.76E+12	4.64E+12	2.57E+12	4.59E+11
6	5.00E+06	4.00E+06	1.96E+13	4.60E+12	1.89E+12	3.54E+11
7	4.00E+06	3.00E+06	5.74E+13	1.04E+13	3.19E+12	5.61E+11
8	3.00E+06	2.50E+06	6.38E+13	9.59E+12	2.42E+12	4.05E+11
9	2.50E+06	2.00E+06	1.03E+14	1.43E+13	3.16E+12	5.07E+11
10	2.00E+06	1.66E+06	1.00E+14	1.35E+13	2.68E+12	4.19E+11
11	1.66E+06	1.33E+06	1.58E+14	2.24E+13	3.97E+12	5.70E+11
12	1.33E+06	1.00E+06	2.07E+14	2.72E+13	4.45E+12	6.74E+11
13	1.00E+06	8.00E+05	1.97E+14	3.49E+13	6.81E+12	9.69E+11
14	8.00E+05	6.00E+05	2.15E+14	3.10E+13	5.42E+12	8.70E+11
15	6.00E+05	4.00E+05	2.31E+14	4.63E+13	1.09E+13	3.03E+13
16	4.00E+05	3.00E+05	8.87E+13	3.20E+13	7.60E+12	7.80E+12
17	3.00E+05	2.00E+05	6.09E+13	4.95E+13	1.20E+13	1.26E+13
18	2.00E+05	1.00E+05	1.27E+13	4.93E+13	1.28E+13	2.04E+13
19	1.00E+05	5.00E+04	1.95E+12	2.86E+12	7.36E+11	2.27E+12
20	5.00E+04	2.00E+04	4.49E+11	2.38E+10	9.38E+09	1.70E+10

計算体系：MK-Ⅲ標準炉心の径方向一次元体系
断面積：中性子断面積　　JSDJ2/JFTJ2を使用（100群）
　　γ線輸送断面積　　GAMLEG-JRにより20群断面積を作成
　　γ線生成断面積　　遅発核分裂γ線を考慮した修正"New-POPOP4"を用いて作成
コード："ANISN-ORNL"
輸送近似：P3S8

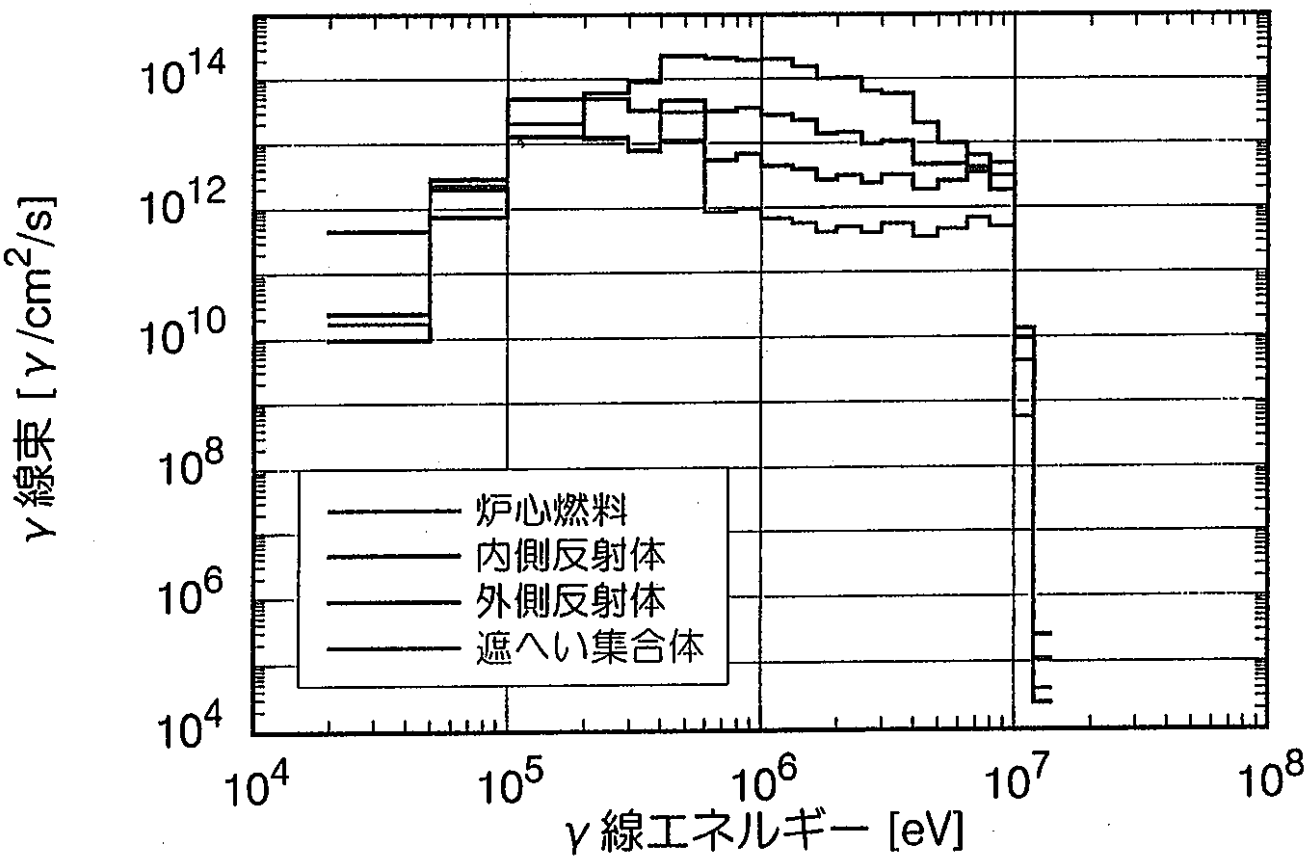

図　MK-Ⅲ標準炉心の代表的位置におけるγ線スペクトル

付録3　中性子束計算モジュール概要説明書

本計算コードは、下記のモジュールから構成される。（約１４、０００ステップ）

サブルーチン	：	１０８
ファンクション	：	９
ｍａｉｎおよびｂｌｏｃｋｄａｔａ	：	２

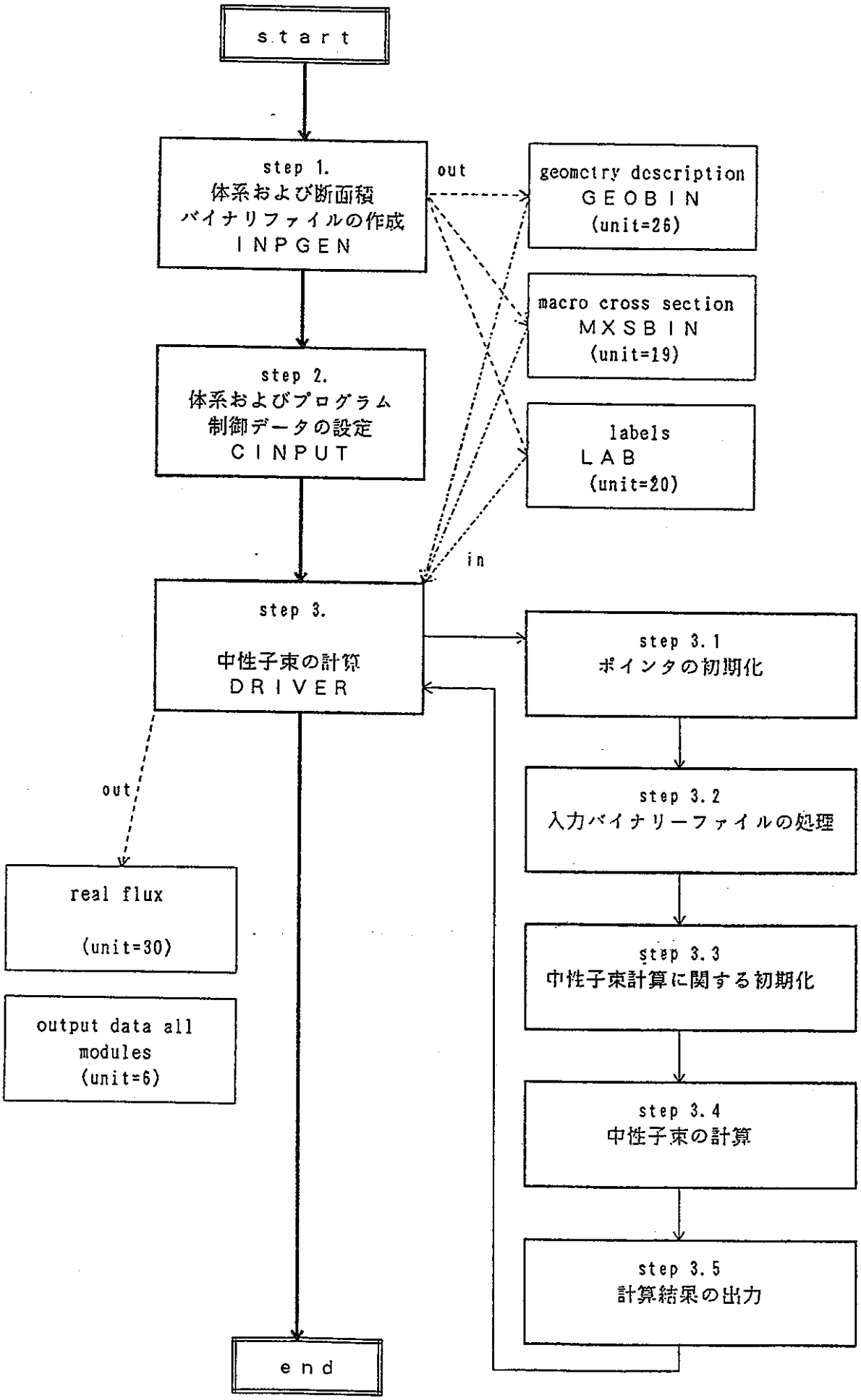
start
step 1.
体系および断面積
バイナリファイルの作成
INPGEN
out
geometry description
GEOBIN
(unit=26)
macro cross section
MXSBIN
(unit=19)
labels
LAB
(unit=20)
step 2.
体系およびプログラム
制御データの設定
CINPUT
in
step 3.
中性子束の計算
DRIVER
step 3.1
ポインタの初期化
step 3.2
入力バイナリーファイルの処理
step 3.3
中性子束計算に関する初期化
step 3.4
中性子束の計算
step 3.5
計算結果の出力
out
real flux
(unit=30)
output data all
modules
(unit=6)
end

２．２　入出力ファイルについて

本計算コードの入出力ファイルについて、入出力機番と内容について表２．２．１に示す。

表２．２．１　入出力ファイル

入出力機番	内　容	備　考
５	入力データファイル	
６	標準出力リスト	
１９	マクロ断面積データバイナリファイル	
２０	ラベル、領域の定義データバイナリファイル	
２６	体系データバイナリファイル	
３０	中性子線束データバイナリファイル	
41,42,45,48,49,53	スクラッチファイル	

入力データについて

［１］ 入力データの概要

本コードの入力データはネームリスト形式と通常のフォーマット形式の両方を使用する。
ネームリスト形式のデータ以外は幾つかのブロックに分けられており、それぞれのブロックは何回現れてもよい。
また、タイトルおよびコントロールデータのネームリスト以外は、すべて順不同でどういう順番で入力されていてもかまわない。

各ブロックの書式は「左側のデータ（以後、左辺値という）に右側のデータ（以後、右辺値という）を割り当てる」点で共通している。同一の左辺値が複数回現れる場合は、最後の定義が優先される。ブロックの形式は、次のとおり。

```
+-------------------------------------------------------------+
|                                                             |
|  ....+....1....+....2....+....3....+....4....+ <== カラム    |
|  *[ブロック識別カード] ... 必ず1カラム目からはじめる          |
|                                                             |
|        後述するようにブロック内の一般的な形式は  '(7a10)'    |
|        であるが、右詰め、左づめ等の制約はなく10カラム中の    |
|        どこに位置していても、正常に認識される。              |
|                                                             |
|  *end-block ...  ブロックの終了を示す識別カード              |
|                  ブロック識別カード同様必ず1カラム目から。   |
|                                                             |
+-------------------------------------------------------------+
```

図　　：ブロックの書式について

入力データの全体構成図を示す。

```
+-----------------------------------------------------------+
| タイトル (80文字以内、1行)                                  |
+-----------------------------------------------------------+
| $control : コントロールデータ (namelist)                    |
+-----------------------------------------------------------+
| *material ブロック :                                        |
|        物質領域へのisotope情報の割り当て(format形式)        |
+-----------------------------------------------------------+
| *subassembly ブロック :                                     |
|        集合体内の物質領域の割り当て(format形式)             |
+-----------------------------------------------------------+
| *distribution ブロック :                                    |
|        集合体配置情報 (format形式)                          |
+-----------------------------------------------------------+
| *special ブロック :                                         |
|        特殊燃料集合体設定用ブロック (format形式)            |
|        上記の*subassemble ブロックは自動的に集合体の        |
|        同一プレーン内全体についての設定をおこなう          |
|        ため、プレーン内の個々のセルについて設定する場       |
|        合に使用する。                                       |
+-----------------------------------------------------------+
| $isoinfo : isotope 共通情報 (namelist)                      |
|                        ----------------+                   |
| $isocomp : isotype 個別情報            |                   |
|                        ----------------+                   |
|                        nregn回くり返し                      |
+-----------------------------------------------------------+
```

図　　:入力データの全体構成図

[2] で各ネームリストおよび、ブロックの入力について詳述する。

[2] 入力データ一覧

2.1 $control : コントロールデータ (namelist形式)

表2.2.1:$control 入力データ一覧表

変数名	内容	備考
nring	集合体リング数	
ndivs	集合体内のメッシュ分割数 =1 : 6メッシュ =2 : 24メッシュ	
nxcmp	軸方向物質領域分割数	
ndivx(j)	軸方向各物質領域内のメッシュ数	
hgtop(j)	軸方向各物質領域の上端位置 (1≦j≦nxcmp、トータルで60メッシュ以内) ndivx,hgtopの入力は下から指定するものとする	[cm]
pitch	集合体配列ピッチ	[cm]

2.2 *material : 物質領域へのisotope情報の割り当て (format形式)

(a) format : a10, a10
(b) 内容 : [物質領域名] [isotope名]
(c) 例 :

```
+-----------------------------------------------------------------+
|  ....+....1....+....2....+....3....+....4....+ <== カラム        |
|  *material                                                      |
|      kdfuel    fhet7g          # (1)                            |
|       krref      rref          # (2)                            |
|    kdfuel   fhet7g             # (3)                            |
|  *end-block                                                     |
+-----------------------------------------------------------------+
```

前節の説明のように10カラム内であればどこに記述されていてもよいことから上記の(1)と(3)は同じ意味となる。

2.3 *subassembly : 集合体内の物質領域の割り当て (format形式)

(a) format : a10, 6a10
(b) 内容 : [集合体名] ([物質領域名] nxcmp個入力 (下からの指定)
(c) 例 :

```
+-----------------------------------------------------------------+
|  ....+....1....+....2....+....3....+....4....+ <== カラム        |
|  *subassembly                                                   |
|      sdfuel       kna     karef    kdfucl     karef   # (4)    |
|      sgapss    kgapss    kgapss    kgapss    kgapss   # (5)    |
|  *end-block                                                     |
+-----------------------------------------------------------------+
```

上記の例の場合、軸方向の物質領域数は4である。(nxcmp)
右辺値である物質領域名は前述の*materialブロックで必ず左辺値に登場していなければならない。また、右辺値の数はnxcmpと一致しなければならない。

2.4 *distribution : 集合体配置情報 (format形式)

(a) format :　　a10,　　a10
(b) 内容　: [集合体配置位置名] [集合体名]
(c) 例 :

```
+-------------------------------------------------------------+
|  ....+....1....+....2....+....3....+....4....+ <== カラム    |
|  *distribution                                              |
|        00 0    sfbrss        # (6)                          |
|        1a 1   sgapss         # (7)                          |
|      2b 1      sdfuel        # (8)                          |
|    1a1       sfbrss          # (9)                          |
|  *end-block                                                 |
+-------------------------------------------------------------+
```

上記の(6)から(9)はすべて正常に認識される。集合体配置名中の空白は無視するため、上記の(6)と(9)の左辺値は同一とみなされる。したがって、例の場合(6)は(9)によって書き換えられる。
また、2.3と同様に右辺値である集合体名は前述の*subassembleブロックの左辺値に記述されていなければならない。

2.5 *special :特殊燃料集合体設定用ブロック (format形式)

(a) format :　　a10,　　a10,
(b) 内容　: [物質領域名1] [物質領域名2]
(a) format :　　24i3
(b) 内容　: [集合体内メッシュ番号]
(c) 例 :

```
+-------------------------------------------------------------+
|  ....+....1....+....2....+....3....+....4....+ <== カラム    |
|  *special                                                   |
|      karefa    karef1                        # (10)         |
|    1  2  3  4  5  6                                         |
|  *end-block                                                 |
+-------------------------------------------------------------+
```

このブロックは集合体内の各メッシュ毎に別の物質を配置する場合に使用する。
物質領域名1、物質領域名2はともに前述の*materialブロックの左辺値になっている必要がある。集合体内メッシュ番号は物質領域名2に属することを示す。
また、物質領域名1,2の関係は以下に示すように物質領域名2が物質領域名1の一部を占め、*special ブロックで指定されていないメッシュ番号は物質領域1に属することを意味している。

```
+-------------------------------------------------------------+
| < 物質領域1と物質領域2の関係 >                               |
|                                                             |
|        [物質領域名1] -+-- [物質領域名2] (1,2,3,4,5,6)        |
|                       |                                     |
|                       +-- [物質領域名1] 残り(7,8,....,23,24) |
+-------------------------------------------------------------+
```

集合体内のメッシュ番号は以下のように決められており、該当するメッシュ番号を入力する。

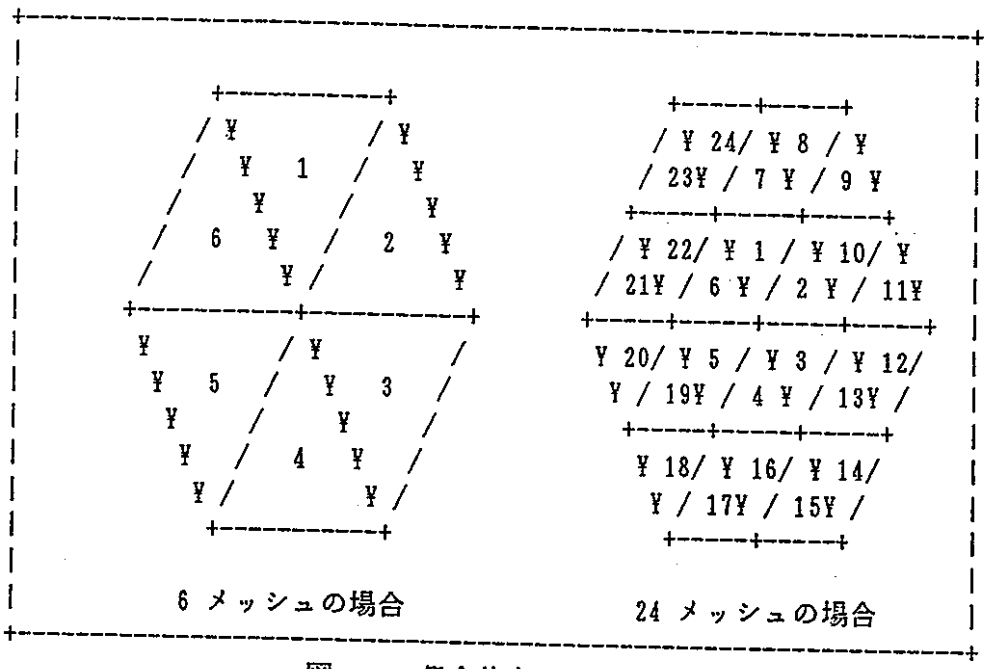

図　　:集合体内メッシュ分割図

2.5 $isoinfo : isotope 共通情報 (namelist)

表　　$isoinfo 入力データ一覧表

変数名	内容	備考
ncomp	isotopeグループの数	
ngroup	エネルギー群数	
ifiss(j)	核分裂性のisotopeグループか否かのフラグ =0 : 核分裂性ではない =1 : 核分裂性である (1 ≦ j ≦ ncomp)	
isn2n(j)	(n, 2n)反応断面積が存在するか否かのフラグ =0 : 存在しない =1 : 存在する (1 ≦ j ≦ ncomp)	
chi(j)	即発核分裂割合 (1 ≦ j ≦ ngroup)	[-]
vel(j)	中性子の平均速度 (1 ≦ j ≦ ngroup)	[cm/s]
emax(j)	エネルギー郡 j のエネルギーバンド最大値	[eV]
emin	エネルギーバンド最小値	[eV]

2.6 $isocomp : isocomp 個別情報 (namelist)

表　　$isocomp 入力データ一覧表

変数名	内容	備考
namiso	isotope 識別名 (a6)	
sigc(j)	捕獲断面積 ((n, γ)反応) (1 ≦ j ≦ ngroup)	[barn]
sigf(j)	核分裂断面積 (1 ≦ j ≦ ngroup)	[barn]
totpl(j)	全断面積 (1 ≦ j ≦ ngroup)	[barn]
strpl(j)	輸送断面積 (1 ≦ j ≦ ngroup)	[barn]
totnu(j)	total neutron yield/fission	
sn2n(j)	(n, 2n)反応断面積 (1 ≦ j ≦ ngroup)	[barn]
scatt(j, i)	弾性散乱断面積 (j -> i) (1 ≦ j ≦ i-1, 1 ≦ i ≦ ngroup)	[barn]

$isocompはisotopeグループ分存在しなければならない。

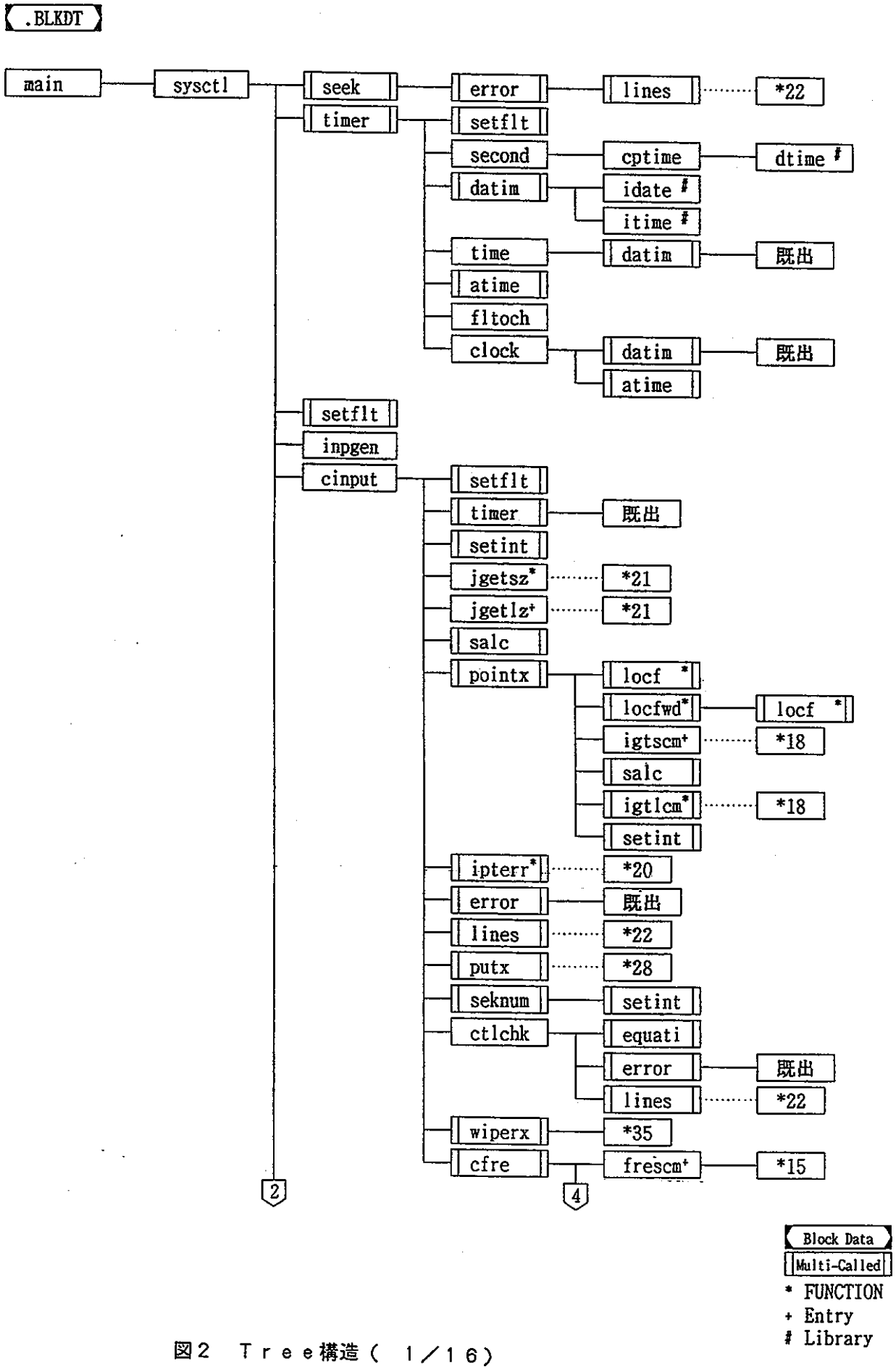

図2　Ｔｒｅｅ構造（　１／１６）

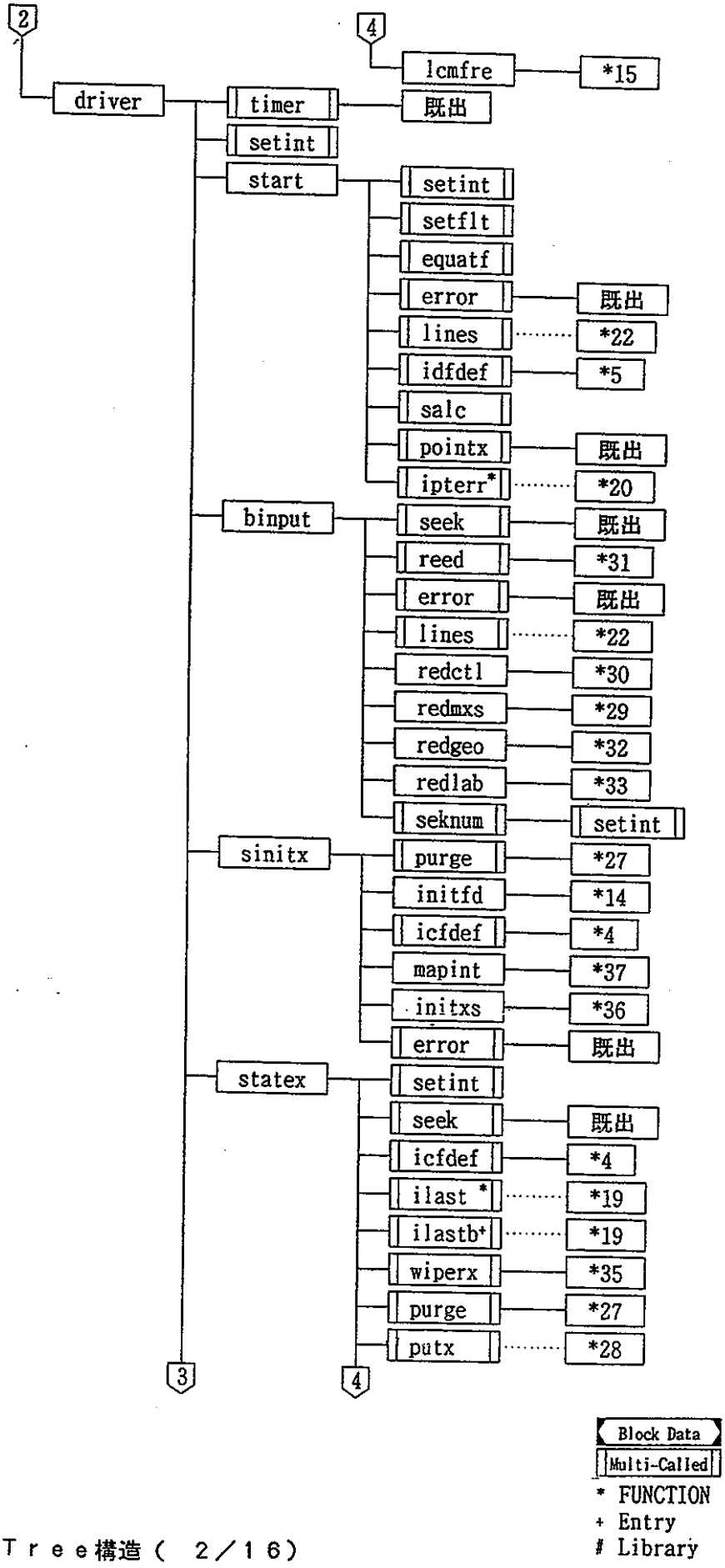

図2　Ｔｒｅｅ構造（　２／１６）

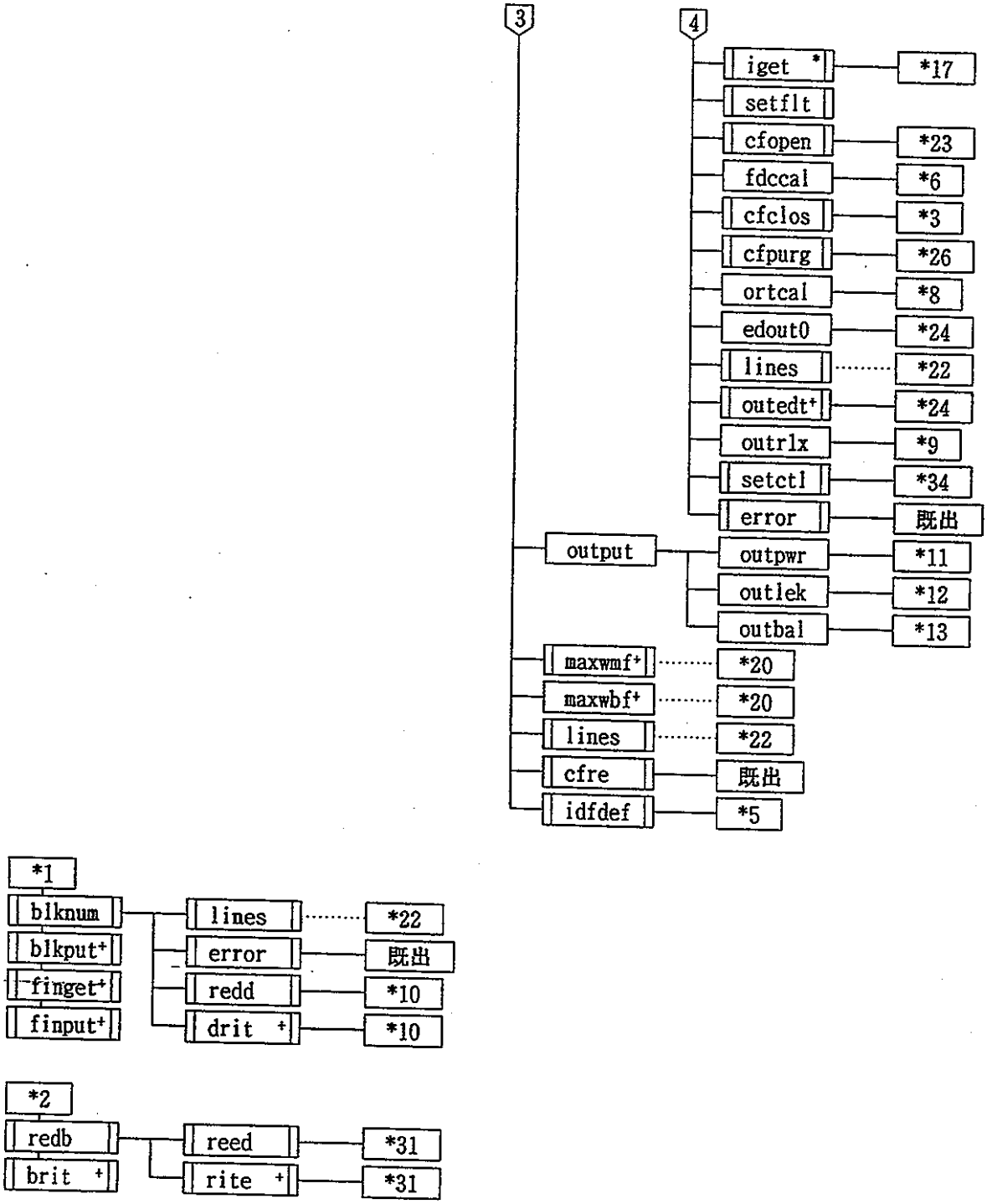

Block Data
Multi-Called
* FUNCTION
+ Entry
# Library

図２　Ｔｒｅｅ構造（　３／１６）

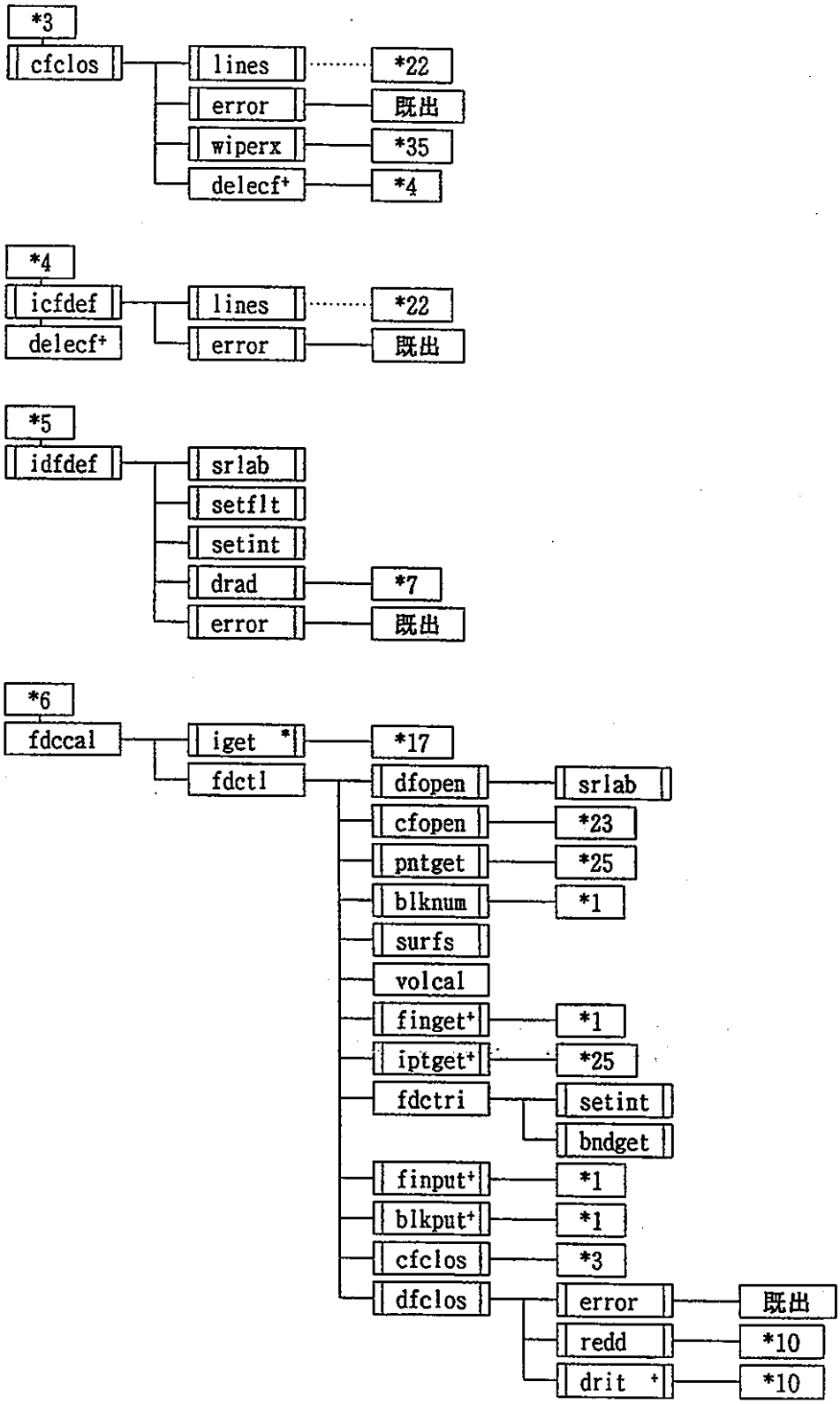

Block Data
Multi-Called
* FUNCTION
+ Entry
# Library

図２　Ｔｒｅｅ構造（　４／１６）

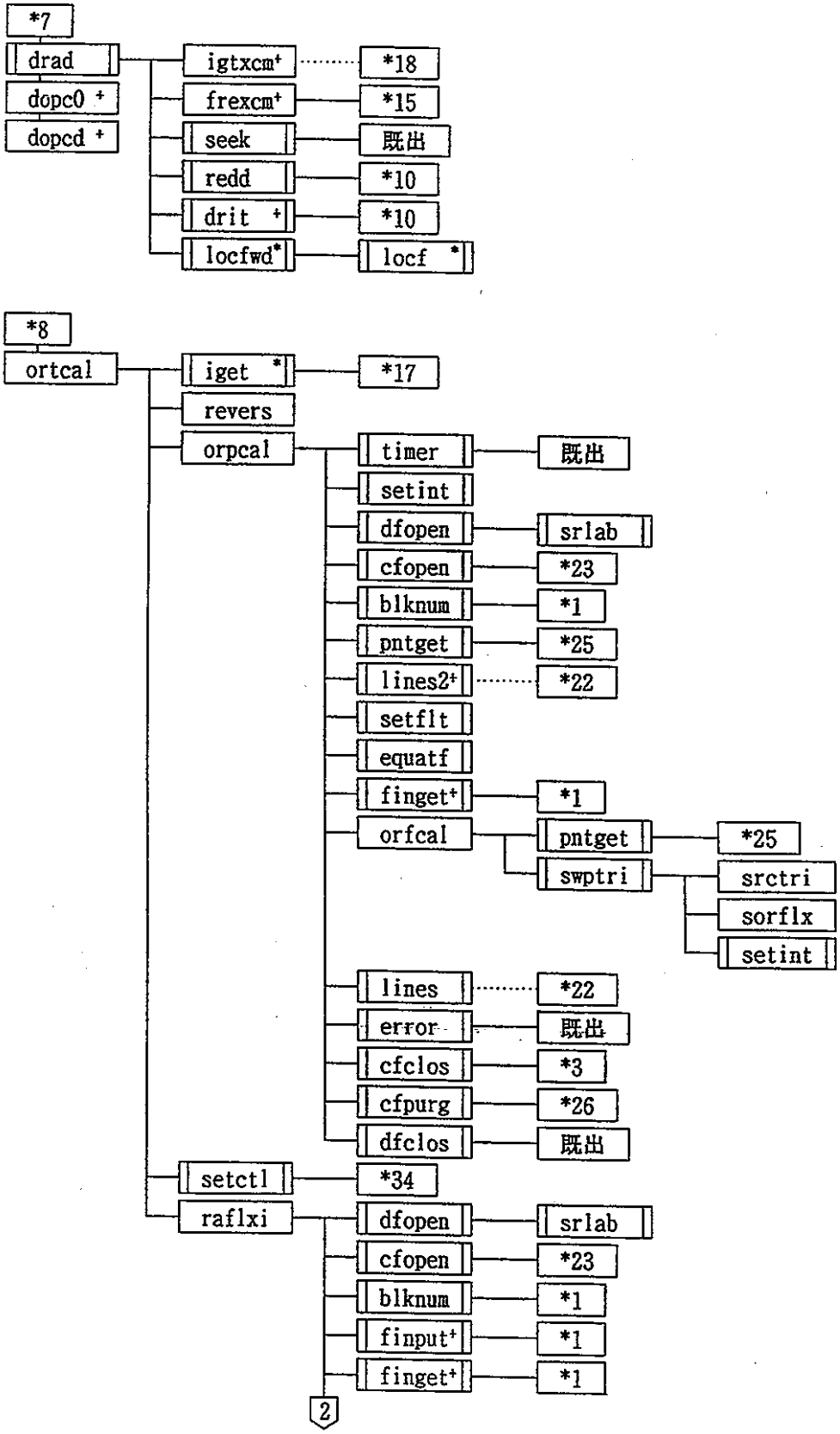

Block Data
Multi-Called
* FUNCTION
+ Entry
# Library

図2　Ｔｒｅｅ構造（　５／１６）

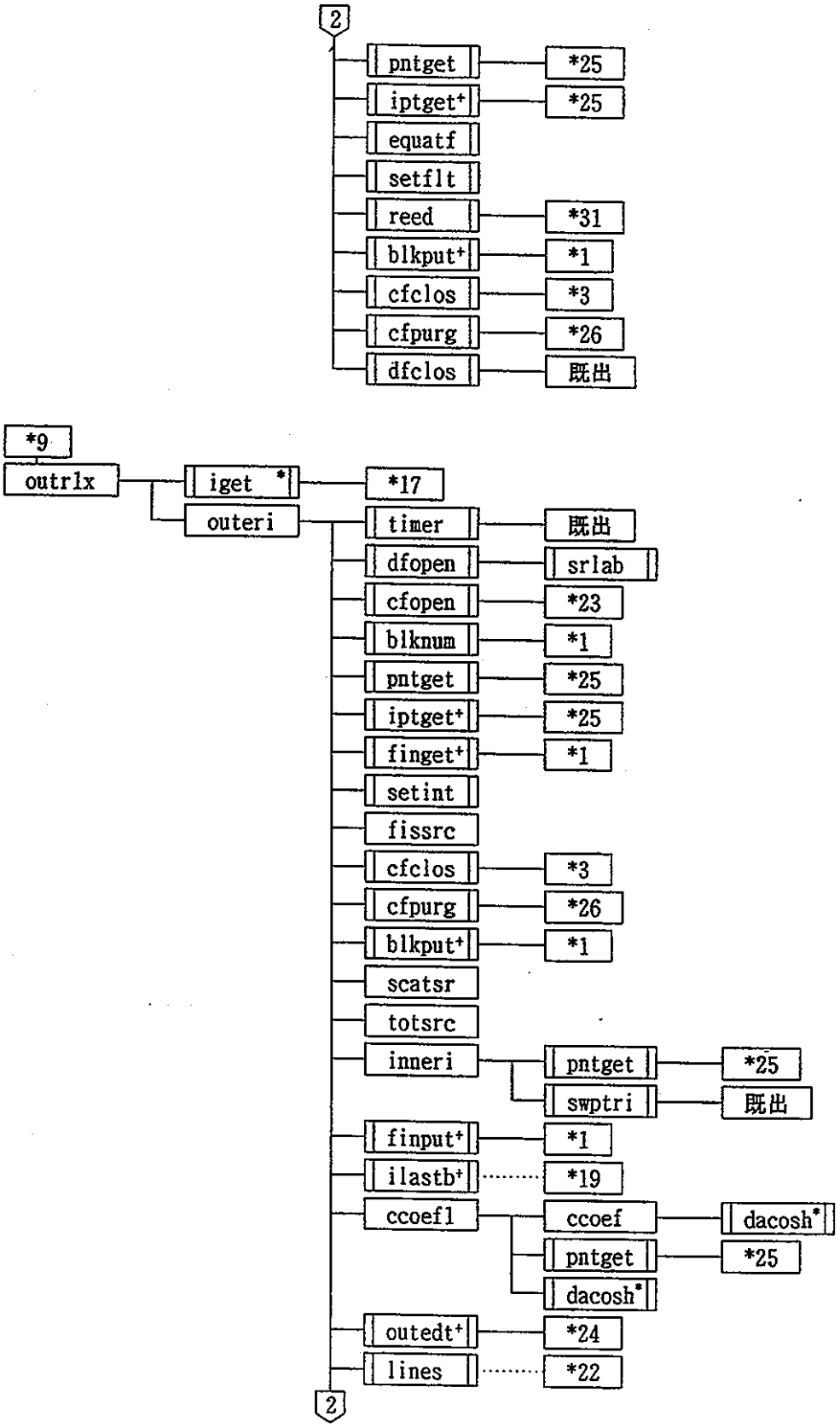

Block Data
Multi-Called
* FUNCTION
+ Entry
# Library

図２　Ｔｒｅｅ構造（　６／１６）

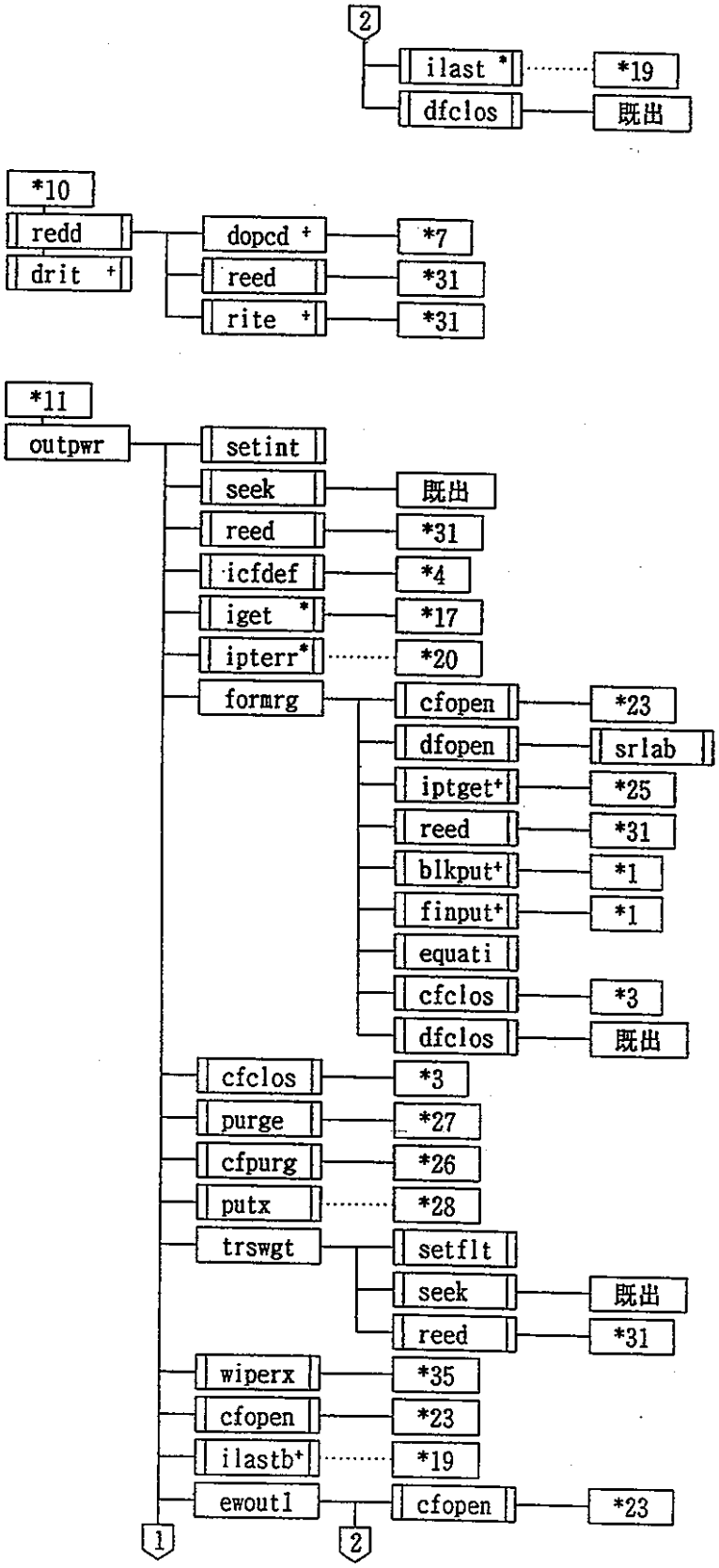

Block Data
Multi-Called
* FUNCTION
+ Entry
# Library

図２　Ｔｒｅｅ構造（　７／１６）

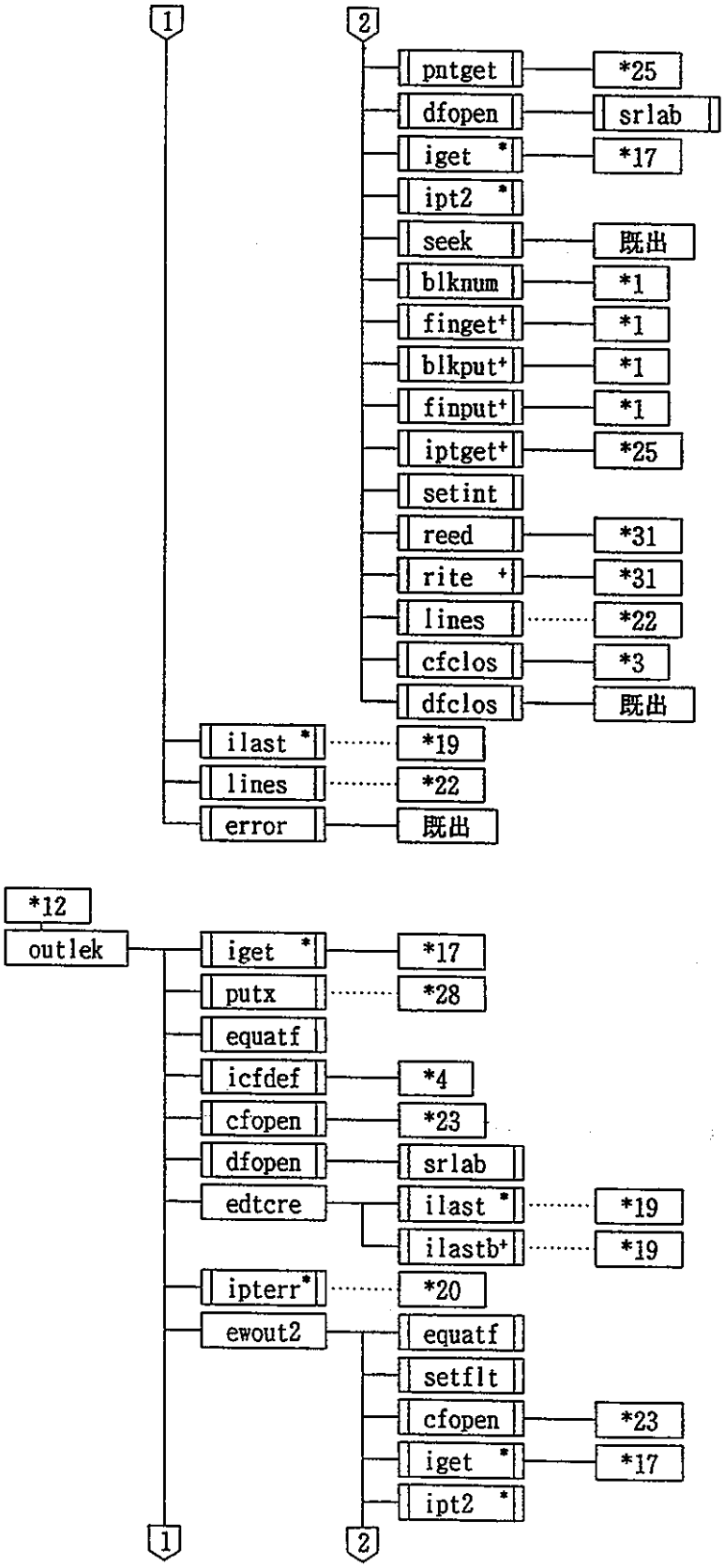

Block Data
Multi-Called
* FUNCTION
+ Entry
# Library

図2　Ｔｒｅｅ構造（　８／１６）

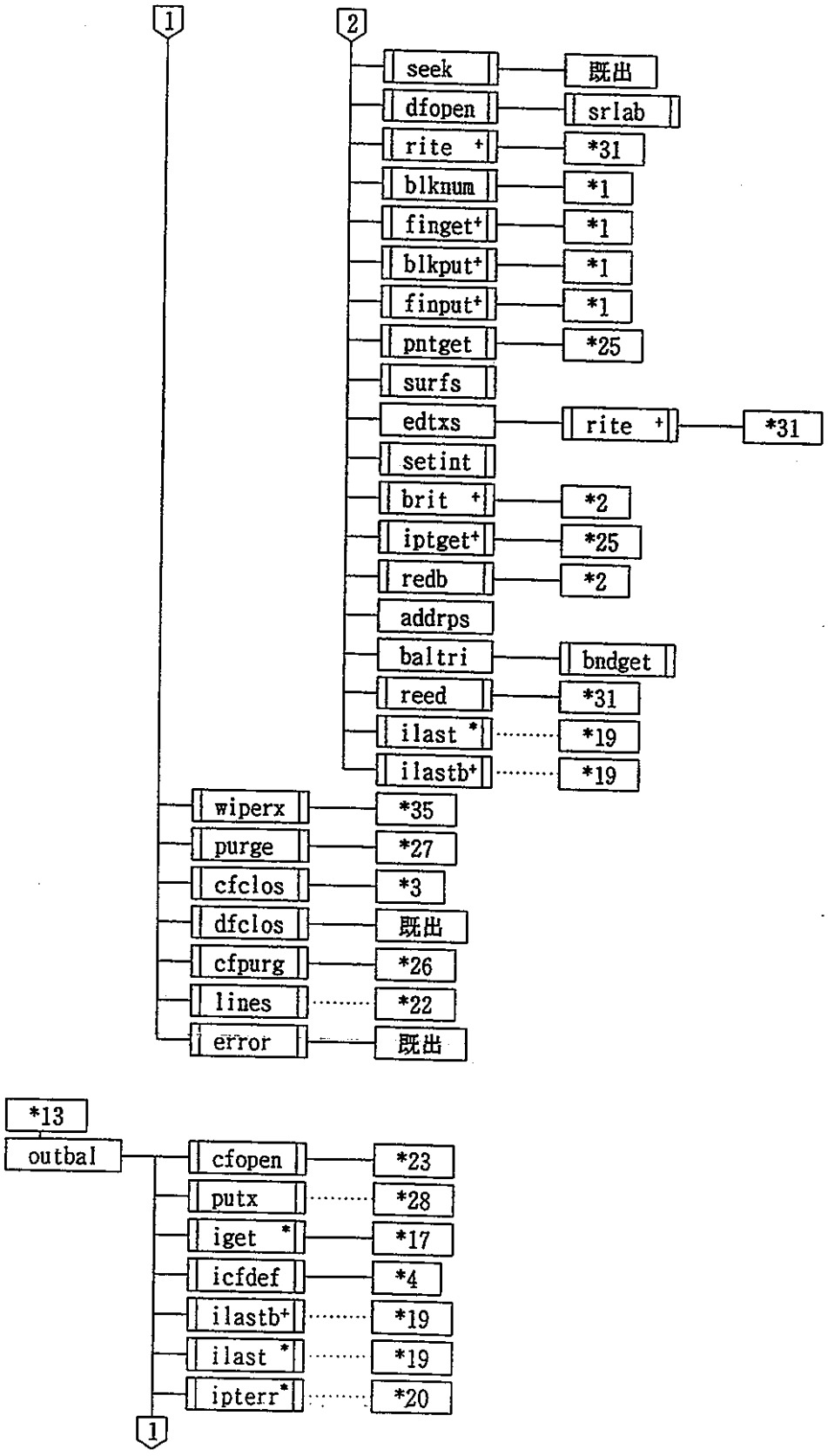

Block Data
Multi-Called
* FUNCTION
+ Entry
# Library

図2　Ｔｒｅｅ構造（　９／１６）

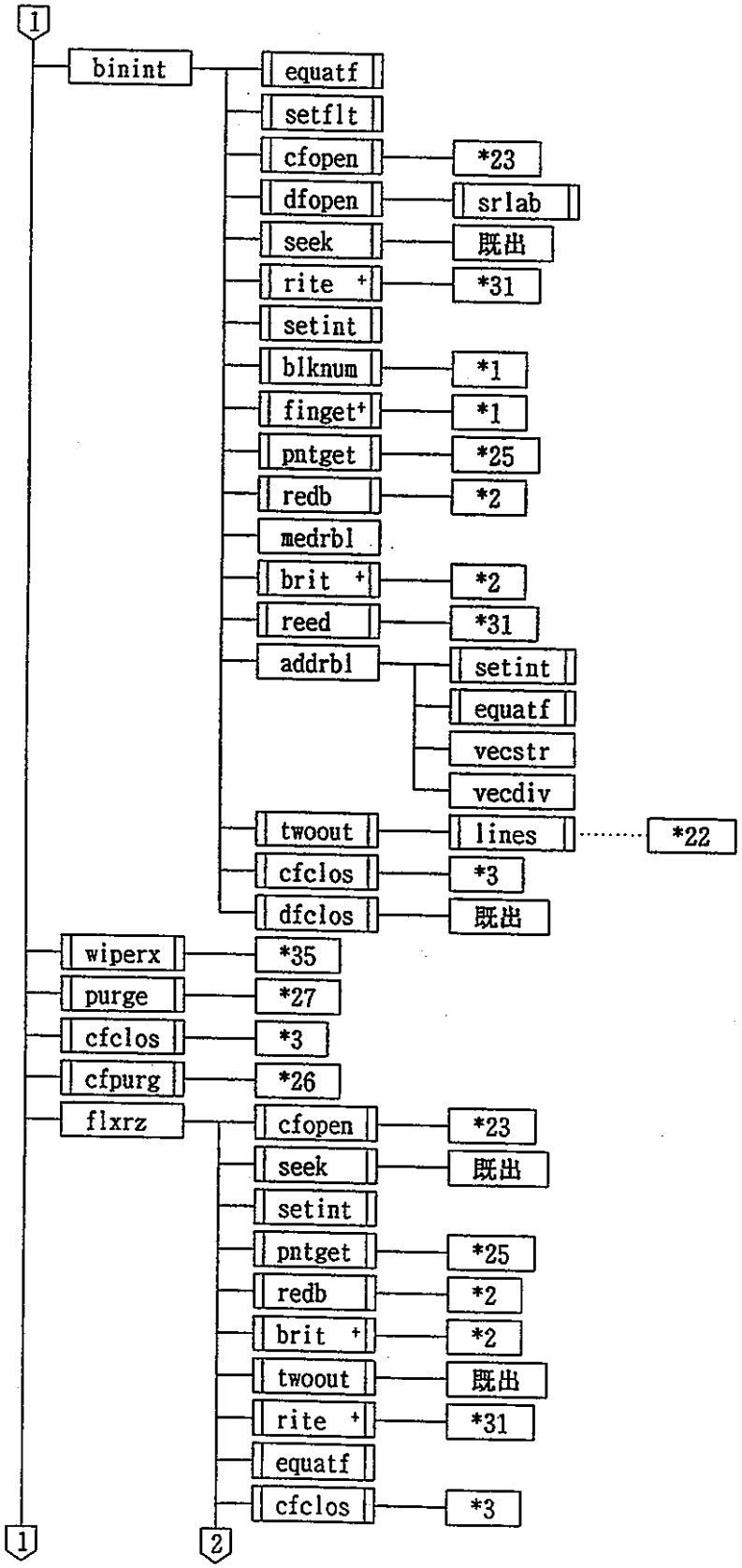

Block Data
Multi-Called
* FUNCTION
+ Entry
# Library

図2　Ｔｒｅｅ構造（１０／１６）

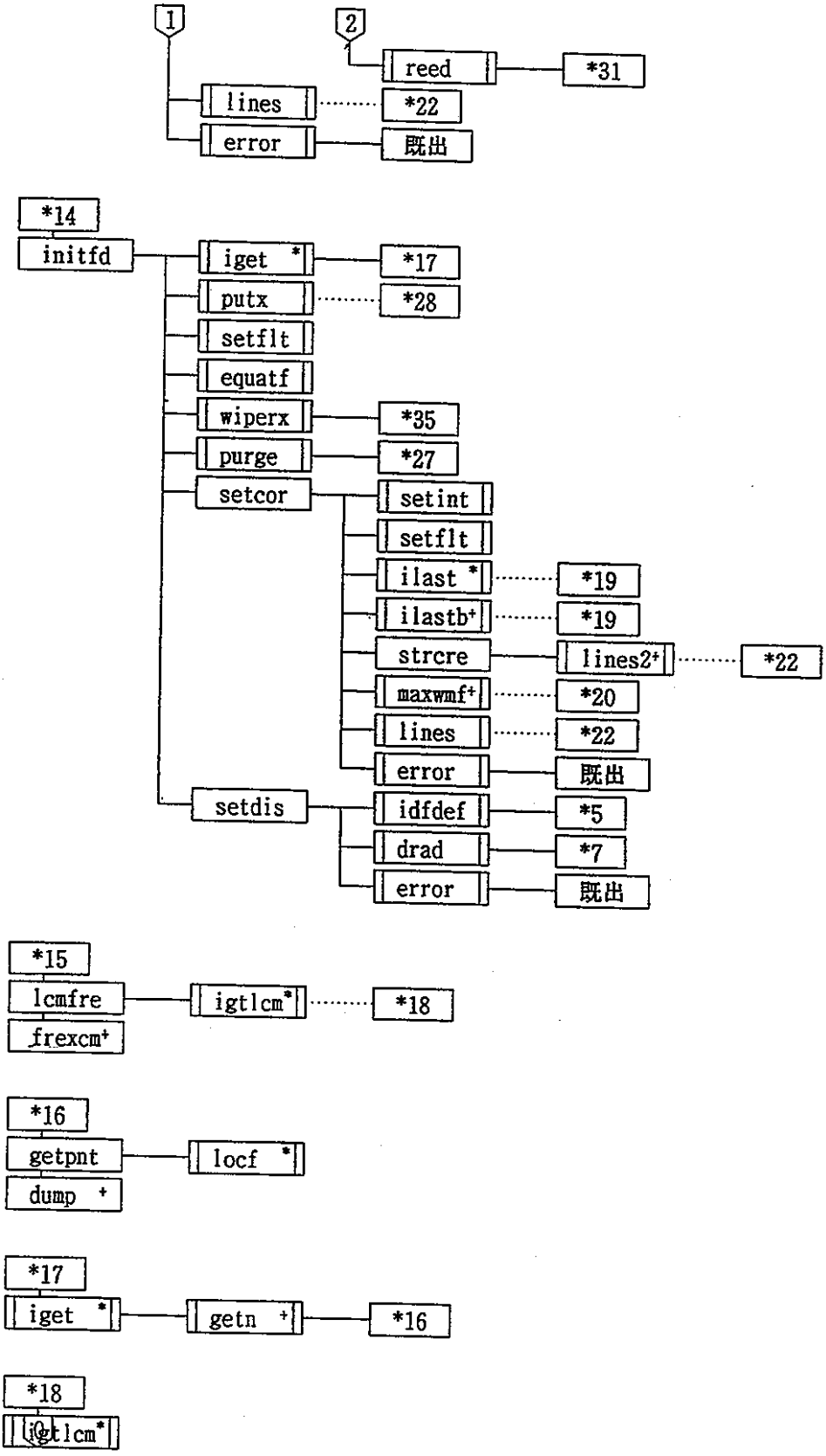

Block Data
Multi-Called
* FUNCTION
+ Entry
# Library

図2　Ｔｒｅｅ構造（１１／１６）

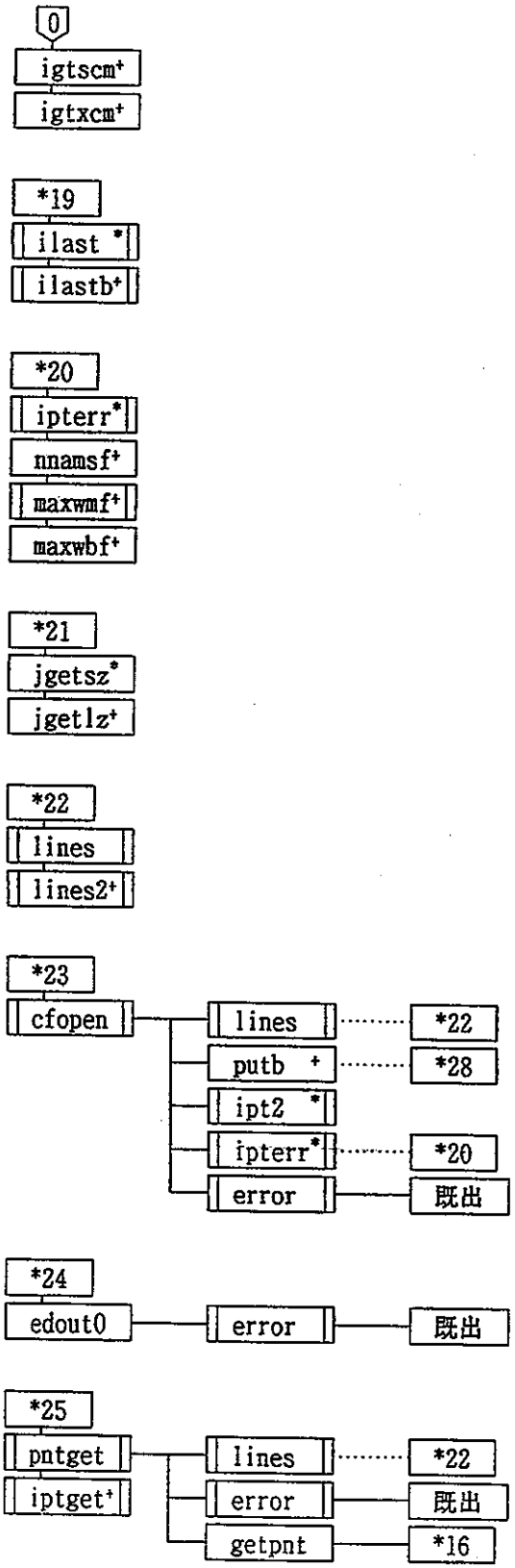

Block Data
Multi-Called
* FUNCTION
+ Entry
# Library

図2　Ｔｒｅｅ構造（１２／１６）

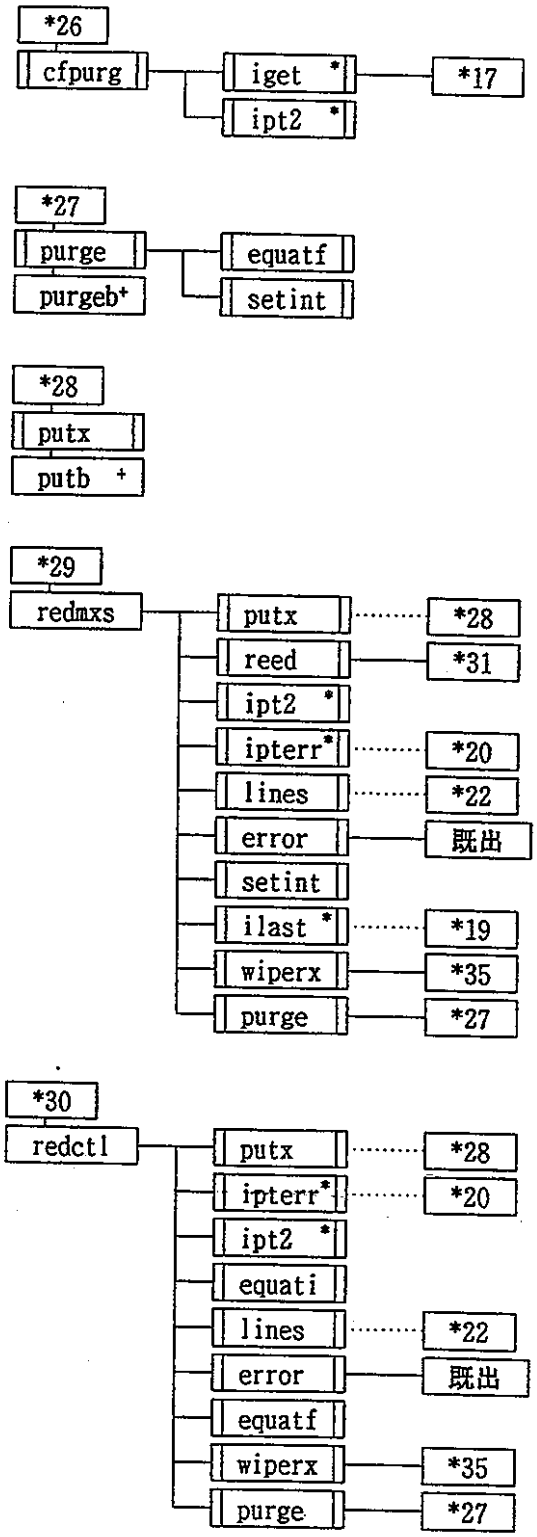

Block Data
Multi-Called
* FUNCTION
+ Entry
# Library

図２　Ｔｒｅｅ構造（１３／１６）

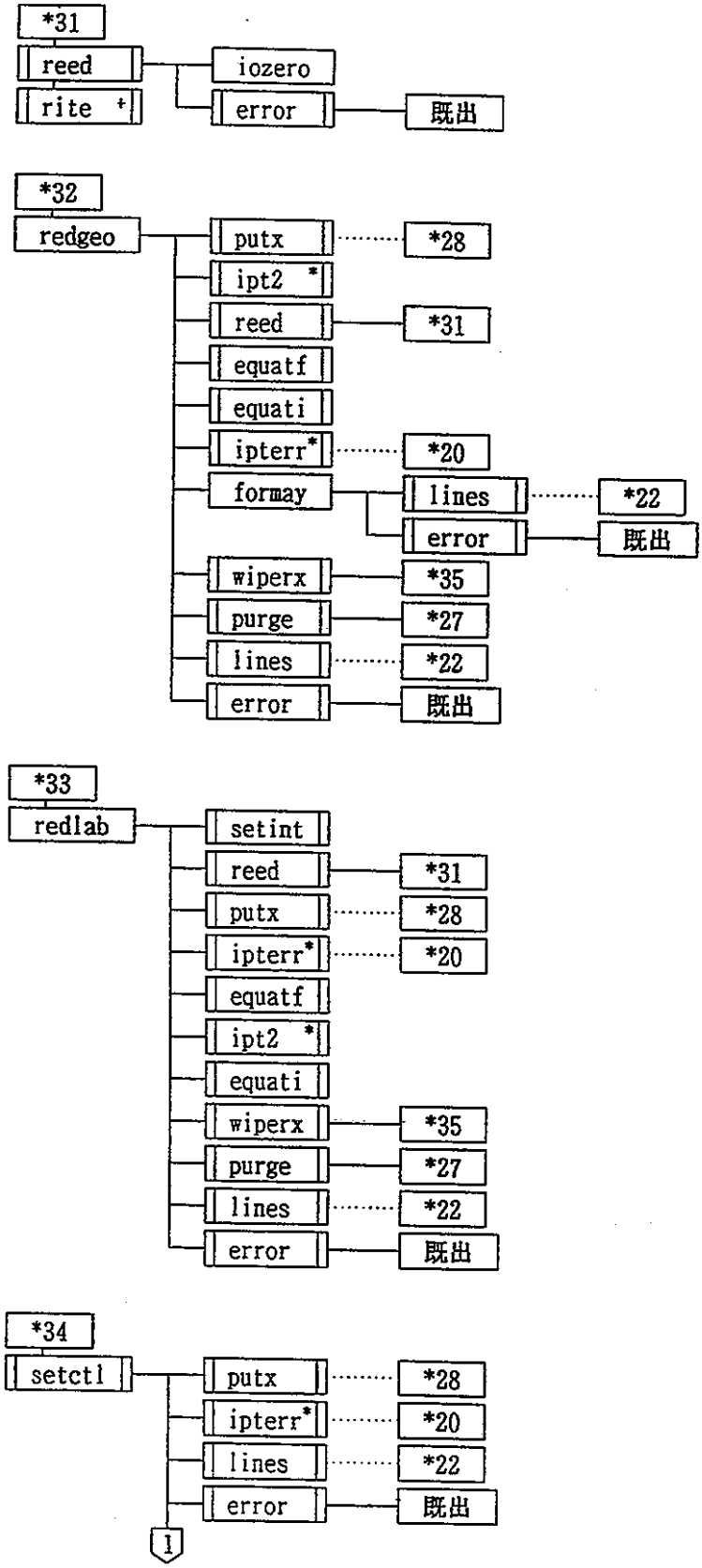

Block Data
Multi-Called
* FUNCTION
+ Entry
# Library

図２　Ｔｒｅｅ構造（１４／１６）

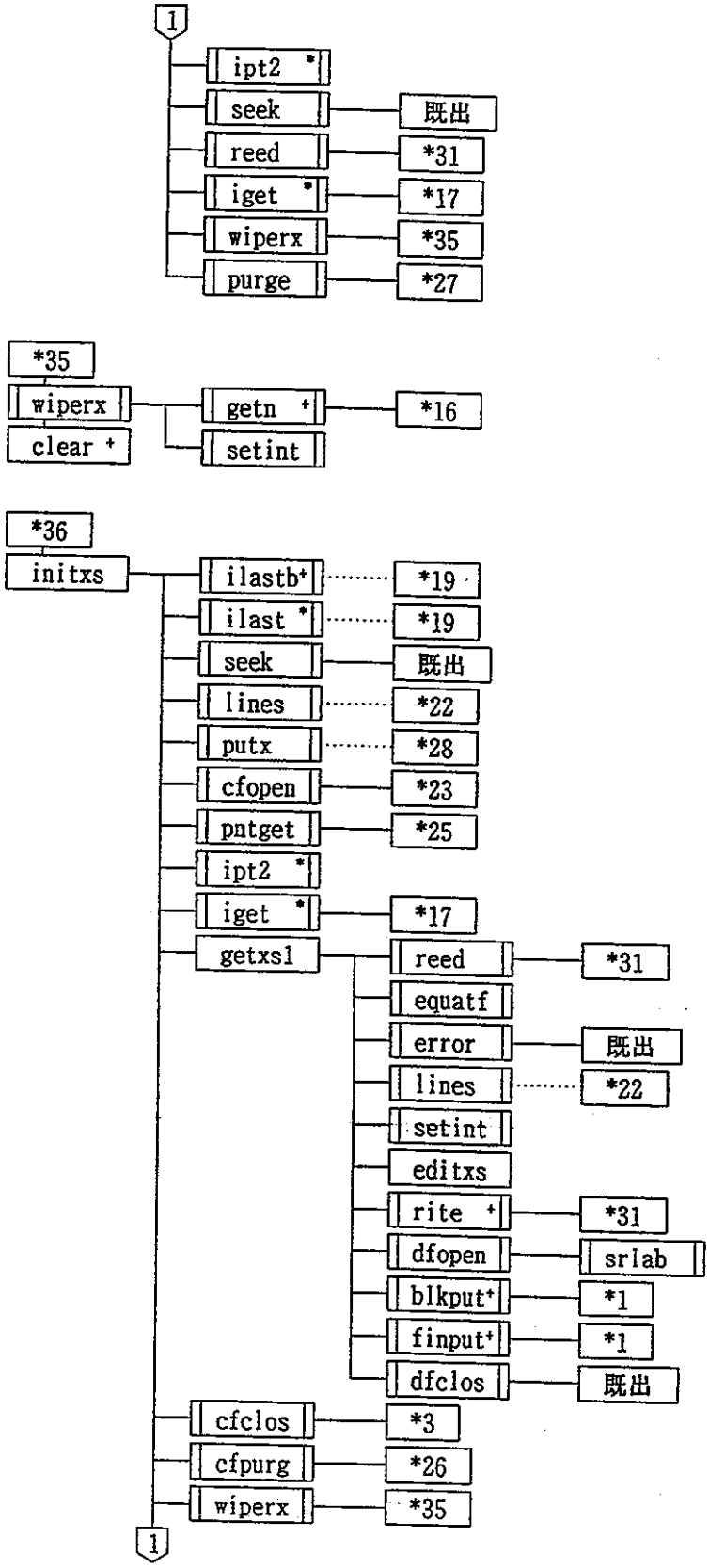

Block Data
Multi-Called
* FUNCTION
+ Entry
# Library

図2　Ｔｒｅｅ構造（１５／１６）

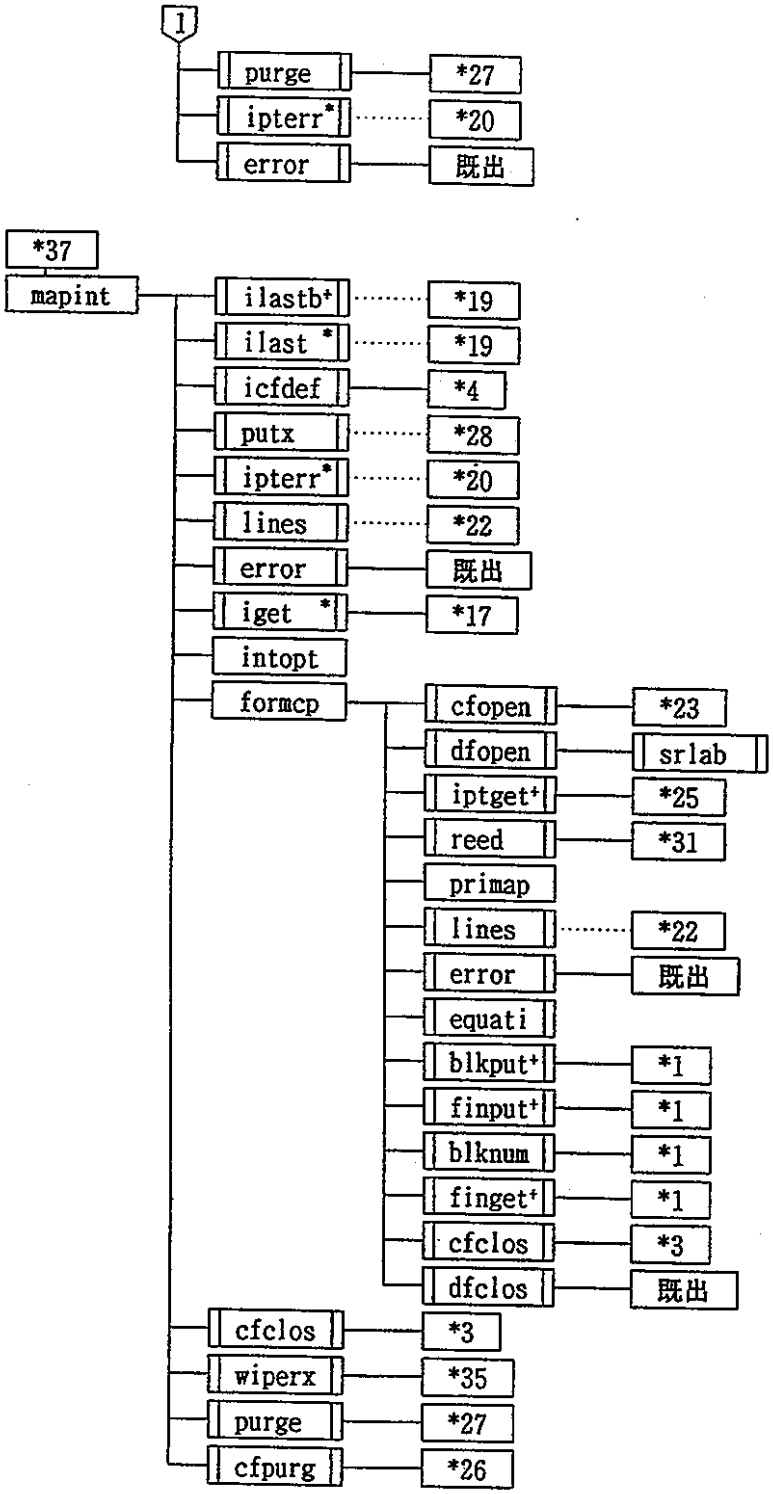

Block Data
Multi-Called
* FUNCTION
+ Entry
# Library

図２　Ｔｒｅｅ構造（１６／１６）

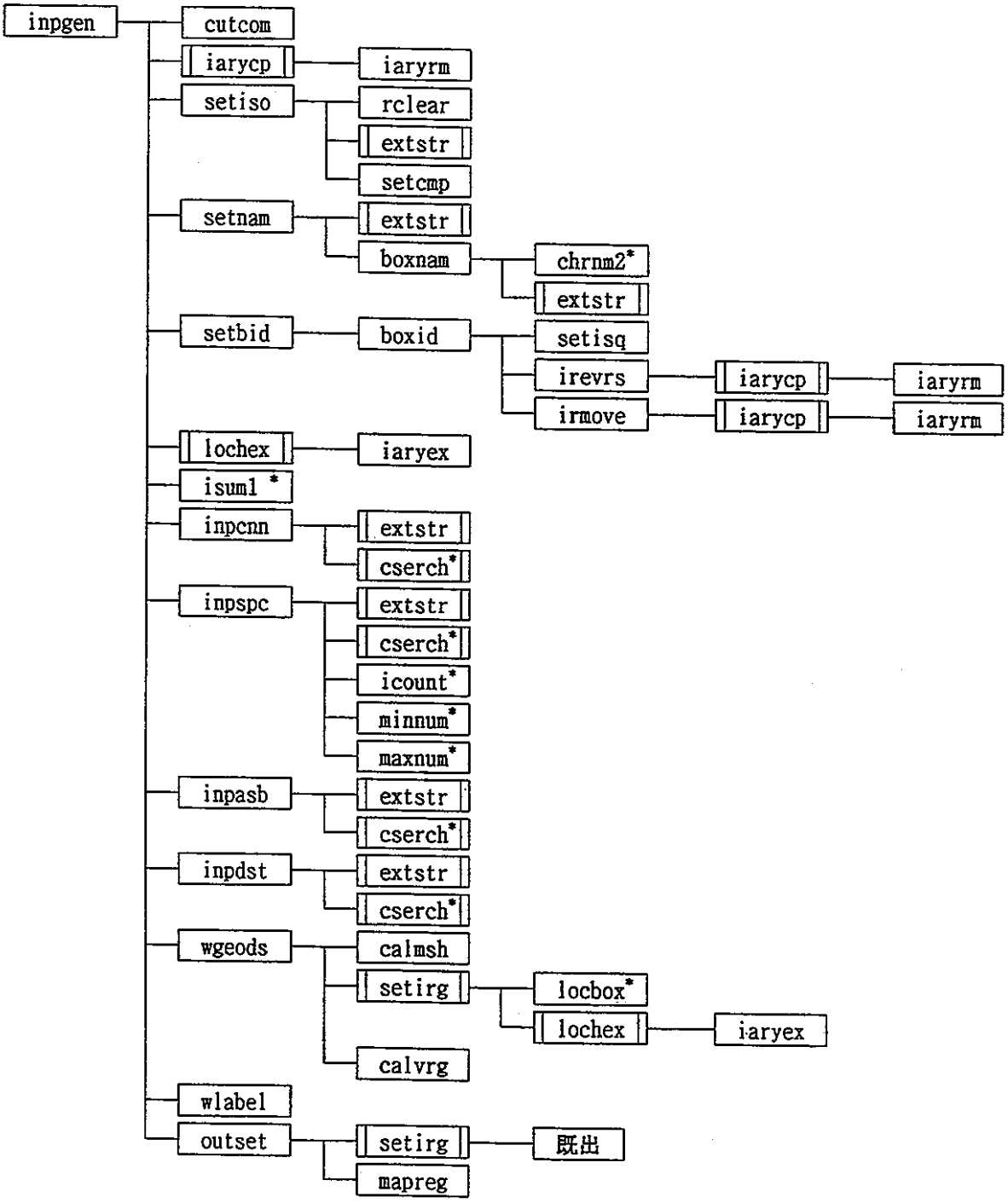

Multi-Called
* FUNCTION

付録4　中性子束計算モジュール入力例

```
################################################################################
# Input data
#

#   Main Title
 magi-mk3 neutron flux module sample 3g-dif. case-1 6crs-ot
#
 $control
#
#   Convergence Criteria
  epsr1 =  1.00000E-05,  epsr2 =  1.00000E-04,  epsr3 =  1.00000E-04,
#
#   Steady State Reactor Power [Watts]
  powin =  1.40000E+06,
#   nring : number of subassmbly rings
  nring =  13,
#   ndivs : =1 ... 6meshes, =2 ... 24meshes
  ndivs =   2,
#   pitch : dimension of hexagon across flats
  pitch =  8.19580E+00,
#   nxcmp : number of axial compornents
  nxcmp =  15,
#   ndivx(n) : number of meshes in each compornent
#   hgtop(n) : top position of compornent n
  ndivx( 1) =   1,   hgtop( 1) =  6.00000E+00,
  ndivx( 2) =   3,   hgtop( 2) =  4.10000E+01,
  ndivx( 3) =   3,   hgtop( 3) =  6.00000E+01,
  ndivx( 4) =   1,   hgtop( 4) =  6.25000E+01,
  ndivx( 5) =   1,   hgtop( 5) =  6.37040E+01,
  ndivx( 6) =  15,   hgtop( 6) =  1.14359E+02,
  ndivx( 7) =   1,   hgtop( 7) =  1.15566E+02,
  ndivx( 8) =   1,   hgtop( 8) =  1.21532E+02,
  ndivx( 9) =   3,   hgtop( 9) =  1.36531E+02,
  ndivx(10) =   1,   hgtop(10) =  1.39031E+02,
  ndivx(11) =   1,   hgtop(11) =  1.45566E+02,
  ndivx(12) =   3,   hgtop(12) =  1.76531E+02,
  ndivx(13) =   2,   hgtop(13) =  1.86531E+02,
  ndivx(14) =   3,   hgtop(14) =  2.03566E+02,
  ndivx(15) =   1,   hgtop(15) =  2.08566E+02,
#   boundary condition =4
  bndc = 0.4692,
 $end

#
#        connection of region and isotope data (2a10)
#
# name of region
#          |  name of isotope label
#          |         |
*material
  kcore1    core1
  kcore2    core2
  kcor3i    crin3
  kcor3o    crot3
  kcore4    core4
  kcore5    core5
  ktypeb    typeB
  ktypec    typeC
  kcmtyb    CMTyB
  kinslt    inslt
  klsld     lsld
  kusld     usld
  krsldc    rsldc
  kntsld    ntsld
  kcradp    cradp
  kcrabs    crabs
  kentno    entno
  kgaspl    gaspl
  khlhed    hlhed
  kinlsd    inlsd
  kinusd    inusd
  knlsld    nlsld
  kngspl    ngspl
  knhlhd    nhlhd
  kmtrix    mtrix
  klcrdp    lcrdp
  kucrdp    ucrdp
*end-block
#
#    information of distribution of subassemblies (2a10)
#
#name of box(a5)
#   |   name of subassembly(a8)
#   |     |
*distribution
  000       sknd 1
  1a1       sknd 3
  1b1       sknd 2
  1c1       sknd 3
  1d1       sknd 2
  1e1       sknd 3
  1f1       sknd 2
  2a1       sknd 4
  2a2       sknd 4
  2b1       sknd 4
  2b2       sknd 4
  2c1       sknd 4
  2c2       sknd 4
  2d1       sknd 4
  2d2       sknd 4
  2e1       sknd 4
  2e2       sknd 4
  2f1       sknd 4
  2f2       sknd 4
  3a1       sknd 5
  3a2       sknd 6
  3a3       sknd 5
  3b1       sknd 5
  3b2       sknd 6
  3b3       sknd 7
  3c1       sknd 5
  3c2       sknd 8
  3c3       sknd 7
  3d1       sknd 5
  3d2       sknd 6
  3d3       sknd 5
  3e1       sknd 5
  3e2       sknd 6
  3e3       sknd 7
  3f1       sknd 5
  3f2       sknd 1
  3f3       sknd 7
  4a1       sknd 9
  4a2       sknd 9
  4a3       sknd 9
  4a4       sknd 9
  4b1       sknd 9
  4b2       sknd 9
  4b3       sknd 9
  4b4       sknd 9
```

file:magimk3_nsmple_inp

```
4c1     sknd 9
4c2     sknd 9
4c3     sknd 9
4c4     sknd 9
4d1     sknd 9
4d2     sknd 9
4d3     sknd 9
4d4     sknd 9
4e1     sknd 9
4e2     sknd 9
4e3     sknd 9
4e4     sknd 9
4f1     sknd 9
4f2     sknd 9
4f3     sknd 9
4f4     sknd 9
5a1     sknd11
5a2     sknd11
5a3     sknd11
5a4     sknd11
5a5     sknd11
5b1     sknd10
5b2     sknd11
5b3     sknd11
5b4     sknd11
5b5     sknd 6
5c1     sknd11
5c2     sknd11
5c3     sknd11
5c4     sknd11
5c5     sknd11
5d1     sknd11
5d2     sknd11
5d3     sknd11
5d4     sknd11
5d5     sknd11
5e1     sknd10
5e2     sknd11
5e3     sknd11
5e4     sknd11
5e5     sknd 6
5f1     sknd11
5f2     sknd11
5f3     sknd11
5f4     sknd11
5f5     sknd11
6a1     sknd12
6a2     sknd10
6a3     sknd10
6a4     sknd10
6a5     sknd10
6a6     sknd10
6b1     sknd12
6b2     sknd10
6b3     sknd10
6b4     sknd10
6b5     sknd10
6b6     sknd10
6c1     sknd12
6c2     sknd10
6c3     sknd10
6c4     sknd10
6c5     sknd10
6c6     sknd10
6d1     sknd12
6d2     sknd10
6d3     sknd10
6d4     sknd10
6d5     sknd10
6d6     sknd10
6e1     sknd12
6e2     sknd10
6e3     sknd10
6e4     sknd10
6e5     sknd10
6e6     sknd10
6f1     sknd12
6f2     sknd10
6f3     sknd10
6f4     sknd10
6f5     sknd10
6f6     sknd10
7a1     sknd12
7a2     sknd12
7a3     sknd12
7a4     sknd12
7a5     sknd12
7a6     sknd12
7a7     sknd12
7b1     sknd12
7b2     sknd12
7b3     sknd12
7b4     sknd12
7b5     sknd12
7b6     sknd12
7b7     sknd12
7c1     sknd12
7c2     sknd12
7c3     sknd12
7c4     sknd12
7c5     sknd12
7c6     sknd12
7c7     sknd12
7d1     sknd12
7d2     sknd12
7d3     sknd12
7d4     sknd12
7d5     sknd12
7d6     sknd12
7d7     sknd12
7e1     sknd12
7e2     sknd12
7e3     sknd12
7e4     sknd12
7e5     sknd12
7e6     sknd12
7e7     sknd12
7f1     sknd12
7f2     sknd12
7f3     sknd12
7f4     sknd12
7f5     sknd12
7f6     sknd12
7f7     sknd12
8a1     sknd12
8a2     sknd12
8a3     sknd12
8a4     sknd12
8a5     sknd12
8a6     sknd12
```

file:magimk3_nsmple_inp

```
8a7        sknd12
8a8        sknd12
8b1        sknd12
8b2        sknd12
8b3        sknd12
8b4        sknd12
8b5        sknd12
8b6        sknd12
8b7        sknd12
8b8        sknd12
8c1        sknd12
8c2        sknd12
8c3        sknd12
8c4        sknd12
8c5        sknd12
8c6        sknd12
8c7        sknd12
8c8        sknd12
8d1        sknd12
8d2        sknd12
8d3        sknd12
8d4        sknd12
8d5        sknd12
8d6        sknd12
8d7        sknd12
8d8        sknd12
8e1        sknd12
8e2        sknd12
8e3        sknd12
8e4        sknd12
8e5        sknd12
8e6        sknd12
8e7        sknd12
8e8        sknd12
8f1        sknd12
8f2        sknd12
8f3        sknd12
8f4        sknd12
8f5        sknd12
8f6        sknd12
8f7        sknd12
8f8        sknd12
9a1        sknd13
9a2        sknd13
9a3        sknd13
9a4        sknd13
9a5        sknd13
9a6        sknd13
9a7        sknd13
9a8        sknd13
9a9        sknd13
9b1        sknd13
9b2        sknd13
9b3        sknd13
9b4        sknd13
9b5        sknd13
9b6        sknd13
9b7        sknd13
9b8        sknd13
9b9        sknd13
9c1        sknd13
9c2        sknd13
9c3        sknd13
9c4        sknd13
9c5        sknd13
9c6        sknd13
9c7        sknd13
9c8        sknd13
9c9        sknd13
9d1        sknd13
9d2        sknd13
9d3        sknd13
9d4        sknd13
9d5        sknd13
9d6        sknd13
9d7        sknd13
9d8        sknd13
9d9        sknd13
9e1        sknd13
9e2        sknd13
9e3        sknd13
9e4        sknd13
9e5        sknd13
9e6        sknd13
9e7        sknd13
9e8        sknd13
9e9        sknd13
9f1        sknd13
9f2        sknd13
9f3        sknd13
9f4        sknd13
9f5        sknd13
9f6        sknd13
9f7        sknd13
9f8        sknd13
9f9        sknd13
10a1       sknd14
10a2       sknd14
10a3       sknd13
10a4       sknd13
10a5       sknd13
10a6       sknd13
10a7       sknd13
10a8       sknd13
10a9       sknd13
10a10      sknd14
10b1       sknd14
10b2       sknd14
10b3       sknd13
10b4       sknd13
10b5       sknd13
10b6       sknd13
10b7       sknd13
10b8       sknd13
10b9       sknd13
10b10      sknd14
10c1       sknd14
10c2       sknd14
10c3       sknd13
10c4       sknd13
10c5       sknd13
10c6       sknd13
10c7       sknd13
10c8       sknd13
10c9       sknd13
10c10      sknd14
10d1       sknd14
10d2       sknd14
10d3       sknd13
10d4       sknd13
```

file:magimk3_nsmple_inp

```
10d5        sknd13
10d6        sknd13
10d7        sknd13
10d8        sknd13
10d9        sknd13
10d10       sknd14
10e1        sknd14
10e2        sknd14
10e3        sknd13
10e4        sknd13
10e5        sknd13
10e6        sknd13
10e7        sknd13
10e8        sknd13
10e9        sknd13
10e10       sknd14
10f1        sknd14
10f2        sknd14
10f3        sknd13
10f4        sknd13
10f5        sknd13
10f6        sknd13
10f7        sknd13
10f8        sknd13
10f9        sknd13
10f10       sknd14
11a1        sknd14
11a2        sknd14
11a3        sknd14
11a4        sknd14
11a5        sknd14
11a6        sknd14
11a7        sknd14
11a8        sknd14
11a9        sknd14
11a10       sknd14
11a11       sknd14
11b1        sknd14
11b2        sknd14
11b3        sknd14
11b4        sknd14
11b5        sknd14
11b6        sknd14
11b7        sknd14
11b8        sknd14
11b9        sknd14
11b10       sknd14
11b11       sknd14
11c1        sknd14
11c2        sknd14
11c3        sknd14
11c4        sknd14
11c5        sknd14
11c6        sknd14
11c7        sknd14
11c8        sknd14
11c9        sknd14
11c10       sknd14
11c11       sknd14
11d1        sknd14
11d2        sknd14
11d3        sknd14
11d4        sknd14
11d5        sknd14
11d6        sknd14
11d7        sknd14
11d8        sknd14
11d9        sknd14
11d10       sknd14
11d11       sknd14
11e1        sknd14
11e2        sknd14
11e3        sknd14
11e4        sknd14
11e5        sknd14
11e6        sknd14
11e7        sknd14
11e8        sknd14
11e9        sknd14
11e10       sknd14
11e11       sknd14
11f1        sknd14
11f2        sknd14
11f3        sknd14
11f4        sknd14
11f5        sknd14
11f6        sknd14
11f7        sknd14
11f8        sknd14
11f9        sknd14
11f10       sknd14
11f11       sknd14
12a1        sknd14
12a2        sknd14
12a3        sknd14
12a4        sknd14
12a5        sknd14
12a6        sknd14
12a7        sknd14
12a8        sknd14
12a9        sknd14
12a10       sknd14
12a11       sknd14
12a12       sknd14
12b1        sknd14
12b2        sknd14
12b3        sknd14
12b4        sknd14
12b5        sknd14
12b6        sknd14
12b7        sknd14
12b8        sknd14
12b9        sknd14
12b10       sknd14
12b11       sknd14
12b12       sknd14
12c1        sknd14
12c2        sknd14
12c3        sknd14
12c4        sknd14
12c5        sknd14
12c6        sknd14
12c7        sknd14
12c8        sknd14
12c9        sknd14
12c10       sknd14
12c11       sknd14
12c12       sknd14
12d1        sknd14
12d2        sknd14
```

file:magimk3_nsample_inp

```
  12d3       sknd14
  12d4       sknd14
  12d5       sknd14
  12d6       sknd14
  12d7       sknd14
  12d8       sknd14
  12d9       sknd14
  12d10      sknd14
  12d11      sknd14
  12d12      sknd14
  12e1       sknd14
  12e2       sknd14
  12e3       sknd14
  12e4       sknd14
  12e5       sknd14
  12e6       sknd14
  12e7       sknd14
  12e8       sknd14
  12e9       sknd14
  12e10      sknd14
  12e11      sknd14
  12e12      sknd14
  12f1       sknd14
  12f2       sknd14
  12f3       sknd14
  12f4       sknd14
  12f5       sknd14
  12f6       sknd14
  12f7       sknd14
  12f8       sknd14
  12f9       sknd14
  12f10      sknd14
  12f11      sknd14
  12f12      sknd14
*end-block
#
#    information of subassemblies (a10,6a10)
#
#  name of subassembly
#         |        name of region
#         |          |
*subassembly
  sknd 1     kentno    klsld     klsld     klsld     kinslt    ktypeb
             kinslt    kusld     kusld     kusld     kusld     kgaspl
             kgaspl    kgaspl    khlhed
  sknd 2     kentno    klsld     klsld     klsld     kinslt    ktypec
             kinslt    kusld     kusld     kusld     kusld     kgaspl
             kgaspl    kgaspl    khlhed
  sknd 3     kentno    klsld     klsld     klsld     kinslt    kcore1
             kinslt    kusld     kusld     kusld     kusld     kgaspl
             kgaspl    kgaspl    khlhed
  sknd 4     kentno    klsld     klsld     klsld     kinslt    kcore2
             kinslt    kusld     kusld     kusld     kusld     kgaspl
             kgaspl    kgaspl    khlhed
  sknd 5     kentno    klsld     klsld     klsld     kinslt    kcor3o
             kinslt    kusld     kusld     kusld     kusld     kgaspl
             kgaspl    kgaspl    khlhed
  sknd 6     klcrdp    klcrdp    klcrdp    klcrdp    klcrdp    kcradp
             kcradp    kcrsdp    kcrabs    kcrabs    kcrabs    kcrabs
             kcrabs    kucrdp    kucrdp
  sknd 7     kentno    klsld     klsld     klsld     kinslt    kcor3i
             kinslt    kusld     kusld     kusld     kusld     kgaspl
             kgaspl    kgaspl    khlhed
  sknd 8     kentno    klsld     klsld     klsld     kinslt    kcmtyb
             kinslt    kusld     kusld     kusld     kusld     kgaspl
             kgaspl    kgaspl    khlhed
  sknd 9     kentno    klsld     klsld     klsld     kinslt    kcore4
             kinslt    kusld     kusld     kusld     kusld     kgaspl
             kgaspl    kgaspl    khlhed
  sknd10     kinlsd    kinlsd    krsldc    krsldc    krsldc    krsldc
             krsldc    krsldc    krsldc    kinusd    kinusd    kinusd
             knhlhd    knhlhd    knhlhd
  sknd11     kentno    klsld     klsld     klsld     kinslt    kcore5
             kinslt    kusld     kusld     kusld     kusld     kgaspl
             kgaspl    kgaspl    khlhed
  sknd12     krsldc    krsldc    krsldc    krsldc    krsldc    krsldc
             krsldc    krsldc    krsldc    krsldc    krsldc    krsldc
             krsldc    krsldc    knhlhd
  sknd13     knlsld    knlsld    kntsld    kntsld    kntsld    kntsld
             kntsld    kntsld    kntsld    kntsld    kngspl    knhlhd
             knhlhd    knhlhd    knhlhd
  sknd14     kmtrix    kmtrix    kmtrix    kmtrix    kmtrix    kmtrix
             kmtrix    kmtrix    kmtrix    kmtrix    kmtrix    kmtrix
             kmtrix    kmtrix    kmtrix
*end-block

#######################################################################
#
# data for COMPXS
#
 $isoinfo
#       ncomp : number of compositions
  ncomp  =  27,
#       ngroup : number of energy groups
  ngroup =   3,
#       ifiss : flag of fissionable zone or not
  ifiss(1) = 1, 1, 1, 1, 1, 1, 1, 1, 1, 1, 1, 0, 0, 0, 0, 0, 0, 0,
             0, 0, 0, 0, 0, 0, 0, 0, 0, 0, 0,
#       isn2n : flag of n,2n reaction cross section exists or not
  isn2n(1) = 1, 1, 1, 1, 1, 1, 1, 1, 1, 1, 1, 1, 1, 1, 1, 1, 1, 1,
             1, 1, 1, 1, 1, 1, 1, 1, 1, 1, 1,
#       chi(j) : prompt fission fraction into group j. [-]
  chi(1)       = 9.06060E-01, 9.35564E-02, 3.83306E-04,
#       vel(j) : mean neutron velocity in group j. [cm/sec]
  vel(1)       = 1.00000E+00, 1.00000E+00, 1.00000E+00,
#       emax(j) : maximum energy bound of group j [eV]
  emax(1)      = 1.00000E+00, 1.00000E+00, 1.00000E+00,
#       emin : minimum energy bound of set [eV]
  emin         = 1.00000E+00,
 $end
#
#########################################  Specific Data of Zone
#
# ( 1) core1
#
 $isocomp
#       cisot : isotope label
  namiso = "core1 ",
#       sigc(j) : n,gamma cross sections for isotope
  sigc(1)      = 1.13202E-03, 2.86052E-03, 1.51450E-02,
#       sigf(j) : n,fission cross sections for isotope
  sigf(1)      = 5.15882E-03, 3.74920E-03, 1.04991E-02,
#       totpl(j) : p-1 weighted total crosss sections for isotope
  totpl(1)     = 1.65336E-01, 2.85932E-01, 5.69164E-01,
#       strpl(j) : p-1 moments of transport cross sections for isotope
  strpl(1)     = 1.52724E-01, 2.66682E-01, 5.18708E-01,
#       totnu(j) : total neutrons/fission yield for group j for isotope
  totnu(1)     = 2.90000E+00, 2.90001E+00, 2.90001E+00,
#       sn2n(j) : material macroscopic n,2n cross section
  sn2n(1)      = 4.84439E-05, 3.42965E-11, 2.00963E-13,
```

file:magimk3_nsmple_inp

```
#       scatt(j,i) : total scattering cross section into group i from
#                    groups j.
  scatt(1, 1) = 1.92891E-01,
  scatt(1, 2) = 2.91683E-01, 1.61266E-02,
  scatt(1, 3) = 5.52250E-01, 1.68401E-03, 5.66858E-05,
 $end
#
# ( 2) core2
#
 $isocomp
#       cisot : isotope label
  namiso = "core2 ",
#       sigc(j) : n,gamma cross sections for isotope
  sigc(1)     = 1.13300E-03, 2.85315E-03, 1.49134E-02,
#       sigf(j) : n,fission cross sections for isotope
  sigf(1)     = 5.13961E-03, 3.69766E-03, 1.01781E-02,
#       totpl(j) : p-l weighted total crosss sections for isotope
  totpl(1)    = 1.64900E-01, 2.85824E-01, 5.71802E-01,
#       strpl(j) : p-l moments of transport cross sections for isotope
  strpl(1)    = 1.52329E-01, 2.66605E-01, 5.20998E-01,
#       totnu(j) : total neutrons/fission yield for group j for isotope
  totnu(1)    = 2.90001E+00, 2.90000E+00, 2.90000E+00,
#       sn2n(j) : material macroscopic n,2n cross section
  sn2n(1)     = 4.97291E-05, 4.10748E-11, 2.46041E-13,
#       scatt(j,i) : total scattering cross section into group i from
#                    groups j.
  scatt(1, 1) = 1.92780E-01,
  scatt(1, 2) = 2.91714E-01, 1.59572E-02,
  scatt(1, 3) = 5.55552E-01, 1.65978E-03, 5.69336E-05,
 $end
#
# ( 3) crin3
#
 $isocomp
#       cisot : isotope label
  namiso = "crin3 ",
#       sigc(j) : n,gamma cross sections for isotope
  sigc(1)     = 1.13205E-03, 2.85633E-03, 1.52451E-02,
#       sigf(j) : n,fission cross sections for isotope
  sigf(1)     = 5.14791E-03, 3.71389E-03, 1.04592E-02,
#       totpl(j) : p-l weighted total crosss sections for isotope
  totpl(1)    = 1.65113E-01, 2.85875E-01, 5.67492E-01,
#       strpl(j) : p-l moments of transport cross sections for isotope
  strpl(1)    = 1.52476E-01, 2.66609E-01, 5.18069E-01,
#       totnu(j) : total neutrons/fission yield for group j for isotope
  totnu(1)    = 2.89999E+00, 2.90001E+00, 2.90000E+00,
#       sn2n(j) : material macroscopic n,2n cross section
  sn2n(1)     = 4.91972E-05, 3.89643E-11, 2.25899E-13,
#       scatt(j,i) : total scattering cross section into group i from
#                    groups j.
  scatt(1, 1) = 1.92819E-01,
  scatt(1, 2) = 2.91712E-01, 1.61087E-02,
  scatt(1, 3) = 5.50470E-01, 1.67465E-03, 5.70060E-05,
 $end
#
# ( 4) crot3
#
 $isocomp
#       cisot : isotope label
  namiso = "crot3 ",
#       sigc(j) : n,gamma cross sections for isotope
  sigc(1)     = 1.13685E-03, 2.90261E-03, 1.58245E-02,
#       sigf(j) : n,fission cross sections for isotope
  sigf(1)     = 5.79644E-03, 4.15901E-03, 1.12599E-02,
#       totpl(j) : p-l weighted total crosss sections for isotope
  totpl(1)    = 1.65800E-01, 2.87375E-01, 5.72615E-01,
#       strpl(j) : p-l moments of transport cross sections for isotope
  strpl(1)    = 1.53058E-01, 2.68205E-01, 5.23664E-01,
#       totnu(j) : total neutrons/fission yield for group j for isotope
  totnu(1)    = 2.90000E+00, 2.89999E+00, 2.90000E+00,
#       sn2n(j) : material macroscopic n,2n cross section
  sn2n(1)     = 4.96265E-05, 4.18870E-11, 2.61986E-13,
#       scatt(j,i) : total scattering cross section into group i from
#                    groups j.
  scatt(1, 1) = 1.93299E-01,
  scatt(1, 2) = 2.92760E-01, 1.59290E-02,
  scatt(1, 3) = 5.54399E-01, 1.66004E-03, 5.53780E-05,
 $end
#
# ( 5) core4
#
 $isocomp
#       cisot : isotope label
  namiso = "core4 ",
#       sigc(j) : n,gamma cross sections for isotope
  sigc(1)     = 1.13861E-03, 2.90314E-03, 1.58040E-02,
#       sigf(j) : n,fission cross sections for isotope
  sigf(1)     = 5.79735E-03, 4.13556E-03, 1.11841E-02,
#       totpl(j) : p-l weighted total crosss sections for isotope
  totpl(1)    = 1.65299E-01, 2.87432E-01, 5.75298E-01,
#       strpl(j) : p-l moments of transport cross sections for isotope
  strpl(1)    = 1.52648E-01, 2.68272E-01, 5.25264E-01,
#       totnu(j) : total neutrons/fission yield for group j for isotope
  totnu(1)    = 2.90000E+00, 2.89999E+00, 2.89999E+00,
#       sn2n(j) : material macroscopic n,2n cross section
  sn2n(1)     = 5.09244E-05, 4.47441E-11, 2.82041E-13,
#       scatt(j,i) : total scattering cross section into group i from
#                    groups j.
  scatt(1, 1) = 1.93078E-01,
  scatt(1, 2) = 2.92858E-01, 1.56947E-02,
  scatt(1, 3) = 5.57256E-01, 1.65429E-03, 5.55320E-05,
 $end
#
# ( 6) core5
#
 $isocomp
#       cisot : isotope label
  namiso = "core5 ",
#       sigc(j) : n,gamma cross sections for isotope
  sigc(1)     = 1.13664E-03, 2.94339E-03, 1.83248E-02,
#       sigf(j) : n,fission cross sections for isotope
  sigf(1)     = 5.74486E-03, 4.15428E-03, 1.30777E-02,
#       totpl(j) : p-l weighted total crosss sections for isotope
  totpl(1)    = 1.66864E-01, 2.88648E-01, 5.70269E-01,
#       strpl(j) : p-l moments of transport cross sections for isotope
  strpl(1)    = 1.53970E-01, 2.69278E-01, 5.18896E-01,
#       totnu(j) : total neutrons/fission yield for group j for isotope
  totnu(1)    = 2.90000E+00, 2.90000E+00, 2.90000E+00,
#       sn2n(j) : material macroscopic n,2n cross section
  sn2n(1)     = 4.77736E-05, 4.16583E-11, 2.25781E-13,
#       scatt(j,i) : total scattering cross section into group i from
#                    groups j.
  scatt(1, 1) = 1.94030E-01,
  scatt(1, 2) = 2.93711E-01, 1.63130E-02,
  scatt(1, 3) = 5.47388E-01, 1.83901E-03, 5.45635E-05,
 $end
#
# ( 7) typeB
#
 $isocomp
```

file:magimk3_nsmple_inp

```
#       cisot : isotope label
  namiso = "typeB ",
#       sigc(j) : n,gamma cross sections for isotope
  sigc(1)     = 8.94054E-04, 1.63971E-03, 8.02964E-03,
#       sigf(j) : n,fission cross sections for isotope
  sigf(1)     = 1.78079E-03, 1.03316E-03, 3.20628E-03,
#       totpl(j) : p-l weighted total crosss sections for isotope
  totpl(1)    = 1.29978E-01, 2.32528E-01, 5.53280E-01,
#       strpl(j) : p-l moments of transport cross sections for isotope
  strpl(1)    = 1.22456E-01, 2.02622E-01, 4.94148E-01,
#       totnu(j) : total neutrons/fission yield for group j for isotope
  totnu(1)    = 2.90001E+00, 2.90000E+00, 2.90000E+00,
#       sn2n(j) : material macroscopic n,2n cross section
  sn2n(1)     = 1.37297E-05, 1.07272E-19, 3.69332E-23,
#       scatt(j,i) : total scattering cross section into group i from
#                    groups j.
  scatt(1, 1) = 1.53239E-01,
  scatt(1, 2) = 2.39274E-01, 1.04010E-02,
  scatt(1, 3) = 5.51037E-01, 1.49154E-03, 3.51295E-05,
 $end
#
# ( 8) typeC
#
 $isocomp
#       cisot : isotope label
  namiso = "typeC ",
#       sigc(j) : n,gamma cross sections for isotope
  sigc(1)     = 1.20526E-03, 2.50166E-03, 1.17716E-02,
#       sigf(j) : n,fission cross sections for isotope
  sigf(1)     = 3.11131E-03, 1.78552E-03, 5.39686E-03,
#       totpl(j) : p-l weighted total crosss sections for isotope
  totpl(1)    = 1.46323E-01, 2.55396E-01, 5.64101E-01,
#       strpl(j) : p-l moments of transport cross sections for isotope
  strpl(1)    = 1.36431E-01, 2.32440E-01, 5.03663E-01,
#       totnu(j) : total neutrons/fission yield for group j for isotope
  totnu(1)    = 2.90000E+00, 2.90000E+00, 2.90000E+00,
#       sn2n(j) : material macroscopic n,2n cross section
  sn2n(1)     = 2.45561E-05, 1.64013E-19, 6.40283E-23,
#       scatt(j,i) : total scattering cross section into group i from
#                    groups j.
  scatt(1, 1) = 1.71392E-01,
  scatt(1, 2) = 2.61742E-01, 1.28290E-02,
  scatt(1, 3) = 5.56243E-01, 1.56542E-03, 3.68773E-05,
 $end
#
# ( 9) CMTyB
#
 $isocomp
#       cisot : isotope label
  namiso = "CMTyB ",
#       sigc(j) : n,gamma cross sections for isotope
  sigc(1)     = 6.23826E-04, 9.69154E-04, 4.63853E-03,
#       sigf(j) : n,fission cross sections for isotope
  sigf(1)     = 9.05377E-04, 5.15809E-04, 1.55716E-03,
#       totpl(j) : p-l weighted total crosss sections for isotope
  totpl(1)    = 1.06958E-01, 1.92855E-01, 4.92019E-01,
#       strpl(j) : p-l moments of transport cross sections for isotope
  strpl(1)    = 1.01063E-01, 1.63750E-01, 4.33025E-01,
#       totnu(j) : total neutrons/fission yield for group j for isotope
  totnu(1)    = 2.90000E+00, 2.90001E+00, 2.90000E+00,
#       sn2n(j) : material macroscopic n,2n cross section
  sn2n(1)     = 7.54217E-06, 6.45790E-20, 1.92436E-23,
#       scatt(j,i) : total scattering cross section into group i from
#                    groups j.
  scatt(1, 1) = 1.27014E-01,
  scatt(1, 2) = 1.99110E-01, 7.84840E-03,
  scatt(1, 3) = 4.94125E-01, 1.22801E-03, 3.01882E-05,
 $end
#
# (10) inslt
#
 $isocomp
#       cisot : isotope label
  namiso = "inslt ",
#       sigc(j) : n,gamma cross sections for isotope
  sigc(1)     = 1.09159E-03, 2.49428E-03, 1.19117E-02,
#       sigf(j) : n,fission cross sections for isotope
  sigf(1)     = 1.49357E-03, 1.35454E-04, 5.26455E-04,
#       totpl(j) : p-l weighted total crosss sections for isotope
  totpl(1)    = 1.67762E-01, 2.88180E-01, 5.26694E-01,
#       strpl(j) : p-l moments of transport cross sections for isotope
  strpl(1)    = 1.54337E-01, 2.67714E-01, 4.66967E-01,
#       totnu(j) : total neutrons/fission yield for group j for isotope
  totnu(1)    = 2.90000E+00, 2.90000E+00, 2.90000E+00,
#       sn2n(j) : material macroscopic n,2n cross section
  sn2n(1)     = 4.47959E-05, 2.49391E-12, 1.59049E-14,
#       scatt(j,i) : total scattering cross section into group i from
#                    groups j.
  scatt(1, 1) = 1.97232E-01,
  scatt(1, 2) = 2.97294E-01, 1.80876E-02,
  scatt(1, 3) = 5.23311E-01, 2.07179E-03, 6.63384E-05,
 $end
#
# (11) lsld
#
 $isocomp
#       cisot : isotope label
  namiso = "lsld  ",
#       sigc(j) : n,gamma cross sections for isotope
  sigc(1)     = 3.98158E-04, 5.49917E-04, 3.64444E-03,
#       totpl(j) : p-l weighted total crosss sections for isotope
  totpl(1)    = 1.34120E-01, 2.51517E-01, 5.45481E-01,
#       strpl(j) : p-l moments of transport cross sections for isotope
  strpl(1)    = 1.26308E-01, 1.98597E-01, 4.93819E-01,
#       sn2n(j) : material macroscopic n,2n cross section
  sn2n(1)     = 2.49560E-07, 3.42803E-20, 0.00000E-00,
#       scatt(j,i) : total scattering cross section into group i from
#                    groups j.
  scatt(1, 1) = 1.53651E-01,
  scatt(1, 2) = 2.58302E-01, 1.04909E-02,
  scatt(1, 3) = 5.50118E-01, 2.58367E-03, 3.17654E-05,
 $end
#
# (12) usld
#
 $isocomp
#       cisot : isotope label
  namiso = "usld  ",
#       sigc(j) : n,gamma cross sections for isotope
  sigc(1)     = 4.99789E-04, 6.42622E-04, 3.44750E-03,
#       totpl(j) : p-l weighted total crosss sections for isotope
  totpl(1)    = 1.45287E-01, 2.73234E-01, 6.78535E-01,
#       strpl(j) : p-l moments of transport cross sections for isotope
  strpl(1)    = 1.36109E-01, 2.10278E-01, 6.13685E-01,
#       sn2n(j) : material macroscopic n,2n cross section
  sn2n(1)     = 3.07155E-07, 4.35415E-20, 0.00000E-00,
#       scatt(j,i) : total scattering cross section into group i from
#                    groups j.
  scatt(1, 1) = 1.69042E-01,
  scatt(1, 2) = 2.82169E-01, 1.00971E-02,
```

```
  scatt(1, 3) = 6.85065E-01, 2.17014E-03, 3.87181E-05,
 $end
#
# (13) rsldc
#
 $isocomp
#       cisot : isotope label
  namiso = "rsldc ",
#       sigc(j) : n,gamma cross sections for isotope
  sigc(1)      = 8.70414E-04, 1.16476E-03, 7.72370E-03,
#       totpl(j) : p-l weighted total crosss sections for isotope
  totpl(1)     = 1.92902E-01, 4.16983E-01, 9.54217E-01,
#       strpl(j) : p-l moments of transport cross sections for isotope
  strpl(1)     = 1.81704E-01, 3.03320E-01, 8.96773E-01,
#       sn2n(j) : material macroscopic n,2n cross section
  sn2n(1)      = 6.64081E-07, 6.88477E-12, 0.00000E+00,
#       scatt(j,i) : total scattering cross section into group i from
#                    groups j.
  scatt(1, 1) = 2.24384E-01,
  scatt(1, 2) = 4.29146E-01, 1.19662E-02,
  scatt(1, 3) = 9.58836E-01, 3.50330E-03, 4.09935E-05,
 $end
#
# (14) ntsld
#
 $isocomp
#       cisot : isotope label
  namiso = "ntsld ",
#       sigc(j) : n,gamma cross sections for isotope
  sigc(1)      = 5.85935E-03, 2.63314E-02, 1.33312E-01,
#       totpl(j) : p-l weighted total crosss sections for isotope
  totpl(1)     = 2.48549E-01, 3.85538E-01, 6.86584E-01,
#       strpl(j) : p-l moments of transport cross sections for isotope
  strpl(1)     = 2.34527E-01, 3.69015E-01, 6.50824E-01,
#       sn2n(j) : material macroscopic n,2n cross section
  sn2n(1)      = 1.78921E-08, 1.52664E-13, 0.00000E+00,
#       scatt(j,i) : total scattering cross section into group i from
#                    groups j.
  scatt(1, 1) = 2.37640E-01,
  scatt(1, 2) = 3.77678E-01, 5.37956E-02,
  scatt(1, 3) = 5.76786E-01, 6.83177E-03, 1.25172E-05,
 $end
#
# (15) cradp
#
 $isocomp
#       cisot : isotope label
  namiso = "cradp ",
#       sigc(j) : n,gamma cross sections for isotope
  sigc(1)      = 2.98583E-04, 3.01225E-04, 1.63768E-03,
#       totpl(j) : p-l weighted total crosss sections for isotope
  totpl(1)     = 1.04985E-01, 1.75437E-01, 4.97998E-01,
#       strpl(j) : p-l moments of transport cross sections for isotope
  strpl(1)     = 9.80208E-02, 1.48686E-01, 4.00862E-01,
#       sn2n(j) : material macroscopic n,2n cross section
  sn2n(1)      = 3.37201E-07, 2.29423E-20, 0.00000E+00,
#       scatt(j,i) : total scattering cross section into group i from
#                    groups j.
  scatt(1, 1) = 1.23696E-01,
  scatt(1, 2) = 1.81659E-01, 7.43459E-03,
  scatt(1, 3) = 5.06175E-01, 1.39084E-03, 2.75379E-05,
 $end
#
# (16) crabs
#
 $isocomp
#       cisot : isotope label
  namiso = "crabs ",
#       sigc(j) : n,gamma cross sections for isotope
  sigc(1)      = 1.18377E-02, 5.07849E-02, 3.38762E-01,
#       totpl(j) : p-l weighted total crosss sections for isotope
  totpl(1)     = 1.71806E-01, 2.71816E-01, 7.49339E-01,
#       strpl(j) : p-l moments of transport cross sections for isotope
  strpl(1)     = 1.61062E-01, 2.57077E-01, 6.74097E-01,
#       sn2n(j) : material macroscopic n,2n cross section
  sn2n(1)      = 5.86599E-08, 1.36475E-20, 0.00000E+00,
#       scatt(j,i) : total scattering cross section into group i from
#                    groups j.
  scatt(1, 1) = 1.58906E-01,
  scatt(1, 2) = 2.30722E-01, 2.77331E-02,
  scatt(1, 3) = 4.22786E-01, 2.62964E-03, 1.33098E-05,
 $end
#
# (17) entno
#
 $isocomp
#       cisot : isotope label
  namiso = "entno ",
#       sigc(j) : n,gamma cross sections for isotope
  sigc(1)      = 3.20073E-05, 7.31399E-05, 6.51326E-04,
#       totpl(j) : p-l weighted total crosss sections for isotope
  totpl(1)     = 8.01808E-02, 1.06662E-01, 1.65135E-01,
#       strpl(j) : p-l moments of transport cross sections for isotope
  strpl(1)     = 7.32759E-02, 9.94728E-02, 1.24665E-01,
#       sn2n(j) : material macroscopic n,2n cross section
  sn2n(1)      = 3.22732E-09, 3.03814E-21, 0.00000E+00,
#       scatt(j,i) : total scattering cross section into group i from
#                    groups j.
  scatt(1, 1) = 7.95912E-02,
  scatt(1, 2) = 1.09033E-01, 1.14866E-02,
  scatt(1, 3) = 1.68722E-01, 1.48270E-03, 6.47792E-06,
 $end
#
# (18) gaspl
#
 $isocomp
#       cisot : isotope label
  namiso = "gaspl ",
#       sigc(j) : n,gamma cross sections for isotope
  sigc(1)      = 1.55681E-04, 3.00306E-04, 1.58960E-03,
#       totpl(j) : p-l weighted total crosss sections for isotope
  totpl(1)     = 8.27151E-02, 1.42948E-01, 3.40633E-01,
#       strpl(j) : p-l moments of transport cross sections for isotope
  strpl(1)     = 7.79833E-02, 1.14957E-01, 2.96713E-01,
#       sn2n(j) : material macroscopic n,2n cross section
  sn2n(1)      = 2.07777E-08, 1.90914E-20, 0.00000E+00,
#       scatt(j,i) : total scattering cross section into group i from
#                    groups j.
  scatt(1, 1) = 8.99363E-02,
  scatt(1, 2) = 1.47083E-01, 8.03962E-03,
  scatt(1, 3) = 3.44717E-01, 1.23041E-03, 1.36702E-05,
 $end
#
# (19) hlhed
#
 $isocomp
#       cisot : isotope label
  namiso = "hlhed ",
#       sigc(j) : n,gamma cross sections for isotope
  sigc(1)      = 9.32138E-05, 2.04103E-04, 1.23288E-03,
```

```
file:magimk3_nsmple_inp

#       totpl(j) : p-1 weighted total crosss sections for isotope
 totpl(1)     = 9.54044E-02, 1.43278E-01, 2.99803E-01,
#       strpl(j) : p-1 moments of transport cross sections for isotope
 strpl(1)     = 9.01766E-02, 1.25962E-01, 2.39979E-01,
#       sn2n(j) : material macroscopic n,2n cross section
 sn2n(1)      = 5.10250E-09, 1.11947E-20, 0.00000E+00,
#       scatt(j,i) : total scattering cross section into group i from
#                    groups j.
 scatt(1, 1) = 9.67178E-02,
 scatt(1, 2) = 1.47001E-01, 1.27482E-02,
 scatt(1, 3) = 3.04879E-01, 1.48960E-03, 9.99301E-06,
 $end
#
# (20) inlsd
#
 $isocomp
#       cisot : isotope label
 namiso = "inlsd ",
#       sigc(j) : n,gamma cross sections for isotope
 sigc(1)      = 3.86756E-04, 8.05630E-04, 6.31011E-03,
#       totpl(j) : p-1 weighted total crosss sections for isotope
 totpl(1)     = 1.54101E-01, 3.17321E-01, 6.35492E-01,
#       strpl(j) : p-1 moments of transport cross sections for isotope
 strpl(1)     = 1.46202E-01, 2.39679E-01, 5.85515E-01,
#       sn2n(j) : material macroscopic n,2n cross section
 sn2n(1)      = 1.01712E-07, 3.34264E-12, 0.00000E+00,
#       scatt(j,i) : total scattering cross section into group i from
#                    groups j.
 scatt(1, 1) = 1.69464E-01,
 scatt(1, 2) = 3.24112E-01, 1.36049E-02,
 scatt(1, 3) = 6.38286E-01, 3.56364E-03, 2.23844E-05,
 $end
#
# (21) inusd
#
 $isocomp
#       cisot : isotope label
 namiso = "inusd ",
#       sigc(j) : n,gamma cross sections for isotope
 sigc(1)      = 3.71400E-04, 7.63505E-04, 4.39122E-03,
#       totpl(j) : p-1 weighted total crosss sections for isotope
 totpl(1)     = 1.54793E-01, 3.04822E-01, 6.74383E-01,
#       strpl(j) : p-1 moments of transport cross sections for isotope
 strpl(1)     = 1.46921E-01, 2.32988E-01, 6.07839E-01,
#       sn2n(j) : material macroscopic n,2n cross section
 sn2n(1)      = 7.35686E-08, 3.66490E-12, 0.00000E+00,
#       scatt(j,i) : total scattering cross section into group i from
#                    groups j.
 scatt(1, 1) = 1.69889E-01,
 scatt(1, 2) = 3.12652E-01, 1.35578E-02,
 scatt(1, 3) = 6.80234E-01, 2.84708E-03, 2.16584E-05,
 $end
#
# (22) nlsld
#
 $isocomp
#       cisot : isotope label
 namiso = "nlsld ",
#       sigc(j) : n,gamma cross sections for isotope
 sigc(1)      = 7.44304E-04, 1.50020E-03, 1.06724E-02,
#       totpl(j) : p-1 weighted total crosss sections for isotope
 totpl(1)     = 4.01425E-01, 6.57451E-01, 1.44976E+00,
#       strpl(j) : p-1 moments of transport cross sections for isotope
 strpl(1)     = 3.55279E-01, 5.09556E-01, 1.22045E+00,
#       sn2n(j) : material macroscopic n,2n cross section
 sn2n(1)      = 2.31692E-08, 9.49279E-14, 0.00000E+00,
#       scatt(j,i) : total scattering cross section into group i from
#                    groups j.
 scatt(1, 1) = 4.42552E-01,
 scatt(1, 2) = 6.69685E-01, 2.91730E-02,
 scatt(1, 3) = 1.45825E+00, 6.72840E-03, 5.08213E-05,
 $end
#
# (23) ngspl
#
 $isocomp
#       cisot : isotope label
 namiso = "ngspl ",
#       sigc(j) : n,gamma cross sections for isotope
 sigc(1)      = 8.43201E-05, 1.66590E-04, 1.07196E-03,
#       totpl(j) : p-1 weighted total crosss sections for isotope
 totpl(1)     = 5.50678E-02, 8.84990E-02, 2.00927E-01,
#       strpl(j) : p-1 moments of transport cross sections for isotope
 strpl(1)     = 5.12796E-02, 7.15781E-02, 1.77356E-01,
#       sn2n(j) : material macroscopic n,2n cross section
 sn2n(1)      = 4.01018E-09, 1.24482E-13, 0.00000E+00,
#       scatt(j,i) : total scattering cross section into group i from
#                    groups j.
 scatt(1, 1) = 5.87140E-02,
 scatt(1, 2) = 9.06975E-02, 6.00001E-03,
 scatt(1, 3) = 2.03217E-01, 9.57484E-04, 8.68451E-06,
 $end
#
# (24) nhlhd
#
 $isocomp
#       cisot : isotope label
 namiso = "nhlhd ",
#       sigc(j) : n,gamma cross sections for isotope
 sigc(1)      = 9.23465E-05, 2.18147E-04, 1.32285E-03,
#       totpl(j) : p-1 weighted total crosss sections for isotope
 totpl(1)     = 9.71358E-02, 1.50003E-01, 2.93939E-01,
#       strpl(j) : p-1 moments of transport cross sections for isotope
 strpl(1)     = 9.19413E-02, 1.31392E-01, 2.35940E-01,
#       sn2n(j) : material macroscopic n,2n cross section
 sn2n(1)      = 3.46822E-09, 1.11940E-20, 0.00000E+00,
#       scatt(j,i) : total scattering cross section into group i from
#                    groups j.
 scatt(1, 1) = 9.76067E-02,
 scatt(1, 2) = 1.53034E-01, 1.35551E-02,
 scatt(1, 3) = 2.98726E-01, 2.03981E-03, 9.49828E-06,
 $end
#
# (25) mtrix
#
 $isocomp
#       cisot : isotope label
 namiso = "mtrix ",
#       sigc(j) : n,gamma cross sections for isotope
 sigc(1)      = 8.60238E-05, 1.81062E-04, 9.61422E-04,
#       totpl(j) : p-1 weighted total crosss sections for isotope
 totpl(1)     = 9.42303E-02, 1.40592E-01, 2.95943E-01,
#       strpl(j) : p-1 moments of transport cross sections for isotope
 strpl(1)     = 8.78053E-02, 1.24669E-01, 2.28625E-01,
#       sn2n(j) : material macroscopic n,2n cross section
 sn2n(1)      = 1.86694E-08, 1.13272E-20, 0.00000E+00,
#       scatt(j,i) : total scattering cross section into group i from
#                    groups j.
 scatt(1, 1) = 9.93491E-02,
 scatt(1, 2) = 1.43755E-01, 1.06341E-02,
```

```
  scatt(1, 3) = 3.01638E-01, 1.76512E-03, 1.25199E-05,
 $end
#
# (26) lcrdp
#
 $isocomp
#        cisot : isotope label
  namiso = "lcrdp ",
#        sigc(j) : n,gamma cross sections for isotope
  sigc(1)      = 7.10451E-05, 1.05168E-04, 8.68852E-04,
#        totpl(j) : p-l weighted total crosss sections for isotope
  totpl(1)     = 8.07209E-02, 1.16734E-01, 2.25055E-01,
#        strpl(j) : p-l moments of transport cross sections for isotope
  strpl(1)     = 7.24351E-02, 1.07105E-01, 1.63298E-01,
#        sn2n(j) : material macroscopic n,2n cross section
  sn2n(1)      = 4.57558E-08, 5.98337E-21, 0.00000E+00,
#        scatt(j,i) : total scattering cross section into group i from
#                     groups j.
  scatt(1, 1) = 8.76592E-02,
  scatt(1, 2) = 1.19423E-01, 8.22099E-03,
  scatt(1, 3) = 2.29647E-01, 1.68049E-03, 9.96675E-06,
 $end
#
# (27) ucrdp
#
 $isocomp
#        cisot : isotope label
  namiso = "ucrdp ",
#        sigc(j) : n,gamma cross sections for isotope
  sigc(1)      = 1.17376E-04, 2.51877E-04, 1.50408E-03,
#        totpl(j) : p-l weighted total crosss sections for isotope
  totpl(1)     = 1.05406E-01, 1.61307E-01, 3.60645E-01,
#        strpl(j) : p-l moments of transport cross sections for isotope
  strpl(1)     = 9.96066E-02, 1.39468E-01, 2.91055E-01,
#        sn2n(j) : material macroscopic n,2n cross section
  sn2n(1)      = 7.40411E-09, 1.61076E-20, 0.00000E+00,
#        scatt(j,i) : total scattering cross section into group i from
#                     groups j.
  scatt(1, 1) = 1.08396E-01,
  scatt(1, 2) = 1.65319E-01, 1.34876E-02,
  scatt(1, 3) = 3.66429E-01, 1.79662E-03, 1.25579E-05,
 $end
#        end of data
```

付録5　中性子束計算モジュール出力例

――１８群・２４メッシュ／集合体モデル；制御棒引き抜き

――１８群・２４メッシュ／集合体モデル；制御棒全挿入

```
**** ISOTOPE NAME : TOTAL =   27 *****

          1         2         3         4         5         6         7         8         9        10
    -----------------------------------------------------------------------------------------------------
  1     CORE1     CORE2     CRIN3     CROT3     CORE4     CORE5     TYPEB     TYPEC     CMTYB     INSLT
 11     LSLD      USLD      RSLDC     NTSLD     CRADP     CRABS     ENTNO     GASPL     HLHED     INLSD
 21     INUSD     NLSLD     NGSPL     NHLHD     MTRIX     LCRDP     UCRDP

**** REGION NAME : TOTAL =   18 *****

          1         2         3         4         5         6         7         8         9        10
    -----------------------------------------------------------------------------------------------------
  1     KCORE1    KCORE2    KCOR3I    KCOR3O    KCORE4    KCORE5    KTYPEB    KTYPEC    KCMTYB    KINSLT
 11     KLSLD     KUSLD     KRSLDC    KNTSLD    KCRADP    KCRABS    KINUSD    KLCRDP

**** ISOTOPE NUMBER ASSIGNED TO REGION : TOTAL =   18 *****

          1    2    3    4    5    6    7    8    9   10   11   12   13   14   15   16   17   18   19   20
      -----------------------------------------------------------------------------------------------------
  1       1    2    3    4    5    6    7    8    9   10   11   12   13   14   15   16   21   26

**** SUBASSEBLY NAME : TOTAL =   13 *****

          1         2         3         4         5         6         7         8         9        10
    -----------------------------------------------------------------------------------------------------
  1   SKND1     SKND2     SKND3     SKND4     SKND5     SKND6     SKND7     SKND8     SKND9     SKND10
 11   SKND11    SKND12    SKND13

**** REGION NUMBER ASSIGNED TO SUBASSEBLY : TOTAL =  117 *****

 SNAME( 1) = SKND1    - >
          1    2    3    4    5    6    7    8    9   10   11   12   13   14   15   16   17   18   19   20
      -----------------------------------------------------------------------------------------------------
  1      11   11   10    7   10   12   12   12   12
 SNAME( 2) = SKND2    - >
          1    2    3    4    5    6    7    8    9   10   11   12   13   14   15   16   17   18   19   20
      -----------------------------------------------------------------------------------------------------
  1      11   11   10    8   10   12   12   12   12
 SNAME( 3) = SKND3    - >
          1    2    3    4    5    6    7    8    9   10   11   12   13   14   15   16   17   18   19   20
      -----------------------------------------------------------------------------------------------------
  1      11   11   10    1   10   12   12   12   12
 SNAME( 4) = SKND4    - >
          1    2    3    4    5    6    7    8    9   10   11   12   13   14   15   16   17   18   19   20
      -----------------------------------------------------------------------------------------------------
  1      11   11   10    2   10   12   12   12   12
 SNAME( 5) = SKND5    - >
          1    2    3    4    5    6    7    8    9   10   11   12   13   14   15   16   17   18   19   20
      -----------------------------------------------------------------------------------------------------
  1      11   11   10    4   10   12   12   12   12
 SNAME( 6) = SKND6    - >
          1    2    3    4    5    6    7    8    9   10   11   12   13   14   15   16   17   18   19   20
      -----------------------------------------------------------------------------------------------------
  1      18   18   18   15   15   15   16   16   16
 SNAME( 7) = SKND7    - >
          1    2    3    4    5    6    7    8    9   10   11   12   13   14   15   16   17   18   19   20
      -----------------------------------------------------------------------------------------------------
  1      11   11   10    3   10   12   12   12   12
 SNAME( 8) = SKND8    - >
```

	1	2	3	4	5	6	7	8	9	10	11	12	13	14	15	16	17	18	19	20
1	11	11	10	9	10	12	12	12	12											

SNAME(9) = SKND9 - >

	1	2	3	4	5	6	7	8	9	10	11	12	13	14	15	16	17	18	19	20
1	11	11	10	5	10	12	12	12	12											

SNAME(10) = SKND10 - >

	1	2	3	4	5	6	7	8	9	10	11	12	13	14	15	16	17	18	19	20
1	13	13	13	13	13	13	13	13	17											

SNAME(11) = SKND11 - >

	1	2	3	4	5	6	7	8	9	10	11	12	13	14	15	16	17	18	19	20
1	11	11	10	6	10	12	12	12	12											

SNAME(12) = SKND12 - >

	1	2	3	4	5	6	7	8	9	10	11	12	13	14	15	16	17	18	19	20
1	13	13	13	13	13	13	13	13	13											

SNAME(13) = SKND13 - >

	1	2	3	4	5	6	7	8	9	10	11	12	13	14	15	16	17	18	19	20
1	14	14	14	14	14	14	14	14	14											

**** SUBASSEMBLY BOX NAME : TOTAL = 331 *****

	1	2	3	4	5	6	7	8	9	10
1	000	1A1	1B1	1C1	1D1	1E1	1F1	2A1	2A2	2B1
11	2B2	2C1	2C2	2D1	2D2	2E1	2E2	2F1	2F2	3A1
21	3A2	3A3	3B1	3B2	3B3	3C1	3C2	3C3	3D1	3D2
31	3D3	3E1	3E2	3E3	3F1	3F2	3F3	4A1	4A2	4A3
41	4A4	4B1	4B2	4B3	4B4	4C1	4C2	4C3	4C4	4D1
51	4D2	4D3	4D4	4E1	4E2	4E3	4E4	4F1	4F2	4F3
61	4F4	5A1	5A2	5A3	5A4	5A5	5B1	5B2	5B3	5B4
71	5B5	5C1	5C2	5C3	5C4	5C5	5D1	5D2	5D3	5D4
81	5D5	5E1	5E2	5E3	5E4	5E5	5F1	5F2	5F3	5F4
91	5F5	6A1	6A2	6A3	6A4	6A5	6A6	6B1	6B2	6B3
101	6B4	6B5	6B6	6C1	6C2	6C3	6C4	6C5	6C6	6D1
111	6D2	6D3	6D4	6D5	6D6	6E1	6E2	6E3	6E4	6E5
121	6E6	6F1	6F2	6F3	6F4	6F5	6F6	7A1	7A2	7A3
131	7A4	7A5	7A6	7A7	7B1	7B2	7B3	7B4	7B5	7B6
141	7B7	7C1	7C2	7C3	7C4	7C5	7C6	7C7	7D1	7D2
151	7D3	7D4	7D5	7D6	7D7	7E1	7E2	7E3	7E4	7E5
161	7E6	7E7	7F1	7F2	7F3	7F4	7F5	7F6	7F7	8A1
171	8A2	8A3	8A4	8A5	8A6	8A7	8A8	8B1	8B2	8B3
181	8B4	8B5	8B6	8B7	8B8	8C1	8C2	8C3	8C4	8C5
191	8C6	8C7	8C8	8D1	8D2	8D3	8D4	8D5	8D6	8D7
201	8D8	8E1	8E2	8E3	8E4	8E5	8E6	8E7	8E8	8F1
211	8F2	8F3	8F4	8F5	8F6	8F7	8F8	9A1	9A2	9A3
221	9A4	9A5	9A6	9A7	9A8	9A9	9B1	9B2	9B3	9B4
231	9B5	9B6	9B7	9B8	9B9	9C1	9C2	9C3	9C4	9C5
241	9C6	9C7	9C8	9C9	9D1	9D2	9D3	9D4	9D5	9D6
251	9D7	9D8	9D9	9E1	9E2	9E3	9E4	9E5	9E6	9E7
261	9E8	9E9	9F1	9F2	9F3	9F4	9F5	9F6	9F7	9F8
271	9F9	10A1	10A2	10A3	10A4	10A5	10A6	10A7	10A8	10A9
281	10A10	10B1	10B2	10B3	10B4	10B5	10B6	10B7	10B8	10B9
291	10B10	10C1	10C2	10C3	10C4	10C5	10C6	10C7	10C8	10C9
301	10C10	10D1	10D2	10D3	10D4	10D5	10D6	10D7	10D8	10D9
311	10D10	10E1	10E2	10E3	10E4	10E5	10E6	10E7	10E8	10E9
321	10E10	10F1	10F2	10F3	10F4	10F5	10F6	10F7	10F8	10F9

331 10F10

**** SUBASSEMBLY NUMBER ASSIGNED TO BOX : TOTAL = 331 *****

	1	2	3	4	5	6	7	8	9	10	11	12	13	14	15	16	17	18	19	20
1	1	3	2	3	2	3	2	4	4	4	4	4	4	4	4	4	4	4	4	5
21	6	5	5	6	7	5	8	7	5	6	5	5	6	7	5	1	7	9	9	9
41	9	9	9	9	9	9	9	9	9	9	9	9	9	9	9	9	9	9	9	9
61	9	11	11	11	11	11	10	11	11	11	6	11	11	11	11	11	11	11	11	11
81	11	10	11	11	11	6	11	11	11	11	11	12	10	10	10	10	10	12	10	10
101	10	10	10	12	10	10	10	10	10	12	10	10	10	10	10	12	10	10	10	10
121	10	12	10	10	10	10	10	12	12	12	12	12	12	12	12	12	12	12	12	12
141	12	12	12	12	12	12	12	12	12	12	12	12	12	12	12	12	12	12	12	12
161	12	12	12	12	12	12	12	12	12	12	12	12	12	12	12	12	12	12	12	12
181	12	12	12	12	12	12	12	12	12	12	12	12	12	12	12	12	12	12	12	12
201	12	12	12	12	12	12	12	12	12	12	12	12	12	12	12	12	12	13	13	13
221	13	13	13	13	13	13	13	13	13	13	13	13	13	13	13	13	13	13	13	13
241	13	13	13	13	13	13	13	13	13	13	13	13	13	13	13	13	13	13	13	13
261	13	13	13	13	13	13	13	13	13	13	13	13	13	13	13	13	13	13	13	13
281	13	13	13	13	13	13	13	13	13	13	13	13	13	13	13	13	13	13	13	13
301	13	13	13	13	13	13	13	13	13	13	13	13	13	13	13	13	13	13	13	13
321	13	13	13	13	13	13	13	13	13	13	13									

**** SPECIAL DATA : TOTAL = 0 *****

**** MESH LOCATION OF 1ST DIMENSION : TOTAL = 130 *****

	1	2	3	4	5
1	0.00000E+00	1.18296E+00	2.36592E+00	3.54889E+00	4.73185E+00
6	5.91481E+00	7.09777E+00	8.28073E+00	9.46369E+00	1.06467E+01
11	1.18296E+01	1.30126E+01	1.41955E+01	1.53785E+01	1.65615E+01
16	1.77444E+01	1.89274E+01	2.01104E+01	2.12933E+01	2.24763E+01
21	2.36592E+01	2.48422E+01	2.60252E+01	2.72081E+01	2.83911E+01
26	2.95740E+01	3.07570E+01	3.19400E+01	3.31229E+01	3.43059E+01
31	3.54889E+01	3.66718E+01	3.78548E+01	3.90377E+01	4.02207E+01
36	4.14037E+01	4.25866E+01	4.37696E+01	4.49525E+01	4.61355E+01
41	4.73185E+01	4.85014E+01	4.96844E+01	5.08674E+01	5.20503E+01
46	5.32333E+01	5.44162E+01	5.55992E+01	5.67822E+01	5.79651E+01
51	5.91481E+01	6.03311E+01	6.15140E+01	6.26970E+01	6.38799E+01
56	6.50629E+01	6.62459E+01	6.74288E+01	6.86118E+01	6.97947E+01
61	7.09777E+01	7.21607E+01	7.33436E+01	7.45266E+01	7.57096E+01
66	7.68925E+01	7.80755E+01	7.92584E+01	8.04414E+01	8.16244E+01
71	8.28073E+01	8.39903E+01	8.51733E+01	8.63562E+01	8.75392E+01
76	8.87221E+01	8.99051E+01	9.10881E+01	9.22710E+01	9.34540E+01
81	9.46369E+01	9.58199E+01	9.70029E+01	9.81858E+01	9.93688E+01
86	1.00552E+02	1.01735E+02	1.02918E+02	1.04101E+02	1.05284E+02
91	1.06467E+02	1.07650E+02	1.08832E+02	1.10015E+02	1.11198E+02
96	1.12381E+02	1.13564E+02	1.14747E+02	1.15930E+02	1.17113E+02
101	1.18296E+02	1.19479E+02	1.20662E+02	1.21845E+02	1.23028E+02
106	1.24211E+02	1.25394E+02	1.26577E+02	1.27760E+02	1.28943E+02
111	1.30126E+02	1.31309E+02	1.32492E+02	1.33675E+02	1.34858E+02
116	1.36041E+02	1.37224E+02	1.38407E+02	1.39589E+02	1.40772E+02
121	1.41955E+02	1.43138E+02	1.44321E+02	1.45504E+02	1.46687E+02
126	1.47870E+02	1.49053E+02	1.50236E+02	1.51419E+02	1.52602E+02

**** MESH LOCATION OF 2ND DIMENSION : TOTAL = 85 *****

1	2	3	4	5

1	0.00000E+00	2.04895E+00	4.09790E+00	6.14685E+00	8.19580E+00
6	1.02448E+01	1.22937E+01	1.43427E+01	1.63916E+01	1.84406E+01
11	2.04895E+01	2.25385E+01	2.45874E+01	2.66364E+01	2.86853E+01
16	3.07343E+01	3.27832E+01	3.48322E+01	3.68811E+01	3.89301E+01
21	4.09790E+01	4.30280E+01	4.50769E+01	4.71259E+01	4.91748E+01
26	5.12238E+01	5.32727E+01	5.53217E+01	5.73706E+01	5.94196E+01
31	6.14685E+01	6.35175E+01	6.55664E+01	6.76154E+01	6.96643E+01
36	7.17133E+01	7.37622E+01	7.58112E+01	7.78601E+01	7.99091E+01
41	8.19580E+01	8.40070E+01	8.60559E+01	8.81049E+01	9.01538E+01
46	9.22028E+01	9.42517E+01	9.63007E+01	9.83496E+01	1.00399E+02
51	1.02448E+02	1.04496E+02	1.06545E+02	1.08594E+02	1.10643E+02
56	1.12692E+02	1.14741E+02	1.16790E+02	1.18839E+02	1.20888E+02
61	1.22937E+02	1.24986E+02	1.27035E+02	1.29084E+02	1.31133E+02
66	1.33182E+02	1.35231E+02	1.37280E+02	1.39329E+02	1.41378E+02
71	1.43427E+02	1.45475E+02	1.47524E+02	1.49573E+02	1.51622E+02
76	1.53671E+02	1.55720E+02	1.57769E+02	1.59818E+02	1.61867E+02
81	1.63916E+02	1.65965E+02	1.68014E+02	1.70063E+02	1.72112E+02

**** AXIAL MESH LOCATION : TOTAL = 10 *****

	1	2	3	4	5
1	0.00000E+00	1.90000E+01	2.15000E+01	2.27040E+01	7.33590E+01
6	7.45660E+01	8.05315E+01	9.55315E+01	9.80315E+01	1.04566E+02

**** REGION VOLUMES (CC) : TOTAL = 18 *****

	1	2	3	4	5
1	8.84002E+03	3.53599E+04	1.17867E+04	2.35733E+04	7.07186E+04
6	7.66106E+04	5.89337E+03	8.84002E+03	2.94670E+03	1.16333E+04
11	1.03656E+05	1.44627E+05	7.65336E+05	6.92451E+05	2.01826E+04
16	8.38822E+03	1.21626E+04	7.92411E+03		

```
             *****  REGION ASSIGNMENTS TO MESH INTERVALS  *****  - PAGE 1 -

            ((IREGN(I,J),I=1,MAXI),J=1,MAXJ)
                    REGION NUMBERS ASSIGNED TO MESH INTERVALS
                                         AXIAL POSITION : H(CM)=   0.00 -   19.00
 --- REMARKS ---
  :NO REGION
 1:KCORE1      2:KCORE2      3:KCOR3I      4:KCOR3O      5:KCORE4      6:KCORE5
 7:KTYPEB      8:KTYPEC      9:KCMTYB      A:KINSLT      B:KLSLD       C:KUSLD
 D:KRSLDC      E:KNTSLD      F:KCRADP      G:KCRABS      H:KINUSD      I:KLCRDP
  X-DIRECTION RANGE :  1 - 100
  ==>    ....+....1....+....2....+....3....+....4....+....5....+....6....+....7....+....8....+....9....+....0
    .                                                                  EEEEE
    .                                                                 EEEEEEE
    .                                                            EEEEEEEEEEEEEEEEE
    .                                                           EEEEEEEEEEEEEEEEEEE
   80                                                      EEEEEEEEEEEEEEEEEEEEEEEEEEEEE
    .                                                     EEEEEEEEEEEEEEEEEEEEEEEEEEEEEEE
    .                                                EEEEEEEEEEEEEEEEEEEEEEEEEEEEEEEEEEEEEEEEE
    .                                               EEEEEEEEEEEEEEEEEEEEEEEEEEEEEEEEEEEEEEEEEEE
    .                                          EEEEEEEEEEEEEEEEEEEEEEEEDDDDEEEEEEEEEEEEEEEEEEEEEEEEEE
    +                                         EEEEEEEEEEEEEEEEEEEEEEEEDDDDDDEEEEEEEEEEEEEEEEEEEEEEEEEE
    .                                    EEEEEEEEEEEEEEEEEEEEEEEEDDDDDDDDDDDDDDDDDEEEEEEEEEEEEEEEEEEEEEEEEE
    .                                   EEEEEEEEEEEEEEEEEEEEEEEEDDDDDDDDDDDDDDDDDDDEEEEEEEEEEEEEEEEEEEEEEEEE
    .                              EEEEEEEEEEEEEEEEEEEEEEEEDDDDDDDDDDDDDDDDDDDDDDDDDDDDDEEEEEEEEEEEEEEEEEEEEE
    .                             EEEEEEEEEEEEEEEEEEEEEEEEDDDDDDDDDDDDDDDDDDDDDDDDDDDDDDDEEEEEEEEEEEEEEEEEEEE
   70                        EEEEEEEEEEEEEEEEEEEEEEEEDDDDDDDDDDDDDDDDDDDDDDDDDDDDDDDDDDDDDDDDDEEEEEEEEEEEEEEE
    .                       EEEEEEEEEEEEEEEEEEEEEEEEDDDDDDDDDDDDDDDDDDDDDDDDDDDDDDDDDDDDDDDDDDEEEEEEEEEEEEEEE
    .                  EEEEEEEEEEEEEEEEEEEEEEEEDDDDDDDDDDDDDDDDDDDDDDDDDDDDDDDDDDDDDDDDDDDDDDDDDDDDEEEEEEEEEE
    .                 EEEEEEEEEEEEEEEEEEEEEEEEDDDDDDDDDDDDDDDDDDDDDDDDDDDDDDDDDDDDDDDDDDDDDDDDDDDDDDEEEEEEEEE
    .            EEEEEEEEEEEEEEEEEEEEEEEEDDDDDDDDDDDDDDDDDDDDDDDDDDDDDDDDDDDDDDDDDDDDDDDDDDDDDDDDDDDDDDDDDEEE
    +           EEEEEEEEEEEEEEEEEEEEEEEEDDDDDDDDDDDDDDDDDDDDDDDDDDDDDDDDDDDDDDDDDDDDDDDDDDDDDDDDDDDDDDDDDDDEE
    .      EEEEEEEEEEEEEEEEEEEEEEEEDDDDDDDDDDDDDDDDDDDDDDDDDDDDDDDDDDDDBBBBBDDDDDDDDDDDDDDDDDDDDDDDDDDDDDDDDD
    .     EEEEEEEEEEEEEEEEEEEEEEEEDDDDDDDDDDDDDDDDDDDDDDDDDDDDDDDDDDDDBBBBBBDDDDDDDDDDDDDDDDDDDDDDDDDDDDDDDDD
    .     EEEEEEEEEEEEEEEEEEDDDDDDDDDDDDDDDDDDDDDDDDDDDDDDDDDDDDDBBBBBBBBBBBBBBBBBDDDDDDDDDDDDDDDDDDDDDDDDDDD
    .      EEEEEEEEEEEEEEEEDDDDDDDDDDDDDDDDDDDDDDDDDDDDDDDDDDDDDBBBBBBBBBBBBBBBBBBBDDDDDDDDDDDDDDDDDDDDDDDDDD
   60      EEEEEEEEEEEEDDDDDDDDDDDDDDDDDDDDDDDDDDDDDDDDDDDDBBBBBBBBBBBBBBBBBBBBBBBBBBBBBDDDDDDDDDDDDDDDDDDDDD
    .     EEEEEEEEEEEEDDDDDDDDDDDDDDDDDDDDDDDDDDDDDDDDDDDDBBBBBBBBBBBBBBBBBBBBBBBBBBBBBBBDDDDDDDDDDDDDDDDDDDD
    .     EEEEEEEEEEEEDDDDDDDDDDDDDDDDDDDDDDDDDDDDDDDDBBBBBBBBBBBBBBBBBBBBBBBBBBBBBBBBBBBBBBBBDDDDDDDDDDDDDDD
    .      EEEEEEEEEEEEDDDDDDDDDDDDDDDDDDDDDDDDDDDDDDBBBBBBBBBBBBBBBBBBBBBBBBBBBBBBBBBBBBBBBBBDDDDDDDDDDDDDDD
    .      EEEEEEEEEEEEDDDDDDDDDDDDDDDDDDDDDDDDDBBBBBBBBBBBBBBBBBBBBBBBBBBBBBBBBBBBBBBBBBBBBBBBBBBBBDDDDDDDDD
    +     EEEEEEEEEEEEDDDDDDDDDDDDDDDDDDDDDDDDDBBBBBBBBBBBBBBBBBBBBBBBBBBBBBBBBBBBBBBBBBBBBBBBBBBBBBBDDDDDDDD
    .     EEEEEEEEEEEEDDDDDDDDDDDDDDDDDDDDBBBBBBBBBBBBBBBBBBBBBBBBBBBBBBBBBBBIIIIBBBBBBBBBBBBBBBBBBBBDDDDDDDD
    .      EEEEEEEEEEEEDDDDDDDDDDDDDDDDDBBBBBBBBBBBBBBBBBBBBBBBBBBBBBBBBBBBBIIIIIIBBBBBBBBBBBBBBBBBBDDDDDDDDD
    .      EEEEEEEEEEEEDDDDDDDDDDDDDDDDDBBBBBBBBBBBBBBBBBBBBBBBBBBBBBBBBBBBBIIIIIIIBBBBBBBBBBBBBBBBBBDDDDDDDD
    .     EEEEEEEEEEEEDDDDDDDDDDDDDDDDDDDBBBBBBBBBBBBBBBBBBBBBBBBBBBBBBBBBBBBIIIIBBBBBBBBBBBBBBBBBBBBDDDDDDDD
   50     EEEEEEEEEEEEDDDDDDDDDDDDDDDDDDDIIIIBBBBBBBBBBBBBBBBBBBBBBBBBBBBBBBBBBBBBBBBBBBBBBBBBBBBBBBBBBBBBBBBDDD
    .      EEEEEEEEEEEEDDDDDDDDDDDDDDDDDIIIIIIBBBBBBBBBBBBBBBBBBBBBBBBBBBBBBBBBBBBBBBBBBBBBBBBBBBBBBBBBBBBBBBBDD
    .      EEEEEEEEEEEEDDDDDDDDDDDDDDDDDIIIIIIIBBBBBBBBBBBBBBBBBBBBBBBBBBBBBBBBBBBBBBBBBBBBBBBBBBBBBBBBBBBBBBBDD
    .     EEEEEEEEEEEEDDDDDDDDDDDDDDDDDDDIIIIBBBBBBBBBBBBBBBBBBBBBBBBBBBBBBBBBBBBBBBBBBBBBBBBBBBBBBBBBBBBBBBBDDD
    .     EEEEEEEEEEEEDDDDDDDDDDDDDDDDDDDBBBBBBBBBBBBBBBBBBBBBBBBBBBBBBBBBBBBBBBBBBBBBBBBIIIIIBBBBBBBBBBBBDDD
    +      EEEEEEEEEEEEDDDDDDDDDDDDDDDDDBBBBBBBBBBBBBBBBBBBBBBBBBBBBBBBBBBBBBBBBBBBBBBBBIIIIIIBBBBBBBBBBBBBDD
    .      EEEEEEEEEEEEDDDDDDDDDDDDDDDDDBBBBBBBBBBBBBBBBBBBBBBBBBBBBBBBBBBBBBBBBBBBBBBBBIIIIIIIBBBBBBBBBBBBDD
    .     EEEEEEEEEEEEDDDDDDDDDDDDDDDDDDDBBBBBBBBBBBBBBBBBBBBBBBBBBBBBBBBBBBBBBBBBBBBBBBBIIIIIBBBBBBBBBBBBDDD
    .     EEEEEEEEEEEEDDDDDDDDDDDDDDDDDDDBBBBBBBBBBBBIIIIIBBBBBBBBBBBBBBBBBBBBBBBBBBBBBBBBBBBBBBBBBBBBBBBBDDD
    .      EEEEEEEEEEEEDDDDDDDDDDDDDDDDDBBBBBBBBBBBBBIIIIIIBBBBBBBBBBBBBBBBBBBBBBBBBBBBBBBBBBBBBBBBBBBBBBBBDD
   40      EEEEEEEEEEEEDDDDDDDDDDDDDDDDDBBBBBBBBBBBBIIIIIIIBBBBBBBBBBBBBBBBBBBBBBBBBBBBBBBBBBBBBBBBBBBBBBBBDD
    .     EEEEEEEEEEEEDDDDDDDDDDDDDDDDDDDBBBBBBBBBBBBIIIIIBBBBBBBBBBBBBBBBBBBBBBBBBBBBBBBBBBBBBBBBBBBBBBBBDDD
    .     EEEEEEEEEEEEDDDDDDDDDDDDDDDDDDDBBBBBBBBBBBBBBBBBBBBBBBBBBBBBBBBBBBBBBBBBBBBBBBBBBBBBBBBBBBBBIIIIDDD
    .      EEEEEEEEEEEEDDDDDDDDDDDDDDDDDBBBBBBBBBBBBBBBBBBBBBBBBBBBBBBBBBBBBBBBBBBBBBBBBBBBBBBBBBBBIIIIIIIDD
```

```
 .   EEEEEEEEEEEEDDDDDDDDDDDDDDDDDDBBBBBBBBBBBBBBBBBBBBBBBBBBBBBBBBBBBBBBBBBBBBBBBBBBBBBBBBBBBBBBBBBBBBBBBIIIIIIIDD
 +  EEEEEEEEEEEEDDDDDDDDDDDDDDDDDDBBBBBBBBBBBBBBBBBBBBBBBBBBBBBBBBBBBBBBBBBBBBBBBBBBBBBBBBBBBBBBBBBBBBBBBBIIIIIIDDD
 .  EEEEEEEEEEEEDDDDDDDDDDDDDDDDDDDDDDDDDDBBBBBBBBBBBBBBBBBBBBBIIIIIBBBBBBBBBBBBBBBBBBBBBBBBBBBBBBBBBBBBBBBBBBDDD
 .   EEEEEEEEEEEEDDDDDDDDDDDDDDDDDDDDDDDDDDBBBBBBBBBBBBBBBBBBBBIIIIIIIBBBBBBBBBBBBBBBBBBBBBBBBBBBBBBBBBBBBBBBBBDD
 .   EEEEEEEEEEEEDDDDDDDDDDDDDDDDDDDDDDDDDDBBBBBBBBBBBBBBBBBBBBIIIIIIIBBBBBBBBBBBBBBBBBBBBBBBBBBBBBBBBBBBBBBBBBDD
 .  EEEEEEEEEEEEDDDDDDDDDDDDDDDDDDDDDDDDDDBBBBBBBBBBBBBBBBBBBBIIIIIBBBBBBBBBBBBBBBBBBBBBBBBBBBBBBBBBBBBBBBBBBDDD
30  EEEEEEEEEEEEDDDDDDDDDDDDDDDDDDDDDDDDDDBBBBBBBBBBBBBBBBBBBBBBBBBBBBBBBBBBBBBBBBBBBBBBBBBBBBBBBBBBBBBBBBBDDDDDDDD
 .   EEEEEEEEEEEEDDDDDDDDDDDDDDDDDDDDDDDDDDBBBBBBBBBBBBBBBBBBBBBBBBBBBBBBBBBBBBBBBBBBBBBBBBBBBBBBBBBBBBBBBBDDDDDDDD
 .   EEEEEEEEEEEEDDDDDDDDDDDDDDDDDDDDDDDDDDBBBBBBBBBBBBBBBBBBBBBBBBBBBBBBBBBBBBBBBBBBBBBBBBBBBBBBBBBBBBBBBBDDDDDDDD
 .  EEEEEEEEEEEEDDDDDDDDDDDDDDDDDDDDDDDDDDBBBBBBBBBBBBBBBBBBBBBBBBBBBBBBBBBBBBBBBBBBBBBBBBBBBBBBBBBBBBBBBBDDDDDDDD
 .  EEEEEEEEEEEEDDDDDDDDDDDDDDDDDDDDDDDDDDBBBBBBBBBBBBBBBBBBBBBBBBBBBBBBBBBBBBBBBBBBBBBBBBBBBBBBBBBBBBBBBBDDDDDDDD
 +   EEEEEEEEEEEEDDDDDDDDDDDDDDDDDDDDDDDDDDBBBBBBBBBBBBBBBBBBBBBBBBBBBBBBBBBBBBBBBBBBBBBBBBBBBBBBBBBBBBBBBBDDDDDDDD
 .   EEEEEEEEEEEEEEEEEEDDDDDDDDDDDDDDDDDDDDDDDDDDDDDDDDDDDDDDDDBBBBBBBBBBBBBBBBBBBBBBBBBBBBBBBBBBBBBBBBBBBBBBBBDDDDDDDD
 .  EEEEEEEEEEEEEEEEEEEEEEEEDDDDDDDDDDDDDDDDDDDDDDDDDDDDDDDDDDDDDDDDBBBBBBBBBBBBBBBBBBBBBBBBBBBBBBBBBBBBBBBBBBDDDDDDDD
 .  EEEEEEEEEEEEEEEEEEEEEEEEDDDDDDDDDDDDDDDDDDDDDDDDDDDDDDDDDDDDDDDDBBBBBBBDDDDDDDDDDDDDDDDDDDDDDDDDDDDDDDDDDDDDDDDD
 .   EEEEEEEEEEEEEEEEEEEEEEEEEEDDDDDDDDDDDDDDDDDDDDDDDDDDDDDDDDDDDDDDDDDDBBBBBBDDDDDDDDDDDDDDDDDDDDDDDDDDDDDDDDDDDDDD
20        EEEEEEEEEEEEEEEEEEEEEEEEEEDDDDDDDDDDDDDDDDDDDDDDDDDDDDDDDDDDDDDDDDDDDDDDDDDDDDDDDDDDDDDDDDDDDDDDDDDDDDDDDDDEE
 .         EEEEEEEEEEEEEEEEEEEEEEEEEEDDDDDDDDDDDDDDDDDDDDDDDDDDDDDDDDDDDDDDDDDDDDDDDDDDDDDDDDDDDDDDDDDDDDDDDDDDDDDDDDEEE
 .              EEEEEEEEEEEEEEEEEEEEEEEEEEDDDDDDDDDDDDDDDDDDDDDDDDDDDDDDDDDDDDDDDDDDDDDDDDDDDDDDDDDDDDDDDDDDDDDDDDDDDDEEEEEEEE
 .               EEEEEEEEEEEEEEEEEEEEEEEEEEDDDDDDDDDDDDDDDDDDDDDDDDDDDDDDDDDDDDDDDDDDDDDDDDDDDDDDDDDDDDDDDDDDDDDDDDDDDEEEEEEEEE
 .                    EEEEEEEEEEEEEEEEEEEEEEEEEEDDDDDDDDDDDDDDDDDDDDDDDDDDDDDDDDDDDDDDDDDDDDDDDDDDDDDDDDDDDDDDDDDDDDDDDDEEEEEEEEEEEEEEE
 +                     EEEEEEEEEEEEEEEEEEEEEEEEEEDDDDDDDDDDDDDDDDDDDDDDDDDDDDDDDDDDDDDDDDDDDDDDDDDDDDDDDDDDDDDDDDDDDDDEEEEEEEEEEEEEEEE
 .                          EEEEEEEEEEEEEEEEEEEEEEEEEEDDDDDDDDDDDDDDDDDDDDDDDDDDDDDDDDDDDDDDDDDDDDDDDDDDDDDDDDDDDDDDDEEEEEEEEEEEEEEEEEEEE
 .                           EEEEEEEEEEEEEEEEEEEEEEEEEEDDDDDDDDDDDDDDDDDDDDDDDDDDDDDDDDDDDDDDDDDDDDDDDDDDDDDDDDDDDDDDEEEEEEEEEEEEEEEEEEEEEE
 .                                EEEEEEEEEEEEEEEEEEEEEEEEEEDDDDDDDDDDDDDDDDDDDDDDDDDDDDDDDDDDDDDDDDDDDDDDDDDDDDDDDDDEEEEEEEEEEEEEEEEEEEEEEEE
 .                                 EEEEEEEEEEEEEEEEEEEEEEEEEEDDDDDDDDDDDDDDDDDDDDDDDDDDDDDDDDDDDDDDDDDDDDDDDDDDDDDDDDEEEEEEEEEEEEEEEEEEEEEEEEE
10                                      EEEEEEEEEEEEEEEEEEEEEEEEEEDDDDDDDDDDDDDDDDDDDDDDDDDDDDDDDDDDDDDDDDDDDDDDDDDDDEEEEEEEEEEEEEEEEEEEEEEEEEEEE
 .                                       EEEEEEEEEEEEEEEEEEEEEEEEEEDDDDDDDDDDDDDDDDDDDDDDDDDDDDDDDDDDDDDDDDDDDDDDDDDDEEEEEEEEEEEEEEEEEEEEEEEEEEEEEE
 .                                            EEEEEEEEEEEEEEEEEEEE
```

```
*****  REGION ASSIGNMENTS TO MESH INTERVALS  *****  - PAGE 2 -

((IREGN(I,J),I=1,MAXI),J=1,MAXJ)
        REGION NUMBERS ASSIGNED TO MESH INTERVALS
                                AXIAL POSITION : H(CM)=   0.00 -   19.00
--- REMARKS ---
 :NO REGION
1:KCORE1     2:KCORE2     3:KCOR3I     4:KCOR3O     5:KCORE4     6:KCORE5
7:KTYPEB     8:KTYPEC     9:KCMTYB     A:KINSLT     B:KLSLD      C:KUSLD
D:KRSLDC     E:KNTSLD     F:KCRADP     G:KCRABS     H:KINUSD     I:KLCRDP
 X-DIRECTION RANGE :101 - 129
 ==>  ....+....1....+....2....+....3
    .
    .
    .
    .
   80
    .
    .
    .
    .
    +
    .
    .
    . EEE
    . EEEE
   70 EEEEEEEEE
    . EEEEEEEEEE
    . EEEEEEEEEEEEEEE
    . EEEEEEEEEEEEEEEE
    . EEEEEEEEEEEEEEEEEEEEE
    + EEEEEEEEEEEEEEEEEEEEEE
    . DDDEEEEEEEEEEEEEEEEEEEEEEEEE
    . DDDDEEEEEEEEEEEEEEEEEEEEEEEEE
    . DDDDDDDDDEEEEEEEEEEEEEEEEEEEE
    . DDDDDDDDDDEEEEEEEEEEEEEEEEEE
   60 DDDDDDDDDDDDDDDDEEEEEEEEEEEE
    . DDDDDDDDDDDDDDDDEEEEEEEEEEEE
    . DDDDDDDDDDDDDDDDEEEEEEEEEEEE
    . DDDDDDDDDDDDDDDDEEEEEEEEEEE
    . DDDDDDDDDDDDDDDDEEEEEEEEEEE
    + DDDDDDDDDDDDDDDDEEEEEEEEEEEE
    . DDDDDDDDDDDDDDDDEEEEEEEEEEEE
    . DDDDDDDDDDDDDDDDEEEEEEEEEEE
    . DDDDDDDDDDDDDDDDEEEEEEEEEEE
    . DDDDDDDDDDDDDDDDEEEEEEEEEEEE
   50 DDDDDDDDDDDDDDDDEEEEEEEEEEEE
    . DDDDDDDDDDDDDDDDEEEEEEEEEEE
    . DDDDDDDDDDDDDDDDEEEEEEEEEEE
    . DDDDDDDDDDDDDDDDEEEEEEEEEEEE
    . DDDDDDDDDDDDDDDDEEEEEEEEEEEE
    + DDDDDDDDDDDDDDDDEEEEEEEEEEE
    . DDDDDDDDDDDDDDDDEEEEEEEEEEE
    . DDDDDDDDDDDDDDDDEEEEEEEEEEEE
    . DDDDDDDDDDDDDDDDEEEEEEEEEEEE
    . DDDDDDDDDDDDDDDDEEEEEEEEEEE
   40 DDDDDDDDDDDDDDDDEEEEEEEEEEE
    . DDDDDDDDDDDDDDDDEEEEEEEEEEEE
    . DDDDDDDDDDDDDDDDEEEEEEEEEEEE
    . DDDDDDDDDDDDDDDDEEEEEEEEEEE
```

```
     . DDDDDDDDDDDDDDDDEEEEEEEEEEEE
     + DDDDDDDDDDDDDDDDEEEEEEEEEEEE
     . DDDDDDDDDDDDDDDDEEEEEEEEEEEE
     . DDDDDDDDDDDDDDDDEEEEEEEEEEEE
     . DDDDDDDDDDDDDDDDEEEEEEEEEEEE
     . DDDDDDDDDDDDDDDDEEEEEEEEEEEE
    30 DDDDDDDDDDDDDDDDEEEEEEEEEEEE
     . DDDDDDDDDDDDDDDDEEEEEEEEEEEE
     . DDDDDDDDDDDDDDDDEEEEEEEEEEEE
     . DDDDDDDDDDDDDDDDEEEEEEEEEEEE
     . DDDDDDDDDDDDDDDDEEEEEEEEEEEE
     + DDDDDDDDDDDDDDDDEEEEEEEEEEEE
     . DDDDDDDDDDEEEEEEEEEEEEEEEEEE
     . DDDDDDDDDEEEEEEEEEEEEEEEEEEE
     . DDDDEEEEEEEEEEEEEEEEEEEEEEEE
     . DDDEEEEEEEEEEEEEEEEEEEEEEEEE
    20 EEEEEEEEEEEEEEEEEEEEEEEE
     . EEEEEEEEEEEEEEEEEEEEE
     . EEEEEEEEEEEEEEEE
     . EEEEEEEEEEEEEEE
     . EEEEEEEEEE
     + EEEEEEEEE
     . EEEE
     . EEE
     .
     .
    10
     .
     .
     .
     .
     +
     .
     .
     .
     .
==>  ....+....1....+....2....+....3
```

***** REGION ASSIGNMENTS TO MESH INTERVALS ***** - PAGE 1 -

```
((IREGN(I,J),I=1,MAXI),J=1,MAXJ)
      REGION NUMBERS ASSIGNED TO MESH INTERVALS
                         AXIAL POSITION : H(CM)=  19.00 -   21.50
--- REMARKS ---
 :NO REGION
1:KCORE1      2:KCORE2      3:KCOR3I      4:KCOR3O      5:KCORE4      6:KCORE5
7:KTYPEB      8:KTYPEC      9:KCMTYB      A:KINSLT      B:KLSLD       C:KUSLD
D:KRSLDC      E:KNTSLD      F:KCRADP      G:KCRABS      H:KINUSD      I:KLCRDP
 X-DIRECTION RANGE :  1 - 100
 ==>  ....+....1....+....2....+....3....+....4....+....5....+....6....+....7....+....8....+....9....+....0
    .                                                               EEEEE
    .                                                              EEEEEEE
    .                                                         EEEEEEEEEEEEEEEEE
    .                                                        EEEEEEEEEEEEEEEEEEE
   80                                                   EEEEEEEEEEEEEEEEEEEEEEEEEEEEE
    .                                                  EEEEEEEEEEEEEEEEEEEEEEEEEEEEEEE
    .                                             EEEEEEEEEEEEEEEEEEEEEEEEEEEEEEEEEEEEEEEEE
    .                                            EEEEEEEEEEEEEEEEEEEEEEEEEEEEEEEEEEEEEEEEEEE
    .                                       EEEEEEEEEEEEEEEEEEEEEEEEDDDDDEEEEEEEEEEEEEEEEEEEEEEEE
    +                                      EEEEEEEEEEEEEEEEEEEEEEEEDDDDDDDEEEEEEEEEEEEEEEEEEEEEEEE
    .                                 EEEEEEEEEEEEEEEEEEEEEEEEDDDDDDDDDDDDDDDDDEEEEEEEEEEEEEEEEEEEEEEE
    .                                EEEEEEEEEEEEEEEEEEEEEEEEDDDDDDDDDDDDDDDDDDDEEEEEEEEEEEEEEEEEEEEEEEE
    .                           EEEEEEEEEEEEEEEEEEEEEEEEDDDDDDDDDDDDDDDDDDDDDDDDDDDDDEEEEEEEEEEEEEEEEEEEEE
    .                          EEEEEEEEEEEEEEEEEEEEEEEEDDDDDDDDDDDDDDDDDDDDDDDDDDDDDDDEEEEEEEEEEEEEEEEEEEE
   70                     EEEEEEEEEEEEEEEEEEEEEEEEDDDDDDDDDDDDDDDDDDDDDDDDDDDDDDDDDDDDDDDDDEEEEEEEEEEEEEEE
    .                    EEEEEEEEEEEEEEEEEEEEEEEEDDDDDDDDDDDDDDDDDDDDDDDDDDDDDDDDDDDDDDDDDDDEEEEEEEEEEEEEE
    .               EEEEEEEEEEEEEEEEEEEEEEEEDDDDDDDDDDDDDDDDDDDDDDDDDDDDDDDDDDDDDDDDDDDDDDDDDDDDDEEEEEEEEE
    .              EEEEEEEEEEEEEEEEEEEEEEEEDDDDDDDDDDDDDDDDDDDDDDDDDDDDDDDDDDDDDDDDDDDDDDDDDDDDDDDEEEEEEEE
    .         EEEEEEEEEEEEEEEEEEEEEEEEDDDDDDDDDDDDDDDDDDDDDDDDDDDDDDDDDDDDDDDDDDDDDDDDDDDDDDDDDDDDDDDDDEEE
    +        EEEEEEEEEEEEEEEEEEEEEEEEDDDDDDDDDDDDDDDDDDDDDDDDDDDDDDDDDDDDDDDDDDDDDDDDDDDDDDDDDDDDDDDDDDDEE
    .   EEEEEEEEEEEEEEEEEEEEEEEEDDDDDDDDDDDDDDDDDDDDDDDDDDDDDDDDDDDDDBBBBDDDDDDDDDDDDDDDDDDDDDDDDDDDDDDDDD
    .  EEEEEEEEEEEEEEEEEEEEEEEEDDDDDDDDDDDDDDDDDDDDDDDDDDDDDDDDDDDDDBBBBBBDDDDDDDDDDDDDDDDDDDDDDDDDDDDDDDD
    .  EEEEEEEEEEEEEEEEEEEDDDDDDDDDDDDDDDDDDDDDDDDDDDDDDDDDDDDBBBBBBBBBBBBBBBBBDDDDDDDDDDDDDDDDDDDDDDDDDDD
    .   EEEEEEEEEEEEEEEEEDDDDDDDDDDDDDDDDDDDDDDDDDDDDDDDDDDDDBBBBBBBBBBBBBBBBBBBDDDDDDDDDDDDDDDDDDDDDDDDDD
   60   EEEEEEEEEEEEDDDDDDDDDDDDDDDDDDDDDDDDDDDDDDDDDDDDBBBBBBBBBBBBBBBBBBBBBBBBBBBBBDDDDDDDDDDDDDDDDDDDDD
    .  EEEEEEEEEEEEDDDDDDDDDDDDDDDDDDDDDDDDDDDDDDDDDDDDBBBBBBBBBBBBBBBBBBBBBBBBBBBBBBBDDDDDDDDDDDDDDDDDDDD
    .  EEEEEEEEEEEEDDDDDDDDDDDDDDDDDDDDDDDDDDDDDDDBBBBBBBBBBBBBBBBBBBBBBBBBBBBBBBBBBBBBBBBBDDDDDDDDDDDDDDD
    .   EEEEEEEEEEEEDDDDDDDDDDDDDDDDDDDDDDDDDDDDDBBBBBBBBBBBBBBBBBBBBBBBBBBBBBBBBBBBBBBBBBBBDDDDDDDDDDDDDD
    .   EEEEEEEEEEEEDDDDDDDDDDDDDDDDDDDDDDDDBBBBBBBBBBBBBBBBBBBBBBBBBBBBBBBBBBBBBBBBBBBBBBBBBBBBBDDDDDDDDD
    +  EEEEEEEEEEEEDDDDDDDDDDDDDDDDDDDDDDDDDBBBBBBBBBBBBBBBBBBBBBBBBBBBBBBBBBBBBBBBBBBBBBBBBBBBBBBDDDDDDDD
    .  EEEEEEEEEEEEDDDDDDDDDDDDDDDDDDDBBBBBBBBBBBBBBBBBBBBBBBBBBBBBBBBBBBBIIIIIBBBBBBBBBBBBBBBBBBBDDDDDDDD
    .   EEEEEEEEEEEEDDDDDDDDDDDDDDDDDBBBBBBBBBBBBBBBBBBBBBBBBBBBBBBBBBBBBIIIIIIIBBBBBBBBBBBBBBBBBDDDDDDDDD
    .   EEEEEEEEEEEEDDDDDDDDDDDDDDDDDBBBBBBBBBBBBBBBBBBBBBBBBBBBBBBBBBBBBIIIIIIIBBBBBBBBBBBBBBBBBDDDDDDDDD
    .  EEEEEEEEEEEEDDDDDDDDDDDDDDDDDDDBBBBBBBBBBBBBBBBBBBBBBBBBBBBBBBBBBBBIIIIIBBBBBBBBBBBBBBBBBBBDDDDDDDD
   50  EEEEEEEEEEEEDDDDDDDDDDDDDDDDDDDIIIIIBBBBBBBBBBBBBBBBBBBBBBBBBBBBBBBBBBBBBBBBBBBBBBBBBBBBBBBBBBBBDDD
    .   EEEEEEEEEEEEDDDDDDDDDDDDDDDDDIIIIIIBBBBBBBBBBBBBBBBBBBBBBBBBBBBBBBBBBBBBBBBBBBBBBBBBBBBBBBBBBBBBDD
    .   EEEEEEEEEEEEDDDDDDDDDDDDDDDDDIIIIIIBBBBBBBBBBBBBBBBBBBBBBBBBBBBBBBBBBBBBBBBBBBBBBBBBBBBBBBBBBBBBDD
    .  EEEEEEEEEEEEDDDDDDDDDDDDDDDDDDDIIIIBBBBBBBBBBBBBBBBBBBBBBBBBBBBBBBBBBBBBBBBBBBBBBBBBBBBBBBBBBBBBDDD
    .  EEEEEEEEEEEEDDDDDDDDDDDDDDDDDDDBBBBBBBBBBBBBBBBBBBBBBBBBBBBBBBBBBBBBBBBBBBBBBBBIIIIIBBBBBBBBBBBBDDD
    +   EEEEEEEEEEEEDDDDDDDDDDDDDDDDDBBBBBBBBBBBBBBBBBBBBBBBBBBBBBBBBBBBBBBBBBBBBBBBBIIIIIIIBBBBBBBBBBBBDD
    .   EEEEEEEEEEEEDDDDDDDDDDDDDDDDDBBBBBBBBBBBBBBBBBBBBBBBBBBBBBBBBBBBBBBBBBBBBBBBBIIIIIIIBBBBBBBBBBBBDD
    .  EEEEEEEEEEEEDDDDDDDDDDDDDDDDDDDBBBBBBBBBBBBBBBBBBBBBBBBBBBBBBBBBBBBBBBBBBBBBBBBIIIIIBBBBBBBBBBBBDDD
    .  EEEEEEEEEEEEDDDDDDDDDDDDDDDDDDDBBBBBBBBBBBBIIIIIBBBBBBBBBBBBBBBBBBBBBBBBBBBBBBBBBBBBBBBBBBBBBBBBDDD
    .   EEEEEEEEEEEEDDDDDDDDDDDDDDDDDBBBBBBBBBBBBIIIIIIIBBBBBBBBBBBBBBBBBBBBBBBBBBBBBBBBBBBBBBBBBBBBBBBBDD
   40   EEEEEEEEEEEEDDDDDDDDDDDDDDDDDBBBBBBBBBBBBIIIIIIIBBBBBBBBBBBBBBBBBBBBBBBBBBBBBBBBBBBBBBBBBBBBBBBBDD
    .  EEEEEEEEEEEEDDDDDDDDDDDDDDDDDDDBBBBBBBBBBBBIIIIIBBBBBBBBBBBBBBBBBBBBBBBBBBBBBBBBBBBBBBBBBBBBBBBBDDD
    .  EEEEEEEEEEEEDDDDDDDDDDDDDDDDDDDBBBBBBBBBBBBBBBBBBBBBBBBBBBBBBBBBBBBBBBBBBBBBBBBBBBBBBBBBBBBIIIIIDDD
    .   EEEEEEEEEEEEDDDDDDDDDDDDDDDDDBBBBBBBBBBBBBBBBBBBBBBBBBBBBBBBBBBBBBBBBBBBBBBBBBBBBBBBBBBBBIIIIIIIDD
```

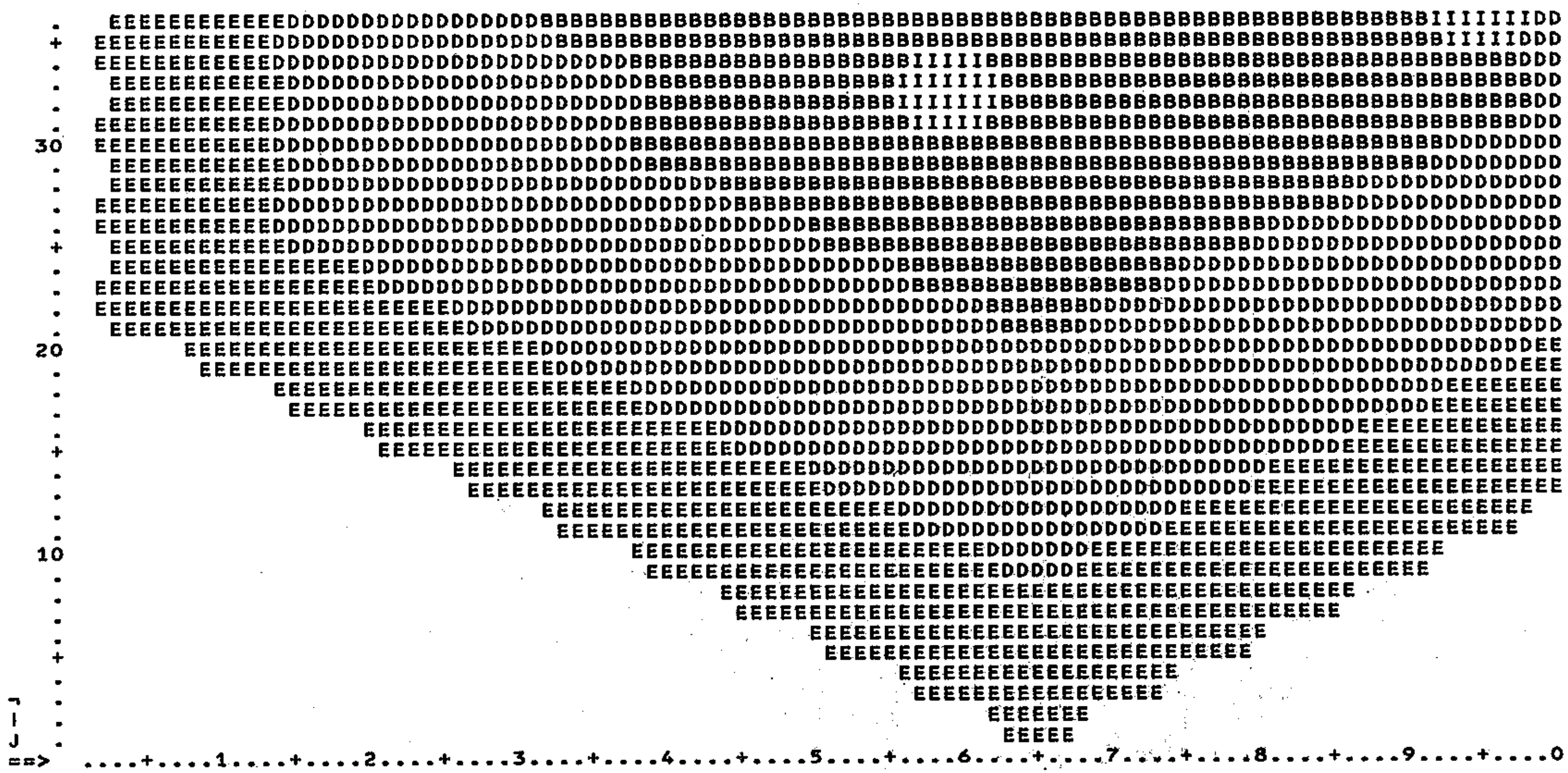
30
20
10
J-J
==>
1 2 3 4 5 6 7 8 9 0

```
              *****  REGION ASSIGNMENTS TO MESH INTERVALS  *****  - PAGE 2 -

             ((IREGN(I,J),I=1,MAXI),J=1,MAXJ)
                    REGION NUMBERS ASSIGNED TO MESH INTERVALS
                                        AXIAL POSITION : H(CM)=  19.00 -   21.50
--- REMARKS ---
 :NO REGION
1:KCORE1     2:KCORE2     3:KCOR3I     4:KCOR3O     5:KCORE4     6:KCORE5
7:KTYPEB     8:KTYPEC     9:KCMTYB     A:KINSLT     B:KLSLD      C:KUSLD
D:KRSLDC     E:KNTSLD     F:KCRADP     G:KCRABS     H:KINUSD     I:KLCRDP
 X-DIRECTION RANGE :101 - 129
 ==>  ....+....1....+....2....+....3
    .
    .
    .
    .
   80
    .
    .
    .
    .
    +
    .
    .
    . EEE
    . EEEE
   70 EEEEEEEEE
    . EEEEEEEEEE
    . EEEEEEEEEEEEEEE
    . EEEEEEEEEEEEEEEE
    . EEEEEEEEEEEEEEEEEEEEE
    + EEEEEEEEEEEEEEEEEEEEEE
    . DDDEEEEEEEEEEEEEEEEEEEEEEEEE
    . DDDDEEEEEEEEEEEEEEEEEEEEEEEEE
    . DDDDDDDDDEEEEEEEEEEEEEEEEEEEE
    . DDDDDDDDDDEEEEEEEEEEEEEEEEEE
   60 DDDDDDDDDDDDDDDEEEEEEEEEEEEE
    . DDDDDDDDDDDDDDDDEEEEEEEEEEEEE
    . DDDDDDDDDDDDDDDDEEEEEEEEEEEEE
    . DDDDDDDDDDDDDDDEEEEEEEEEEEEE
    . DDDDDDDDDDDDDDDEEEEEEEEEEEEE
    + DDDDDDDDDDDDDDDDEEEEEEEEEEEEE
    . DDDDDDDDDDDDDDDDEEEEEEEEEEEEE
    . DDDDDDDDDDDDDDDEEEEEEEEEEEEE
    . DDDDDDDDDDDDDDDEEEEEEEEEEEEE
    . DDDDDDDDDDDDDDDDEEEEEEEEEEEEE
   50 DDDDDDDDDDDDDDDDEEEEEEEEEEEEE
    . DDDDDDDDDDDDDDDDEEEEEEEEEEEEE
    . DDDDDDDDDDDDDDDEEEEEEEEEEEEE
    . DDDDDDDDDDDDDDDDEEEEEEEEEEEEE
    . DDDDDDDDDDDDDDDDEEEEEEEEEEEEE
    + DDDDDDDDDDDDDDDEEEEEEEEEEEEE
    . DDDDDDDDDDDDDDDDEEEEEEEEEEEEE
    . DDDDDDDDDDDDDDDDEEEEEEEEEEEEE
    . DDDDDDDDDDDDDDDDEEEEEEEEEEEEE
    . DDDDDDDDDDDDDDDEEEEEEEEEEEEE
   40 DDDDDDDDDDDDDDDDEEEEEEEEEEEEE
    . DDDDDDDDDDDDDDDDEEEEEEEEEEEEE
    . DDDDDDDDDDDDDDDDEEEEEEEEEEEEE
    . DDDDDDDDDDDDDDDEEEEEEEEEEEEE
```

```
     . DDDDDDDDDDDDDDDDEEEEEEEEEEEE
     + DDDDDDDDDDDDDDDDEEEEEEEEEEEEE
     . DDDDDDDDDDDDDDDDEEEEEEEEEEEE
     . DDDDDDDDDDDDDDDDEEEEEEEEEEEE
     . DDDDDDDDDDDDDDDDEEEEEEEEEEEE
     . DDDDDDDDDDDDDDDDEEEEEEEEEEEEE
    30 DDDDDDDDDDDDDDDDEEEEEEEEEEEE
     . DDDDDDDDDDDDDDDDEEEEEEEEEEEE
     . DDDDDDDDDDDDDDDDEEEEEEEEEEEE
     . DDDDDDDDDDDDDDDDEEEEEEEEEEEEE
     . DDDDDDDDDDDDDDDDEEEEEEEEEEEEE
     + DDDDDDDDDDDDDDDDEEEEEEEEEEEE
     . DDDDDDDDDDEEEEEEEEEEEEEEEEEE
     . DDDDDDDDDEEEEEEEEEEEEEEEEEEEE
     . DDDDEEEEEEEEEEEEEEEEEEEEEEEEE
     . DDDEEEEEEEEEEEEEEEEEEEEEEEEE
    20 EEEEEEEEEEEEEEEEEEEEEE
     . EEEEEEEEEEEEEEEEEEEEE
     . EEEEEEEEEEEEEEEE
     . EEEEEEEEEEEEEEE
     . EEEEEEEEEEE
     + EEEEEEEEE
     . EEEE
     . EEE
     .
     .
    10
     .
     .
     .
     .
     +
     .
     .
     .
==>  ....+....1....+....2....+....3
```

```
            *****  REGION ASSIGNMENTS TO MESH INTERVALS  *****  - PAGE 1 -

           ((IREGN(I,J),I=1,MAXI),J=1,MAXJ)
                   REGION NUMBERS ASSIGNED TO MESH INTERVALS
                                     AXIAL POSITION : H(CM)=  21.50 -   22.70
 --- REMARKS ---
  :NO REGION
 1:KCORE1     2:KCORE2     3:KCOR3I     4:KCOR3O     5:KCORE4     6:KCORE5
 7:KTYPEB     8:KTYPEC     9:KCMTYB     A:KINSLT     B:KLSLD      C:KUSLD
 D:KRSLDC     E:KNTSLD     F:KCRADP     G:KCRABS     H:KINUSD     I:KLCRDP
  X-DIRECTION RANGE :  1 - 100
==>  ....+....1....+....2....+....3....+....4....+....5....+....6....+....7....+....8....+....9....+....0
  .                                                                EEEEE
  .                                                               EEEEEEE
  .                                                          EEEEEEEEEEEEEEEEE
  .                                                         EEEEEEEEEEEEEEEEEEE
 80                                                    EEEEEEEEEEEEEEEEEEEEEEEEEEEEE
  .                                                   EEEEEEEEEEEEEEEEEEEEEEEEEEEEEEE
  .                                              EEEEEEEEEEEEEEEEEEEEEEEEEEEEEEEEEEEEEEEEE
  .                                             EEEEEEEEEEEEEEEEEEEEEEEEEEEEEEEEEEEEEEEEEEE
  .                                        EEEEEEEEEEEEEEEEEEEEEEEEDDDDEEEEEEEEEEEEEEEEEEEEEEEEE
  +                                       EEEEEEEEEEEEEEEEEEEEEEEEDDDDDDEEEEEEEEEEEEEEEEEEEEEEEEE
  .                                  EEEEEEEEEEEEEEEEEEEEEEEEDDDDDDDDDDDDDDDDEEEEEEEEEEEEEEEEEEEEEEEEE
  .                                 EEEEEEEEEEEEEEEEEEEEEEEEDDDDDDDDDDDDDDDDDDEEEEEEEEEEEEEEEEEEEEEEEEE
  .                            EEEEEEEEEEEEEEEEEEEEEEEEDDDDDDDDDDDDDDDDDDDDDDDDDDDDDEEEEEEEEEEEEEEEEEEEEE
  .                           EEEEEEEEEEEEEEEEEEEEEEEEDDDDDDDDDDDDDDDDDDDDDDDDDDDDDDDEEEEEEEEEEEEEEEEEEEE
 70                      EEEEEEEEEEEEEEEEEEEEEEEEDDDDDDDDDDDDDDDDDDDDDDDDDDDDDDDDDDDDDDDDDEEEEEEEEEEEEEEE
  .                     EEEEEEEEEEEEEEEEEEEEEEEEDDDDDDDDDDDDDDDDDDDDDDDDDDDDDDDDDDDDDDDDDDDEEEEEEEEEEEEEE
  .                EEEEEEEEEEEEEEEEEEEEEEEEDDDDDDDDDDDDDDDDDDDDDDDDDDDDDDDDDDDDDDDDDDDDDDDDDDDDDEEEEEEEEE
  .               EEEEEEEEEEEEEEEEEEEEEEEEDDDDDDDDDDDDDDDDDDDDDDDDDDDDDDDDDDDDDDDDDDDDDDDDDDDDDDDEEEEEEEE
  .          EEEEEEEEEEEEEEEEEEEEEEEEDDDDDDDDDDDDDDDDDDDDDDDDDDDDDDDDDDDDDDDDDDDDDDDDDDDDDDDDDDDDDDDDDEEE
  +         EEEEEEEEEEEEEEEEEEEEEEEEDDDDDDDDDDDDDDDDDDDDDDDDDDDDDDDDDDDDDDDDDDDDDDDDDDDDDDDDDDDDDDDDDDDEE
  .    EEEEEEEEEEEEEEEEEEEEEEEEDDDDDDDDDDDDDDDDDDDDDDDDDDDDDDDDDDDDAAAAADDDDDDDDDDDDDDDDDDDDDDDDDDDDDDDDD
  .   EEEEEEEEEEEEEEEEEEEEEEEEDDDDDDDDDDDDDDDDDDDDDDDDDDDDDDDDDDDDAAAAAAADDDDDDDDDDDDDDDDDDDDDDDDDDDDDDDD
  .   EEEEEEEEEEEEEEEEEEEDDDDDDDDDDDDDDDDDDDDDDDDDDDDDDDDDDDDDDDDAAAAAAAAAAAAAAAAADDDDDDDDDDDDDDDDDDDDDDDDDDD
  .    EEEEEEEEEEEEEEEEEDDDDDDDDDDDDDDDDDDDDDDDDDDDDDDDDDDDDDDDDDDAAAAAAAAAAAAAAAAAAADDDDDDDDDDDDDDDDDDDDDDDDDD
 60    EEEEEEEEEEEEDDDDDDDDDDDDDDDDDDDDDDDDDDDDDDDDDDDDAAAAAAAAAAAAAAAAAAAAAAAAAAAAADDDDDDDDDDDDDDDDDDDDD
  .   EEEEEEEEEEEEDDDDDDDDDDDDDDDDDDDDDDDDDDDDDDDDDDDDAAAAAAAAAAAAAAAAAAAAAAAAAAAAAAADDDDDDDDDDDDDDDDDDDD
  .   EEEEEEEEEEEEDDDDDDDDDDDDDDDDDDDDDDDDDDDDDDDAAAAAAAAAAAAAAAAAAAAAAAAAAAAAAAAAAAAAAAAAAADDDDDDDDDDDDDDD
  .    EEEEEEEEEEEEDDDDDDDDDDDDDDDDDDDDDDDDDDDDDAAAAAAAAAAAAAAAAAAAAAAAAAAAAAAAAAAAAAAAAAAAAAAADDDDDDDDDDDDDD
  .    EEEEEEEEEEEEDDDDDDDDDDDDDDDDDDDDDDDDAAAAAAAAAAAAAAAAAAAAAAAAAAAAAAAAAAAAAAAAAAAAAAAAAAAAAAAAADDDDDDDDD
  +   EEEEEEEEEEEEDDDDDDDDDDDDDDDDDDDDDDDDAAAAAAAAAAAAAAAAAAAAAAAAAAAAAAAAAAAAAAAAAAAAAAAAAAAAAAAAAAADDDDDDDD
  .   EEEEEEEEEEEEDDDDDDDDDDDDDDDDDDDAAAAAAAAAAAAAAAAAAAAAAAAAAAAAAAAAAAAIIIIIAAAAAAAAAAAAAAAAAAADDDDDDDD
  .    EEEEEEEEEEEEDDDDDDDDDDDDDDDDAAAAAAAAAAAAAAAAAAAAAAAAAAAAAAAAAAAAAIIIIIIIAAAAAAAAAAAAAAAAADDDDDDDDD
  .    EEEEEEEEEEEEDDDDDDDDDDDDDDDDAAAAAAAAAAAAAAAAAAAAAAAAAAAAAAAAAAAAAIIIIIIIAAAAAAAAAAAAAAAAADDDDDDDDD
  .   EEEEEEEEEEEEDDDDDDDDDDDDDDDDDDDAAAAAAAAAAAAAAAAAAAAAAAAAAAAAAAAAAAAIIIIIAAAAAAAAAAAAAAAAAAADDDDDDDD
 50   EEEEEEEEEEEEDDDDDDDDDDDDDDDDDDDIIIIIAAAAAAAAAAAAAAAAAAAAAAAAAAAAAAAAAAAAAAAAAAAAAAAAAAAAAAAAAAAAAAAADDD
  .    EEEEEEEEEEEEDDDDDDDDDDDDDDDDDIIIIIIIAAAAAAAAAAAAAAAAAAAAAAAAAAAAAAAAAAAAAAAAAAAAAAAAAAAAAAAAAAAAAAAADD
  .    EEEEEEEEEEEEDDDDDDDDDDDDDDDDDIIIIIIIAAAAAAAAAAAAAAAAAAAAAAAAAAAAAAAAAAAAAAAAAAAAAAAAAAAAAAAAAAAAAAAADD
  .   EEEEEEEEEEEEDDDDDDDDDDDDDDDDDDDIIIIIAAAAAAAAAAAAAAAAAAAAAAAAAAAAAAAAAAAAAAAAAAAAAAAAAAAAAAAAAAAAAAAADDD
  .   EEEEEEEEEEEEDDDDDDDDDDDDDDDDDDDAAAAAAAAAAAAAAAAAAAAAAAAAAAAAAAAAAAAAAAAAAAAAAAAAIIIIIAAAAAAAAAAAADDD
  +    EEEEEEEEEEEEDDDDDDDDDDDDDDDDAAAAAAAAAAAAAAAAAAAAAAAAAAAAAAAAAAAAAAAAAAAAAAAAAAAAAIIIIIIIAAAAAAAAAAAADD
  .    EEEEEEEEEEEEDDDDDDDDDDDDDDDDAAAAAAAAAAAAAAAAAAAAAAAAAAAAAAAAAAAAAAAAAAAAAAAAAAAAAIIIIIIIAAAAAAAAAAAADD
  .   EEEEEEEEEEEEDDDDDDDDDDDDDDDDDDDAAAAAAAAAAAAAAAAAAAAAAAAAAAAAAAAAAAAAAAAAAAAAAAAAIIIIIAAAAAAAAAAAADDD
  .   EEEEEEEEEEEEDDDDDDDDDDDDDDDDDDDAAAAAAAAAAAAIIIIIAAAAAAAAAAAAAAAAAAAAAAAAAAAAAAAAAAAAAAAAAAAAAAAAADDD
  .    EEEEEEEEEEEEDDDDDDDDDDDDDDDDAAAAAAAAAAAAAIIIIIIIAAAAAAAAAAAAAAAAAAAAAAAAAAAAAAAAAAAAAAAAAAAAAAAAADD
 40    EEEEEEEEEEEEDDDDDDDDDDDDDDDDAAAAAAAAAAAAAIIIIIIIAAAAAAAAAAAAAAAAAAAAAAAAAAAAAAAAAAAAAAAAAAAAAAAAADD
  .   EEEEEEEEEEEEDDDDDDDDDDDDDDDDDDDAAAAAAAAAAAAIIIIIAAAAAAAAAAAAAAAAAAAAAAAAAAAAAAAAAAAAAAAAAAAAAAAAADDD
  .   EEEEEEEEEEEEDDDDDDDDDDDDDDDDDDDAAAAAAAAAAAAAAAAAAAAAAAAAAAAAAAAAAAAAAAAAAAAAAAAAAAAAAAAAIIIIIDDD
  .    EEEEEEEEEEEEDDDDDDDDDDDDDDDDAAAAAAAAAAAAAAAAAAAAAAAAAAAAAAAAAAAAAAAAAAAAAAAAAAAAAAAAAAAAAIIIIIIIDD
```

```
 .   EEEEEEEEEEEEDDDDDDDDDDDDDDDDDDDAAAAAAAAAAAAAAAAAAAAAAAAAAAAAAAAAAAAAAAAAAAAAAAAAAAAAAAAAAAAAAAAAAAAAAAAAAAIIIIIIIDD
 +  EEEEEEEEEEEEDDDDDDDDDDDDDDDDDDDAAAAAAAAAAAAAAAAAAAAAAAAAAAAAAAAAAAAAAAAAAAAAAAAAAAAAAAAAAAAAAAAAAAAAAAAAAAAIIIIIIDDD
 .  EEEEEEEEEEEEDDDDDDDDDDDDDDDDDDDDDDDDDDDAAAAAAAAAAAAAAAAAAAAAIIIIIAAAAAAAAAAAAAAAAAAAAAAAAAAAAAAAAAAAAAAAAAAAAAAADDD
 .   EEEEEEEEEEEEDDDDDDDDDDDDDDDDDDDDDDDDDDDAAAAAAAAAAAAAAAAAAAIIIIIIIAAAAAAAAAAAAAAAAAAAAAAAAAAAAAAAAAAAAAAAAAAAAAAADD
 .   EEEEEEEEEEEEDDDDDDDDDDDDDDDDDDDDDDDDDDDAAAAAAAAAAAAAAAAAAAIIIIIIIAAAAAAAAAAAAAAAAAAAAAAAAAAAAAAAAAAAAAAAAAAAAAAADD
 .  EEEEEEEEEEEEDDDDDDDDDDDDDDDDDDDDDDDDDDDAAAAAAAAAAAAAAAAAAAIIIIIAAAAAAAAAAAAAAAAAAAAAAAAAAAAAAAAAAAAAAAAAAAAAAADDD
30  EEEEEEEEEEEEDDDDDDDDDDDDDDDDDDDDDDDDDDDAAAAAAAAAAAAAAAAAAAAAAAAAAAAAAAAAAAAAAAAAAAAAAAAAAAAAAAAAAAAAAAAAAAADDDDDDDD
 .   EEEEEEEEEEEEDDDDDDDDDDDDDDDDDDDDDDDDDDDAAAAAAAAAAAAAAAAAAAAAAAAAAAAAAAAAAAAAAAAAAAAAAAAAAAAAAAAAAAAAAAAAAAADDDDDDDDD
 .   EEEEEEEEEEEEDDDDDDDDDDDDDDDDDDDDDDDDDDDAAAAAAAAAAAAAAAAAAAAAAAAAAAAAAAAAAAAAAAAAAAAAAAAAAAAAAADDDDDDDDDDDDDDDDDDDD
 .  EEEEEEEEEEEEDDDDDDDDDDDDDDDDDDDDDDDDDDDDDDDDDDDAAAAAAAAAAAAAAAAAAAAAAAAAAAAAAAAAAAAAAAAAAAAAADDDDDDDDDDDDDDDDDDDDDD
 .  EEEEEEEEEEEEDDDDDDDDDDDDDDDDDDDDDDDDDDDDDDDDDDDDDDDAAAAAAAAAAAAAAAAAAAAAAAAAAAAAAAAAAAAAADDDDDDDDDDDDDDDDDDDDDDDDDD
 +   EEEEEEEEEEEEDDDDDDDDDDDDDDDDDDDDDDDDDDDDDDDDDDDDDDDDAAAAAAAAAAAAAAAAAAAAAAAAAAAAAAAAADDDDDDDDDDDDDDDDDDDDDDDDDDDDD
 .   EEEEEEEEEEEEEEEEEEEEDDDDDDDDDDDDDDDDDDDDDDDDDDDDDDDDDDDDDDDDAAAAAAAAAAAAAAAAAAAAAADDDDDDDDDDDDDDDDDDDDDDDDDDDDDDDDD
 .  EEEEEEEEEEEEEEEEEEEEEEEEDDDDDDDDDDDDDDDDDDDDDDDDDDDDDDDDDDDDDDDDAAAAAAAAAAAAAAAAAADDDDDDDDDDDDDDDDDDDDDDDDDDDDDDDDDD
 .  EEEEEEEEEEEEEEEEEEEEEEEEEEDDDDDDDDDDDDDDDDDDDDDDDDDDDDDDDDDDDDDDDDDDDDDDDDDDDDDDDDDDDDDDDDDDDDDDDDDDDDDDDDDDDDDDDDDD
 .   EEEEEEEEEEEEEEEEEEEEEEEEEEEEDDDDDDDDDDDDDDDDDDDDDDDDDDDDDDDDDDDDDDDDDDDDDDDDDDDDDDDDDDDDDDDDDDDDDDDDDDDDDDDDDDDDDDDDD
20        EEEEEEEEEEEEEEEEEEEEEEEEEEEEDDDDDDDDDDDDDDDDDDDDDDDDDDDDDDDDDDDDDDDDDDDDDDDDDDDDDDDDDDDDDDDDDDDDDDDDDDDDDDDDDDDDDEE
 .         EEEEEEEEEEEEEEEEEEEEEEEEEEEEDDDDDDDDDDDDDDDDDDDDDDDDDDDDDDDDDDDDDDDDDDDDDDDDDDDDDDDDDDDDDDDDDDDDDDDDDDDDDDDDDDDEEE
 .              EEEEEEEEEEEEEEEEEEEEEEEEEEDDDDDDDDDDDDDDDDDDDDDDDDDDDDDDDDDDDDDDDDDDDDDDDDDDDDDDDDDDDDDDDDDDDDDDDDDDDDDDDDEEEEEEEE
 .               EEEEEEEEEEEEEEEEEEEEEEEEEEDDDDDDDDDDDDDDDDDDDDDDDDDDDDDDDDDDDDDDDDDDDDDDDDDDDDDDDDDDDDDDDDDDDDDDDDDDDDDDDEEEEEEEEE
 .                    EEEEEEEEEEEEEEEEEEEEEEEEEEDDDDDDDDDDDDDDDDDDDDDDDDDDDDDDDDDDDDDDDDDDDDDDDDDDDDDDDDDDDDDDDDDDDDDDDDEEEEEEEEEEEEEEE
 +                     EEEEEEEEEEEEEEEEEEEEEEEEEEDDDDDDDDDDDDDDDDDDDDDDDDDDDDDDDDDDDDDDDDDDDDDDDDDDDDDDDDDDDDDDDDDDDDEEEEEEEEEEEEEEEEEE
 .                           EEEEEEEEEEEEEEEEEEEEEEEEEEDDDDDDDDDDDDDDDDDDDDDDDDDDDDDDDDDDDDDDDDDDDDDDDDDDDDDDDDDDDDDDDEEEEEEEEEEEEEEEEEEEEE
 .                            EEEEEEEEEEEEEEEEEEEEEEEEEEDDDDDDDDDDDDDDDDDDD
```

```
            *****  REGION ASSIGNMENTS TO MESH INTERVALS  *****  - PAGE 2 -

           ((IREGN(I,J),I=1,MAXI),J=1,MAXJ)
                   REGION NUMBERS ASSIGNED TO MESH INTERVALS
                                          AXIAL POSITION : H(CM)=  21.50 -   22.70
--- REMARKS ---
 :NO REGION
1:KCORE1     2:KCORE2     3:KCOR3I     4:KCOR3O     5:KCORE4     6:KCORE5
7:KTYPEB     8:KTYPEC     9:KCMTYB     A:KINSLT     B:KLSLD      C:KUSLD
D:KRSLDC     E:KNTSLD     F:KCRADP     G:KCRABS     H:KINUSD     I:KLCRDP
 X-DIRECTION RANGE :101 - 129
 ==>  ....+....1....+....2....+....3
    .
    .
    .
    .
   80
    .
    .
    .
    .
    +
    .
    .
    . EEE
    . EEEE
   70 EEEEEEEEE
    . EEEEEEEEEE
    . EEEEEEEEEEEEEEE
    . EEEEEEEEEEEEEEEE
    . EEEEEEEEEEEEEEEEEEEE
    + EEEEEEEEEEEEEEEEEEEEEE
    . DDDEEEEEEEEEEEEEEEEEEEEEEEE
    . DDDDEEEEEEEEEEEEEEEEEEEEEEEEE
    . DDDDDDDDDEEEEEEEEEEEEEEEEEEE
    . DDDDDDDDDDEEEEEEEEEEEEEEEEEE
   60 DDDDDDDDDDDDDDDEEEEEEEEEEEE
    . DDDDDDDDDDDDDDDDEEEEEEEEEEEE
    . DDDDDDDDDDDDDDDDEEEEEEEEEEE
    . DDDDDDDDDDDDDDDDEEEEEEEEEEE
    . DDDDDDDDDDDDDDDDEEEEEEEEEEE
    + DDDDDDDDDDDDDDDDEEEEEEEEEEEE
    . DDDDDDDDDDDDDDDDEEEEEEEEEEEE
    . DDDDDDDDDDDDDDDDEEEEEEEEEEE
    . DDDDDDDDDDDDDDDDEEEEEEEEEEE
    . DDDDDDDDDDDDDDDDEEEEEEEEEEEE
   50 DDDDDDDDDDDDDDDDEEEEEEEEEEEE
    . DDDDDDDDDDDDDDDDEEEEEEEEEEE
    . DDDDDDDDDDDDDDDDEEEEEEEEEEE
    . DDDDDDDDDDDDDDDDEEEEEEEEEEEE
    . DDDDDDDDDDDDDDDDEEEEEEEEEEEE
    + DDDDDDDDDDDDDDDEEEEEEEEEEEE
    . DDDDDDDDDDDDDDDDEEEEEEEEEEE
    . DDDDDDDDDDDDDDDDEEEEEEEEEEEE
    . DDDDDDDDDDDDDDDDEEEEEEEEEEEE
    . DDDDDDDDDDDDDDDEEEEEEEEEEEE
   40 DDDDDDDDDDDDDDDDEEEEEEEEEEE
    . DDDDDDDDDDDDDDDDEEEEEEEEEEEE
    . DDDDDDDDDDDDDDDDEEEEEEEEEEEE
    . DDDDDDDDDDDDDDDDEEEEEEEEEEE
```

```
 . DDDDDDDDDDDDDDDDEEEEEEEEEEEE
 + DDDDDDDDDDDDDDDDEEEEEEEEEEEEE
 . DDDDDDDDDDDDDDDDEEEEEEEEEEEEE
 . DDDDDDDDDDDDDDDDEEEEEEEEEEEE
 . DDDDDDDDDDDDDDDDEEEEEEEEEEEE
 . DDDDDDDDDDDDDDDDEEEEEEEEEEEEE
30 DDDDDDDDDDDDDDDDEEEEEEEEEEEE
 . DDDDDDDDDDDDDDDDEEEEEEEEEEEE
 . DDDDDDDDDDDDDDDDEEEEEEEEEEEE
 . DDDDDDDDDDDDDDDDEEEEEEEEEEEEE
 . DDDDDDDDDDDDDDDDEEEEEEEEEEEEE
 + DDDDDDDDDDDDDDDDEEEEEEEEEEEE
 . DDDDDDDDDDEEEEEEEEEEEEEEEEEE
 . DDDDDDDDDEEEEEEEEEEEEEEEEEEEE
 . DDDDEEEEEEEEEEEEEEEEEEEEEEEEE
 . DDDEEEEEEEEEEEEEEEEEEEEEEEEE
20 EEEEEEEEEEEEEEEEEEEEEE
 . EEEEEEEEEEEEEEEEEEEEE
 . EEEEEEEEEEEEEEEE
 . EEEEEEEEEEEEEEE
 . EEEEEEEEEEE
 + EEEEEEEEE
 . EEEE
 . EEE
 .
 .
10
 .
 .
 .
 .
 +
 .
 .
 .
 .
==>  ....+....1....+....2....+....3
```

```
         *****  REGION ASSIGNMENTS TO MESH INTERVALS  *****  - PAGE 1 -

        ((IREGN(I,J),I=1,MAXI),J=1,MAXJ)
                REGION NUMBERS ASSIGNED TO MESH INTERVALS
                                    AXIAL POSITION : H(CM)=  22.70 -   73.36
--- REMARKS ---
 :NO REGION
1:KCORE1      2:KCORE2      3:KCOR3I      4:KCOR3O      5:KCORE4      6:KCORE5
7:KTYPEB      8:KTYPEC      9:KCMTYB      A:KINSLT      B:KLSLD       C:KUSLD
D:KRSLDC      E:KNTSLD      F:KCRADP      G:KCRABS      H:KINUSD      I:KLCRDP
 X-DIRECTION RANGE :  1 - 100
 ==>  ....+....1....+....2....+....3....+....4....+....5....+....6....+....7....+....8....+....9....+....0
    .                                                               EEEEE
    .                                                              EEEEEEE
    .                                                         EEEEEEEEEEEEEEEEE
    .                                                        EEEEEEEEEEEEEEEEEEE
   80                                                   EEEEEEEEEEEEEEEEEEEEEEEEEEEEE
    .                                                  EEEEEEEEEEEEEEEEEEEEEEEEEEEEEEE
    .                                             EEEEEEEEEEEEEEEEEEEEEEEEEEEEEEEEEEEEEEEEE
    .                                            EEEEEEEEEEEEEEEEEEEEEEEEEEEEEEEEEEEEEEEEEEE
    .                                       EEEEEEEEEEEEEEEEEEEEEEEEEDDDDEEEEEEEEEEEEEEEEEEEEEEEE
    +                                      EEEEEEEEEEEEEEEEEEEEEEEEEDDDDDDEEEEEEEEEEEEEEEEEEEEEEEE
    .                                 EEEEEEEEEEEEEEEEEEEEEEEEEDDDDDDDDDDDDDDDDEEEEEEEEEEEEEEEEEEEEEEEE
    .                                EEEEEEEEEEEEEEEEEEEEEEEEEDDDDDDDDDDDDDDDDDDEEEEEEEEEEEEEEEEEEEEEEEE
    .                           EEEEEEEEEEEEEEEEEEEEEEEEEDDDDDDDDDDDDDDDDDDDDDDDDDDDDEEEEEEEEEEEEEEEEEEEEE
    .                          EEEEEEEEEEEEEEEEEEEEEEEEEDDDDDDDDDDDDDDDDDDDDDDDDDDDDDDEEEEEEEEEEEEEEEEEEEE
   70                     EEEEEEEEEEEEEEEEEEEEEEEEEDDDDDDDDDDDDDDDDDDDDDDDDDDDDDDDDDDDDDDDDEEEEEEEEEEEEEEE
    .                    EEEEEEEEEEEEEEEEEEEEEEEEEDDDDDDDDDDDDDDDDDDDDDDDDDDDDDDDDDDDDDDDDDEEEEEEEEEEEEEE
    .               EEEEEEEEEEEEEEEEEEEEEEEEEDDDDDDDDDDDDDDDDDDDDDDDDDDDDDDDDDDDDDDDDDDDDDDDDDDDDEEEEEEEEE
    .              EEEEEEEEEEEEEEEEEEEEEEEEEDDDDDDDDDDDDDDDDDDDDDDDDDDDDDDDDDDDDDDDDDDDDDDDDDDDDDEEEEEEEE
    .         EEEEEEEEEEEEEEEEEEEEEEEEEDDDDDDDDDDDDDDDDDDDDDDDDDDDDDDDDDDDDDDDDDDDDDDDDDDDDDDDDDDDDDDDEEE
    +        EEEEEEEEEEEEEEEEEEEEEEEEEDDDDDDDDDDDDDDDDDDDDDDDDDDDDDDDDDDDDDDDDDDDDDDDDDDDDDDDDDDDDDDDDDDEE
    .   EEEEEEEEEEEEEEEEEEEEEEEEEDDDDDDDDDDDDDDDDDDDDDDDDDDDDDDDDDDD66666DDDDDDDDDDDDDDDDDDDDDDDDDDDDDDDDD
    .  EEEEEEEEEEEEEEEEEEEEEEEEEDDDDDDDDDDDDDDDDDDDDDDDDDDDDDDDDDDD6666666DDDDDDDDDDDDDDDDDDDDDDDDDDDDDDDD
    .  EEEEEEEEEEEEEEEEEEEEDDDDDDDDDDDDDDDDDDDDDDDDDDDDDDDDDDD66666666666666666DDDDDDDDDDDDDDDDDDDDDDDDDDD
    .   EEEEEEEEEEEEEEEEEEDDDDDDDDDDDDDDDDDDDDDDDDDDDDDDDDDDD6666666666666666666DDDDDDDDDDDDDDDDDDDDDDDDDD
   60   EEEEEEEEEEEEDDDDDDDDDDDDDDDDDDDDDDDDDDDDDDDDDDDDD666666666666555556666666666666DDDDDDDDDDDDDDDDDDDD
    .  EEEEEEEEEEEEEDDDDDDDDDDDDDDDDDDDDDDDDDDDDDDDDDDDD666666666666555555666666666666DDDDDDDDDDDDDDDDDDDD
    .  EEEEEEEEEEEEEDDDDDDDDDDDDDDDDDDDDDDDDDDDDDDD66666666666655555555555555555666666666666DDDDDDDDDDDDDD
    .   EEEEEEEEEEEEDDDDDDDDDDDDDDDDDDDDDDDDDDDDDD6666666666666555555555555555555666666666666DDDDDDDDDDDDD
    .   EEEEEEEEEEEEDDDDDDDDDDDDDDDDDDDDDDDDD66666666666655555555555444445555555555556666666666666DDDDDDDD
    +  EEEEEEEEEEEEEDDDDDDDDDDDDDDDDDDDDDDDD6666666666666555555555544444445555555555556666666666666DDDDDDDD
    .  EEEEEEEEEEEEEDDDDDDDDDDDDDDDDDDD66666666666655555555555533333444444FFFF55555555555556666666666DDDDDD
    .   EEEEEEEEEEEEDDDDDDDDDDDDDDDDDDD666666666666555555555555333333444444FFFFFF555555555555566666DDDDDDDD
    .   EEEEEEEEEEEEDDDDDDDDDDDDDDDDDDD6666665555555555557777733333332222FFFFFF4444555555555555555DDDDDDDD
    .  EEEEEEEEEEEEEDDDDDDDDDDDDDDDDDDD666665555555555557777777333332222222FFFF4444444555555555555DDDDDDDD
   50  EEEEEEEEEEEEEDDDDDDDDDDDDDDDDDDDFFFFF555555544444777777722222222222222224444444444444555555666666DDD
    .   EEEEEEEEEEEEDDDDDDDDDDDDDDDDDDDFFFFFF5555444444477777222222222222222224444444444444455555666666666DD
    .   EEEEEEEEEEEEDDDDDDDDDDDDDDDDDDDFFFFFF55554444444222222222222111112222222222224444444455555666666DD
    .  EEEEEEEEEEEEEDDDDDDDDDDDDDDDDDDDFFFFF5555555444442222222222222111111222222222222444445555556666666DDD
    .  EEEEEEEEEEEEEDDDDDDDDDDDDDDDDDDD666665555555333332222222888881111118888822222222FFFF555555556666666DDD
    +   EEEEEEEEEEEEDDDDDDDDDDDDDDDDDDD6666665555533333333222288888881111888888882222FFFFFF555556666666DD
    .   EEEEEEEEEEEEDDDDDDDDDDDDDDDDDDD66666655555333333332222888888877777888888822222FFFFFF555556666666DD
    .  EEEEEEEEEEEEEDDDDDDDDDDDDDDDDDDD666665555555333332222222888887777777888882222222FFFF555555566666DDD
    .  EEEEEEEEEEEEEDDDDDDDDDDDDDDDDDDD6666655555555FFFFF222222211117777777111122222222333335555555666666DDD
    .   EEEEEEEEEEEEDDDDDDDDDDDDDDDDDDD66666655555FFFFFF222221111117777711111122222333333355555566666666DD
   40   EEEEEEEEEEEEDDDDDDDDDDDDDDDDDDD66666655555FFFFFF222221111118888811111122222333333355555566666666DD
    .  EEEEEEEEEEEEEDDDDDDDDDDDDDDDDDDD6666655555555FFFFF222222211118888888111122222222333335555555666666DDD
    .  EEEEEEEEEEEEEDDDDDDDDDDDDDDDDDDD666665555555444442222222222288888882222222222224444455555556666FFFFFDDD
    .   EEEEEEEEEEEEDDDDDDDDDDDDDDDDDDD66666655554444444222222222222888882222222222222444444555555FFFFFFFDD
```

```
 .   EEEEEEEEEEEEDDDDDDDDDDDDDDDDDD66666665555544444444444422222222222222222299999444444555555FFFFFFFDD
 +  EEEEEEEEEEEEDDDDDDDDDDDDDDDDDDD666665555555444444444444222222222222222222999999944444555555555FFFFFDDD
 .  EEEEEEEEEEEEDDDDDDDDDDDDDDDDDDDDDDDD55555555555544444444FFFFF2222222333333999999955555555555566666DDD
 .   EEEEEEEEEEEEDDDDDDDDDDDDDDDDDDDDDDDD555555555555544444444FFFFFFF2222223333333999999555555555555666666666DD
 .   EEEEEEEEEEEEDDDDDDDDDDDDDDDDDDDDDDDDDDDD66666555555555555555FFFFFFF4444433333335555555555555666666666666DD
 .  EEEEEEEEEEEEDDDDDDDDDDDDDDDDDDDDDDDDDDDD666666555555555555555FFFFF44444443333335555555555555666666666666DDD
30  EEEEEEEEEEEEDDDDDDDDDDDDDDDDDDDDDDDDDDDD66666666666665555555555554444444555555555555566666666666DDDDDDDD
 .   EEEEEEEEEEEEDDDDDDDDDDDDDDDDDDDDDDDDDDDD66666666666665555555555554444445555555555555666666666666DDDDDDDDD
 .   EEEEEEEEEEEEDDDDDDDDDDDDDDDDDDDDDDDDDDDDDDDD66666666666655555555555555555555666666666666DDDDDDDDDDDDDD
 .  EEEEEEEEEEEEDDDDDDDDDDDDDDDDDDDDDDDDDDDDDDDDDD6666666666665555555555555555555666666666666DDDDDDDDDDDDDDDD
 .  EEEEEEEEEEEEDDDDDDDDDDDDDDDDDDDDDDDDDDDDDDDDDDDD66666666666655555555666666666666DDDDDDDDDDDDDDDDDDDDDD
 +   EEEEEEEEEEEEDDDDDDDDDDDDDDDDDDDDDDDDDDDDDDDDDDDDD66666666666655555566666666666666DDDDDDDDDDDDDDDDDDDDDD
 .   EEEEEEEEEEEEEEEEEEEEDDDDDDDDDDDDDDDDDDDDDDDDDDDDDDDDDDDDDDDDDDDD66666666666666666666DDDDDDDDDDDDDDDDDDDDDD
 .  EEEEEEEEEEEEEEEEEEEEDDDDDDDDDDDDDDDDDDDDDDDDDDDDDDDDDDDDDDDDDDDDDD6666666DDDDDDDDDDDDDDDDDDDDDDDDDDDDDDDD
 .  EEEEEEEEEEEEEEEEEEEEEEEEDDDDDDDDDDDDDDDDDDDDDDDDDDDDDDDDDDDDDDDDDDDDDDD66666DDDDDDDDDDDDDDDDDDDDDDDDDDDDDDDD
 .   EEEEEEEEEEEEEEEEEEEEEEEEDDDDDDDDDDDDDDDDDDDDDDDDDDDDDDDDDDDDDDDDDDDDDDDDDDDDDDDDDDDDDDDDDDDDDDDDDDDDDDDDD
20        EEEEEEEEEEEEEEEEEEEEEEEEEEEEDDDDDDDDDDDDDDDDDDDDDDDDDDDDDDDDDDDDDDDDDDDDDDDDDDDDDDDDDDDDDDDDDDDDDDDDDEE
 .         EEEEEEEEEEEEEEEEEEEEEEEEEEEEDDDDDDDDDDDDDDDDDDDDDDDDDDDDDDDDDDDDDDDDDDDDDDDDDDDDDDDDDDDDDDDDDDDDDDDDDEEE
 .              EEEEEEEEEEEEEEEEEEEEEEEEEEEEDDDDDDDDDDDDDDDDDDDDDDDDDDDDDDDDDDDDDDDDDDDDDDDDDDDDDDDDDDDDDDDDDDDDDDDEEEEEEEE
 .               EEEEEEEEEEEEEEEEEEEEEEEEEEEEDDDDDDDDDDDDDDDDDDDDDDDDDDDDDDDDDDDDDDDDDDDDDDDDDDDDDDDDDDDDDDDDDDDDDDDEEEEEEEEE
 .                    EEEEEEEEEEEEEEEEEEEEEEEEEEEEDDDDDDDDDDDDDDDDDDDDDDDDDDDDDDDDDDDDDDDDDDDDDDDDDDDDDDDDDDDDDDDDDDDDDDEEEEEEEEEE
 +                     EEEEEEEEEEEEEEEEEEEEEEEEEEEEDDDDDDDDDDDDDDDDDDDDDDDDDDDDDDDDDDDDDDDDDDDDDDDDDDDDDDDDDDDDDDDDDDDDEEEEEEEEEEEEEE
 .                          EEEEEEEEEEEEEEEEEEEEEEEEEEEEDDDDDDDDDDDDDDDDDDDDDDDDDDDDDDDDDDDDDDDDDDDDDDDDDDDDDDDDDDDDDDDDDDDEEEEEEEEEEEEEEEE
 .                           EEEEEEEEEEEEEEEEEEEEEEEEEEEEDDDDDDDDDDDDDDDDDDDDDDDDDDDDDDDDDDDDDDDDDDDDDDDDDDDDDDDDDDDDDDDDDDEEEEEEEEEEEEEEEEEE
 .                                EEEEEEEEEEEEEEEEEEEEEEEEEEEEDDDDDDDDDDDDDDDDDDDDDDDDDDDDDDDDDDDDDDDDDDDDDDDDDDDDDDDDDDDDDEEEEEEEEEEEEEEEEEEEEE
 .                                 EEEEEEEEEEEEEEEEEEEEEEEEEEEEDDDDDDDDDDDDDDDDDDDDDDDDDDDDDDDDDDDDDDDDDDDDDDDDDDDDDDDDDDDDDEEEEEEEEEEEEEEEEEEEEEEE
10                                      EEEEEEEEEEEEEEEEEEEEEEEEEEEEDDDDDDDDDDDDDDDDDDDDDDDDDDDDDDDDDDDDDDDDDDDDDDDDDDDDDDDDDDDDDEEEEEEEEEEEEEEEEEEEEEEEEE
 .                                       EEEEEEEEEEEEEEEEEEEEEEEEEEEEDDDDDDDDDDDDDDDDDDDDDDDDDDDDDDDDDDDDDDDDDDDDDDDDDDDDDDDDDDDDDDDDDDEEEEEEEEEEEEEEEEEEE
```

```
*****  REGION ASSIGNMENTS TO MESH INTERVALS  *****  - PAGE 2 -

((IREGN(I,J),I=1,MAXI),J=1,MAXJ)
        REGION NUMBERS ASSIGNED TO MESH INTERVALS
                                AXIAL POSITION : H(CM)=  22.70 -   73.36
--- REMARKS ---
 :NO REGION
1:KCORE1     2:KCORE2     3:KCOR3I     4:KCOR3O     5:KCORE4     6:KCORE5
7:KTYPEB     8:KTYPEC     9:KCMTYB     A:KINSLT     B:KLSLD      C:KUSLD
D:KRSLDC     E:KNTSLD     F:KCRADP     G:KCRABS     H:KINUSD     I:KLCRDP
 X-DIRECTION RANGE :101 - 129
 ==>  ....+....1....+....2....+....3
    .
    .
    .
    .
   80
    .
    .
    .
    .
    +
    .
    .
    . EEE
    . EEEE
   70 EEEEEEEEE
    . EEEEEEEEEE
    . EEEEEEEEEEEEEEE
    . EEEEEEEEEEEEEEEE
    . EEEEEEEEEEEEEEEEEEEEE
    + EEEEEEEEEEEEEEEEEEEEEEE
    . DDDEEEEEEEEEEEEEEEEEEEEEEEE
    . DDDDEEEEEEEEEEEEEEEEEEEEEEEE
    . DDDDDDDDDEEEEEEEEEEEEEEEEEEE
    . DDDDDDDDDDEEEEEEEEEEEEEEEEE
   60 DDDDDDDDDDDDDDDEEEEEEEEEEEE
    . DDDDDDDDDDDDDDDDEEEEEEEEEEEE
    . DDDDDDDDDDDDDDDDEEEEEEEEEEEE
    . DDDDDDDDDDDDDDDEEEEEEEEEEEE
    . DDDDDDDDDDDDDDDEEEEEEEEEEEE
    + DDDDDDDDDDDDDDDDEEEEEEEEEEEE
    . DDDDDDDDDDDDDDDDEEEEEEEEEEEE
    . DDDDDDDDDDDDDDDEEEEEEEEEEE
    . DDDDDDDDDDDDDDDEEEEEEEEEEE
    . DDDDDDDDDDDDDDDDEEEEEEEEEEE
   50 DDDDDDDDDDDDDDDDEEEEEEEEEEE
    . DDDDDDDDDDDDDDDDEEEEEEEEEEE
    . DDDDDDDDDDDDDDDEEEEEEEEEEE
    . DDDDDDDDDDDDDDDDEEEEEEEEEEE
    . DDDDDDDDDDDDDDDDEEEEEEEEEEE
    + DDDDDDDDDDDDDDDDEEEEEEEEEEE
    . DDDDDDDDDDDDDDDEEEEEEEEEEE
    . DDDDDDDDDDDDDDDDEEEEEEEEEEE
    . DDDDDDDDDDDDDDDDEEEEEEEEEEE
    . DDDDDDDDDDDDDDDEEEEEEEEEEE
   40 DDDDDDDDDDDDDDDEEEEEEEEEEE
    . DDDDDDDDDDDDDDDDEEEEEEEEEEE
    . DDDDDDDDDDDDDDDDEEEEEEEEEEE
    . DDDDDDDDDDDDDDDEEEEEEEEEEE
```

```
     . DDDDDDDDDDDDDDDDEEEEEEEEEEEE
     + DDDDDDDDDDDDDDDDEEEEEEEEEEEEE
     . DDDDDDDDDDDDDDDDEEEEEEEEEEEEE
     . DDDDDDDDDDDDDDDDEEEEEEEEEEEE
     . DDDDDDDDDDDDDDDDEEEEEEEEEEEE
     . DDDDDDDDDDDDDDDDEEEEEEEEEEEEE
    30 DDDDDDDDDDDDDDDDEEEEEEEEEEEEE
     . DDDDDDDDDDDDDDDDEEEEEEEEEEEE
     . DDDDDDDDDDDDDDDDEEEEEEEEEEEE
     . DDDDDDDDDDDDDDDDEEEEEEEEEEEEE
     . DDDDDDDDDDDDDDDDEEEEEEEEEEEEE
     + DDDDDDDDDDDDDDDDEEEEEEEEEEEE
     . DDDDDDDDDDEEEEEEEEEEEEEEEEEE
     . DDDDDDDDDEEEEEEEEEEEEEEEEEEE
     . DDDDEEEEEEEEEEEEEEEEEEEEEEEE
     . DDDEEEEEEEEEEEEEEEEEEEEEEEE
    20 EEEEEEEEEEEEEEEEEEEEEEE
     . EEEEEEEEEEEEEEEEEEEEE
     . EEEEEEEEEEEEEEEE
     . EEEEEEEEEEEEEEE
     . EEEEEEEEEE
     + EEEEEEEEE
     . EEEE
     . EEE
     .
     .
    10
     .
     .
     .
     .
     +
     .
     .
     .
     .
==>  ....+....1....+....2....+....3
```

```
          *****  REGION ASSIGNMENTS TO MESH INTERVALS  *****  - PAGE 1 -

         ((IREGN(I,J),I=1,MAXI),J=1,MAXJ)
                 REGION NUMBERS ASSIGNED TO MESH INTERVALS
                                     AXIAL POSITION : H(CM)=  73.36 -   74.57
--- REMARKS ---
 :NO REGION
1:KCORE1      2:KCORE2      3:KCOR3I      4:KCOR3O      5:KCORE4      6:KCORE5
7:KTYPEB      8:KTYPEC      9:KCMTYB      A:KINSLT      B:KLSLD       C:KUSLD
D:KRSLDC      E:KNTSLD      F:KCRADP      G:KCRABS      H:KINUSD      I:KLCRDP
 X-DIRECTION RANGE :  1 - 100
==>   ....+....1....+....2....+....3....+....4....+....5....+....6....+....7....+....8....+....9....+....0
  .                                                                 EEEEE
  .                                                                EEEEEEE
  .                                                           EEEEEEEEEEEEEEEEE
  .                                                          EEEEEEEEEEEEEEEEEEE
 80                                                     EEEEEEEEEEEEEEEEEEEEEEEEEEEEE
  .                                                    EEEEEEEEEEEEEEEEEEEEEEEEEEEEEEE
  .                                               EEEEEEEEEEEEEEEEEEEEEEEEEEEEEEEEEEEEEEEEE
  .                                              EEEEEEEEEEEEEEEEEEEEEEEEEEEEEEEEEEEEEEEEEEE
  .                                         EEEEEEEEEEEEEEEEEEEEEEEEDDDDDEEEEEEEEEEEEEEEEEEEEEEEE
  +                                        EEEEEEEEEEEEEEEEEEEEEEEEDDDDDDDEEEEEEEEEEEEEEEEEEEEEEEE
  .                                   EEEEEEEEEEEEEEEEEEEEEEEEDDDDDDDDDDDDDDDDDEEEEEEEEEEEEEEEEEEEEEEEE
  .                                  EEEEEEEEEEEEEEEEEEEEEEEEDDDDDDDDDDDDDDDDDDDEEEEEEEEEEEEEEEEEEEEEEEE
  .                             EEEEEEEEEEEEEEEEEEEEEEEEDDDDDDDDDDDDDDDDDDDDDDDDDDDDDEEEEEEEEEEEEEEEEEEEEE
  .                            EEEEEEEEEEEEEEEEEEEEEEEEDDDDDDDDDDDDDDDDDDDDDDDDDDDDDDDEEEEEEEEEEEEEEEEEEEE
 70                       EEEEEEEEEEEEEEEEEEEEEEEEDDDDDDDDDDDDDDDDDDDDDDDDDDDDDDDDDDDDDDDDDEEEEEEEEEEEEEEE
  .                      EEEEEEEEEEEEEEEEEEEEEEEEDDDDDDDDDDDDDDDDDDDDDDDDDDDDDDDDDDDDDDDDDDDEEEEEEEEEEEEEE
  .                 EEEEEEEEEEEEEEEEEEEEEEEEDDDDDDDDDDDDDDDDDDDDDDDDDDDDDDDDDDDDDDDDDDDDDDDDDDDDDEEEEEEEEE
  .                EEEEEEEEEEEEEEEEEEEEEEEEDDDDDDDDDDDDDDDDDDDDDDDDDDDDDDDDDDDDDDDDDDDDDDDDDDDDDDDEEEEEEEE
  .           EEEEEEEEEEEEEEEEEEEEEEEEDDDDDDDDDDDDDDDDDDDDDDDDDDDDDDDDDDDDDDDDDDDDDDDDDDDDDDDDDDDDDDDDDEEE
  +          EEEEEEEEEEEEEEEEEEEEEEEEDDDDDDDDDDDDDDDDDDDDDDDDDDDDDDDDDDDDDDDDDDDDDDDDDDDDDDDDDDDDDDDDDDDEE
  .     EEEEEEEEEEEEEEEEEEEEEEEEDDDDDDDDDDDDDDDDDDDDDDDDDDDDDDDDDDDDAAAAADDDDDDDDDDDDDDDDDDDDDDDDDDDDDDDDD
  .    EEEEEEEEEEEEEEEEEEEEEEEEDDDDDDDDDDDDDDDDDDDDDDDDDDDDDDDDDDDDAAAAAAADDDDDDDDDDDDDDDDDDDDDDDDDDDDDDDD
  .    EEEEEEEEEEEEEEEEEEEDDDDDDDDDDDDDDDDDDDDDDDDDDDDDDDDDDDDAAAAAAAAAAAAAAAAADDDDDDDDDDDDDDDDDDDDDDDDDDD
  .     EEEEEEEEEEEEEEEEEDDDDDDDDDDDDDDDDDDDDDDDDDDDDDDDDDDDDAAAAAAAAAAAAAAAAAAADDDDDDDDDDDDDDDDDDDDDDDDDD
 60     EEEEEEEEEEEEDDDDDDDDDDDDDDDDDDDDDDDDDDDDDDDDDDDDAAAAAAAAAAAAAAAAAAAAAAAAAAAAADDDDDDDDDDDDDDDDDDDDD
  .    EEEEEEEEEEEEDDDDDDDDDDDDDDDDDDDDDDDDDDDDDDDDDDDDAAAAAAAAAAAAAAAAAAAAAAAAAAAAAAADDDDDDDDDDDDDDDDDDDD
  .    EEEEEEEEEEEEDDDDDDDDDDDDDDDDDDDDDDDDDDDDDDDAAAAAAAAAAAAAAAAAAAAAAAAAAAAAAAAAAAAAAAAAADDDDDDDDDDDDDDD
  .     EEEEEEEEEEEEDDDDDDDDDDDDDDDDDDDDDDDDDDDDDAAAAAAAAAAAAAAAAAAAAAAAAAAAAAAAAAAAAAAAAAAAADDDDDDDDDDDDDD
  .     EEEEEEEEEEEEDDDDDDDDDDDDDDDDDDDDDDDDAAAAAAAAAAAAAAAAAAAAAAAAAAAAAAAAAAAAAAAAAAAAAAAAAAAAAAADDDDDDDDD
  +    EEEEEEEEEEEEDDDDDDDDDDDDDDDDDDDDDDDDAAAAAAAAAAAAAAAAAAAAAAAAAAAAAAAAAAAAAAAAAAAAAAAAAAAAAAAAADDDDDDDD
  .    EEEEEEEEEEEEDDDDDDDDDDDDDDDDDDDAAAAAAAAAAAAAAAAAAAAAAAAAAAAAAAAAAAAFFFFFAAAAAAAAAAAAAAAAAAADDDDDDDD
  .     EEEEEEEEEEEEDDDDDDDDDDDDDDDDDAAAAAAAAAAAAAAAAAAAAAAAAAAAAAAAAAAAAFFFFFFFAAAAAAAAAAAAAAAAADDDDDDDDD
  .     EEEEEEEEEEEEDDDDDDDDDDDDDDDDDAAAAAAAAAAAAAAAAAAAAAAAAAAAAAAAAAAAAFFFFFFFAAAAAAAAAAAAAAAAADDDDDDDDD
  .    EEEEEEEEEEEEDDDDDDDDDDDDDDDDDDDAAAAAAAAAAAAAAAAAAAAAAAAAAAAAAAAAAAAFFFFFAAAAAAAAAAAAAAAAAAADDDDDDDD
 50    EEEEEEEEEEEEDDDDDDDDDDDDDDDDDDDFFFFFAAAAAAAAAAAAAAAAAAAAAAAAAAAAAAAAAAAAAAAAAAAAAAAAAAAAAAAAAAAADDD
  .     EEEEEEEEEEEEDDDDDDDDDDDDDDDDDFFFFFFFAAAAAAAAAAAAAAAAAAAAAAAAAAAAAAAAAAAAAAAAAAAAAAAAAAAAAAAAAAAADD
  .     EEEEEEEEEEEEDDDDDDDDDDDDDDDDDFFFFFFFAAAAAAAAAAAAAAAAAAAAAAAAAAAAAAAAAAAAAAAAAAAAAAAAAAAAAAAAAAAADD
  .    EEEEEEEEEEEEDDDDDDDDDDDDDDDDDDDFFFFFAAAAAAAAAAAAAAAAAAAAAAAAAAAAAAAAAAAAAAAAAAAAAAAAAAAAAAAAAAAADDD
  .    EEEEEEEEEEEEDDDDDDDDDDDDDDDDDDDAAAAAAAAAAAAAAAAAAAAAAAAAAAAAAAAAAAAAAAAAAAAAAAAFFFFFAAAAAAAAAAAADDD
  +     EEEEEEEEEEEEDDDDDDDDDDDDDDDDDAAAAAAAAAAAAAAAAAAAAAAAAAAAAAAAAAAAAAAAAAAAAAAAAFFFFFFFAAAAAAAAAAAADD
  .     EEEEEEEEEEEEDDDDDDDDDDDDDDDDDAAAAAAAAAAAAAAAAAAAAAAAAAAAAAAAAAAAAAAAAAAAAAAAAFFFFFFFAAAAAAAAAAAADD
  .    EEEEEEEEEEEEDDDDDDDDDDDDDDDDDDDAAAAAAAAAAAAAAAAAAAAAAAAAAAAAAAAAAAAAAAAAAAAAAAAFFFFFAAAAAAAAAAAADDD
  .    EEEEEEEEEEEEDDDDDDDDDDDDDDDDDDDAAAAAAAAAAAFFFFFAAAAAAAAAAAAAAAAAAAAAAAAAAAAAAAAAAAAAAAAAAAAAAAAAADDD
  .     EEEEEEEEEEEEDDDDDDDDDDDDDDDDDAAAAAAAAAAAFFFFFFFAAAAAAAAAAAAAAAAAAAAAAAAAAAAAAAAAAAAAAAAAAAAAAAAAADD
 40     EEEEEEEEEEEEDDDDDDDDDDDDDDDDDAAAAAAAAAAAFFFFFFFAAAAAAAAAAAAAAAAAAAAAAAAAAAAAAAAAAAAAAAAAAAAAAAAAADD
  .    EEEEEEEEEEEEDDDDDDDDDDDDDDDDDDDAAAAAAAAAAAFFFFFAAAAAAAAAAAAAAAAAAAAAAAAAAAAAAAAAAAAAAAAAAAAAAAAAADDD
  .    EEEEEEEEEEEEDDDDDDDDDDDDDDDDDDDAAAAAAAAAAAAAAAAAAAAAAAAAAAAAAAAAAAAAAAAAAAAAAAAAAAAAAAAAAAAFFFFFDDD
  .     EEEEEEEEEEEEDDDDDDDDDDDDDDDDDAAAAAAAAAAAAAAAAAAAAAAAAAAAAAAAAAAAAAAAAAAAAAAAAAAAAAAAAAAAAAFFFFFFFDD
```

101

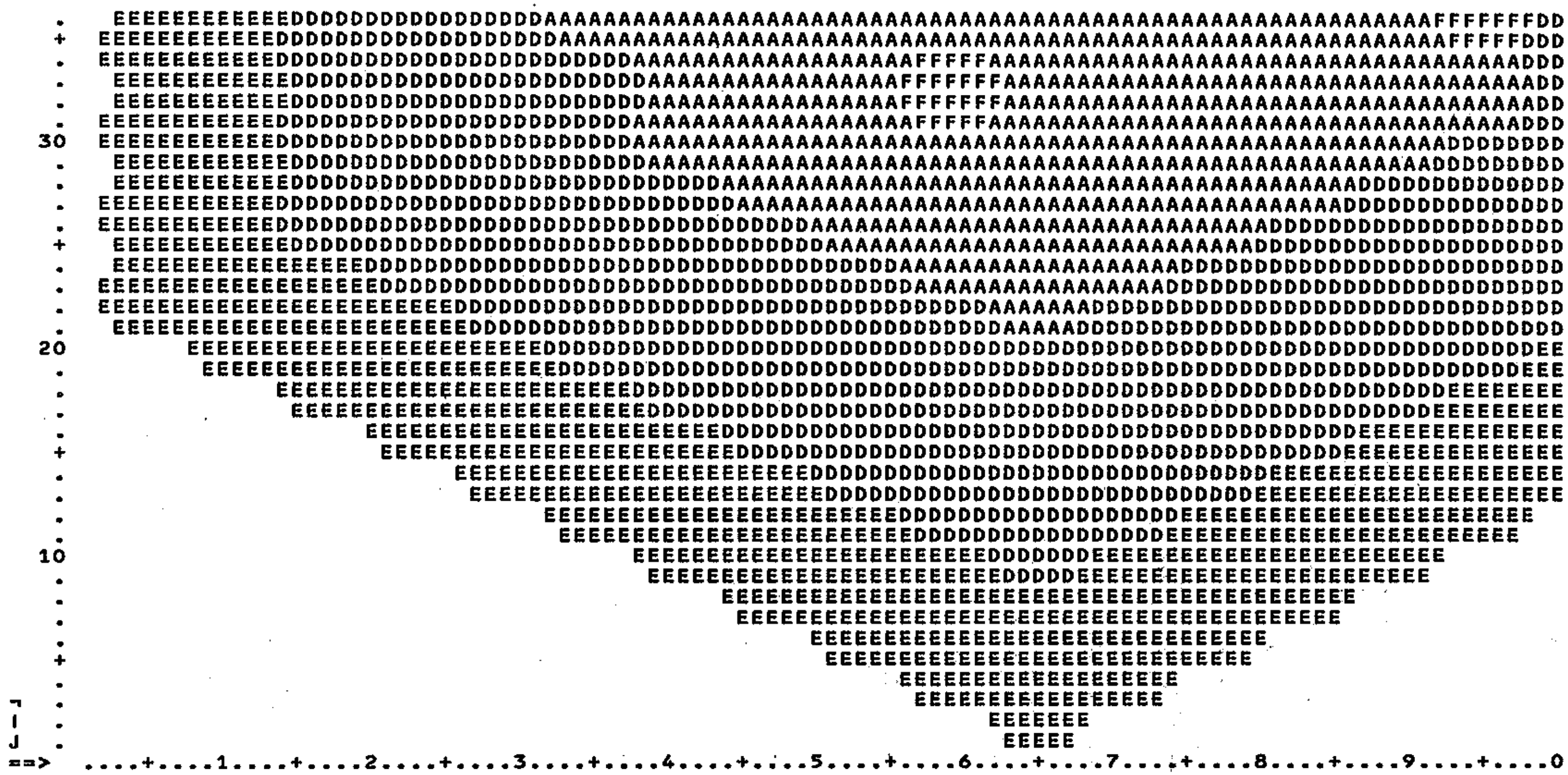
30
20
10
==>
....+....1....+....2....+....3....+....4....+....5....+....6....+....7....+....8....+....9....+....0

```
              *****  REGION ASSIGNMENTS TO MESH INTERVALS  *****  - PAGE 2 -

             ((IREGN(I,J),I=1,MAXI),J=1,MAXJ)
                     REGION NUMBERS ASSIGNED TO MESH INTERVALS
                                        AXIAL POSITION : H(CM)=  73.36 -   74.57
--- REMARKS ---
 :NO REGION
1:KCORE1     2:KCORE2     3:KCOR3I     4:KCOR3O     5:KCORE4     6:KCORE5
7:KTYPEB     8:KTYPEC     9:KCMTYB     A:KINSLT     B:KLSLD      C:KUSLD
D:KRSLDC     E:KNTSLD     F:KCRADP     G:KCRABS     H:KINUSD     I:KLCRDP
 X-DIRECTION RANGE :101 - 129
 ==>  ....+....1....+....2....+....3
    .
    .
    .
    .
   80
    .
    .
    .
    .
    .
    +
    .
    .
    . EEE
    . EEEE
   70 EEEEEEEEE
    . EEEEEEEEEE
    . EEEEEEEEEEEEEEE
    . EEEEEEEEEEEEEEEE
    . EEEEEEEEEEEEEEEEEEEEEE
    + EEEEEEEEEEEEEEEEEEEEEE
    . DDDEEEEEEEEEEEEEEEEEEEEEEEEE
    . DDDDEEEEEEEEEEEEEEEEEEEEEEEEE
    . DDDDDDDDDEEEEEEEEEEEEEEEEEEEE
    . DDDDDDDDDEEEEEEEEEEEEEEEEEEEE
   60 DDDDDDDDDDDDDDDEEEEEEEEEEEEE
    . DDDDDDDDDDDDDDDDEEEEEEEEEEEEE
    . DDDDDDDDDDDDDDDDEEEEEEEEEEEEE
    . DDDDDDDDDDDDDDDDEEEEEEEEEEEE
    . DDDDDDDDDDDDDDDDEEEEEEEEEEEE
    + DDDDDDDDDDDDDDDDEEEEEEEEEEEEE
    . DDDDDDDDDDDDDDDDEEEEEEEEEEEEE
    . DDDDDDDDDDDDDDDDEEEEEEEEEEEE
    . DDDDDDDDDDDDDDDDEEEEEEEEEEEE
    . DDDDDDDDDDDDDDDDEEEEEEEEEEEEE
   50 DDDDDDDDDDDDDDDDEEEEEEEEEEEEE
    . DDDDDDDDDDDDDDDDEEEEEEEEEEEE
    . DDDDDDDDDDDDDDDDEEEEEEEEEEEE
    . DDDDDDDDDDDDDDDDEEEEEEEEEEEEE
    . DDDDDDDDDDDDDDDDEEEEEEEEEEEEE
    + DDDDDDDDDDDDDDDDEEEEEEEEEEEE
    . DDDDDDDDDDDDDDDDEEEEEEEEEEEE
    . DDDDDDDDDDDDDDDDEEEEEEEEEEEEE
    . DDDDDDDDDDDDDDDDEEEEEEEEEEEEE
    . DDDDDDDDDDDDDDDDEEEEEEEEEEEE
   40 DDDDDDDDDDDDDDDDEEEEEEEEEEEE
    . DDDDDDDDDDDDDDDDEEEEEEEEEEEEE
    . DDDDDDDDDDDDDDDDEEEEEEEEEEEEE
    . DDDDDDDDDDDDDDDDEEEEEEEEEEEE
```

```
  . DDDDDDDDDDDDDDDDEEEEEEEEEEEE
  + DDDDDDDDDDDDDDDDEEEEEEEEEEEE
  . DDDDDDDDDDDDDDDDEEEEEEEEEEEE
  . DDDDDDDDDDDDDDDDEEEEEEEEEEEE
  . DDDDDDDDDDDDDDDDEEEEEEEEEEEE
  . DDDDDDDDDDDDDDDDEEEEEEEEEEEE
 30 DDDDDDDDDDDDDDDDEEEEEEEEEEEE
  . DDDDDDDDDDDDDDDDEEEEEEEEEEEE
  . DDDDDDDDDDDDDDDDEEEEEEEEEEEE
  . DDDDDDDDDDDDDDDDEEEEEEEEEEEE
  . DDDDDDDDDDDDDDDDEEEEEEEEEEEE
  + DDDDDDDDDDDDDDDDEEEEEEEEEEEE
  . DDDDDDDDDDEEEEEEEEEEEEEEEEEE
  . DDDDDDDDDDEEEEEEEEEEEEEEEEEE
  . DDDDEEEEEEEEEEEEEEEEEEEEEEEE
  . DDDEEEEEEEEEEEEEEEEEEEEEEEEE
 20 EEEEEEEEEEEEEEEEEEEEEEEEEEEE
  . EEEEEEEEEEEEEEEEEEEEEEEEEEEE
  . EEEEEEEEEEEEEEEEEEEEEEEEEEEE
  . EEEEEEEEEEEEEEEEEEEEEEEEEEEE
  . EEEEEEEEEEEEEEEEEEEEEEEEEEEE
  + EEEEEEEEEEEEEEEEEEEEEEEEEEEE
  . EEEEEEEEEEEEEEEEEEEEEEEEEEEE
  . EEEEEEEEEEEEEEEEEEEEEEEEEEEE
  . EEEEEEEEEEEEEEEEEEEEEEEEEEEE
 10
  .
  .
  .
  .
  +
  .
  .
  .
  .
==>  ....+....1....+....2....+....3
```

***** REGION ASSIGNMENTS TO MESH INTERVALS ***** - PAGE 1 -

```
      ((IREGN(I,J),I=1,MAXI),J=1,MAXJ)
              REGION NUMBERS ASSIGNED TO MESH INTERVALS
                                AXIAL POSITION : H(CM)=  74.57 -   80.53
--- REMARKS ---
 :NO REGION
1:KCORE1     2:KCORE2     3:KCOR3I     4:KCOR3O     5:KCORE4     6:KCORE5
7:KTYPEB     8:KTYPEC     9:KCMTYB     A:KINSLT     B:KLSLD      C:KUSLD
D:KRSLDC     E:KNTSLD     F:KCRADP     G:KCRABS     H:KINUSD     I:KLCRDP
 X-DIRECTION RANGE :  1 - 100
==>  ....+....1....+....2....+....3....+....4....+....5....+....6....+....7....+....8....+....9....+....0
  .                                                                 EEEEE
  .                                                                EEEEEEE
  .                                                           EEEEEEEEEEEEEEEEE
  .                                                          EEEEEEEEEEEEEEEEEEE
 80                                                    EEEEEEEEEEEEEEEEEEEEEEEEEEEEE
  .                                                   EEEEEEEEEEEEEEEEEEEEEEEEEEEEEEE
  .                                              EEEEEEEEEEEEEEEEEEEEEEEEEEEEEEEEEEEEEEEEE
  .                                             EEEEEEEEEEEEEEEEEEEEEEEEEEEEEEEEEEEEEEEEEEE
  .                                        EEEEEEEEEEEEEEEEEEEEEEEEDDDDEEEEEEEEEEEEEEEEEEEEEEEEE
  +                                       EEEEEEEEEEEEEEEEEEEEEEEEDDDDDDEEEEEEEEEEEEEEEEEEEEEEEEE
  .                                  EEEEEEEEEEEEEEEEEEEEEEEEDDDDDDDDDDDDDDDDDEEEEEEEEEEEEEEEEEEEEEEEE
  .                                 EEEEEEEEEEEEEEEEEEEEEEEEDDDDDDDDDDDDDDDDDDEEEEEEEEEEEEEEEEEEEEEEEEE
  .                            EEEEEEEEEEEEEEEEEEEEEEEEDDDDDDDDDDDDDDDDDDDDDDDDDDDDEEEEEEEEEEEEEEEEEEEEEE
  .                           EEEEEEEEEEEEEEEEEEEEEEEEDDDDDDDDDDDDDDDDDDDDDDDDDDDDDDDEEEEEEEEEEEEEEEEEEEE
 70                       EEEEEEEEEEEEEEEEEEEEEEEEDDDDDDDDDDDDDDDDDDDDDDDDDDDDDDDDDDDDDDDDDEEEEEEEEEEEEEEE
  .                      EEEEEEEEEEEEEEEEEEEEEEEEDDDDDDDDDDDDDDDDDDDDDDDDDDDDDDDDDDDDDDDDDDDEEEEEEEEEEEEEE
  .                 EEEEEEEEEEEEEEEEEEEEEEEEDDDDDDDDDDDDDDDDDDDDDDDDDDDDDDDDDDDDDDDDDDDDDDDDDDDDEEEEEEEEEE
  .                EEEEEEEEEEEEEEEEEEEEEEEEDDDDDDDDDDDDDDDDDDDDDDDDDDDDDDDDDDDDDDDDDDDDDDDDDDDDDDEEEEEEEEE
  .           EEEEEEEEEEEEEEEEEEEEEEEEDDDDDDDDDDDDDDDDDDDDDDDDDDDDDDDDDDDDDDDDDDDDDDDDDDDDDDDDDDDDDDDDDEEE
  +          EEEEEEEEEEEEEEEEEEEEEEEEDDDDDDDDDDDDDDDDDDDDDDDDDDDDDDDDDDDDDDDDDDDDDDDDDDDDDDDDDDDDDDDDDDDEE
  .     EEEEEEEEEEEEEEEEEEEEEEEEDDDDDDDDDDDDDDDDDDDDDDDDDDDDDDDDDDDDCCCCCDDDDDDDDDDDDDDDDDDDDDDDDDDDDDDDD
  .    EEEEEEEEEEEEEEEEEEEEEEEEDDDDDDDDDDDDDDDDDDDDDDDDDDDDDDDDDDDDCCCCCCCDDDDDDDDDDDDDDDDDDDDDDDDDDDDDDDD
  .    EEEEEEEEEEEEEEEEEEEDDDDDDDDDDDDDDDDDDDDDDDDDDDDDDDDDDDDDDDDCCCCCCCCCCCCCCCCCDDDDDDDDDDDDDDDDDDDDDDDDDDD
  .     EEEEEEEEEEEEEEEEEDDDDDDDDDDDDDDDDDDDDDDDDDDDDDDDDDDDDDDDDDDDCCCCCCCCCCCCCCCCCCCDDDDDDDDDDDDDDDDDDDDDDDDDD
 60     EEEEEEEEEEEEDDDDDDDDDDDDDDDDDDDDDDDDDDDDDDDDDDDDCCCCCCCCCCCCCCCCCCCCCCCCCCCCCDDDDDDDDDDDDDDDDDDDDD
  .    EEEEEEEEEEEEDDDDDDDDDDDDDDDDDDDDDDDDDDDDDDDDDDDDCCCCCCCCCCCCCCCCCCCCCCCCCCCCCCCDDDDDDDDDDDDDDDDDDDD
  .    EEEEEEEEEEEEDDDDDDDDDDDDDDDDDDDDDDDDDDDDDDDCCCCCCCCCCCCCCCCCCCCCCCCCCCCCCCCCCCCCCCCCDDDDDDDDDDDDDDD
  .     EEEEEEEEEEEEDDDDDDDDDDDDDDDDDDDDDDDDDDDDDCCCCCCCCCCCCCCCCCCCCCCCCCCCCCCCCCCCCCCCCCCCDDDDDDDDDDDDDD
  .     EEEEEEEEEEEEDDDDDDDDDDDDDDDDDDDDDDDDCCCCCCCCCCCCCCCCCCCCCCCCCCCCCCCCCCCCCCCCCCCCCCCCCCCCDDDDDDDDDD
  +    EEEEEEEEEEEEDDDDDDDDDDDDDDDDDDDDDDDDDCCCCCCCCCCCCCCCCCCCCCCCCCCCCCCCCCCCCCCCCCCCCCCCCCCCCCCDDDDDDDD
  .    EEEEEEEEEEEEDDDDDDDDDDDDDDDDDDDDCCCCCCCCCCCCCCCCCCCCCCCCCCCCCCCCCCCFFFFFCCCCCCCCCCCCCCCCCCCDDDDDDDD
  .     EEEEEEEEEEEEDDDDDDDDDDDDDDDDDDCCCCCCCCCCCCCCCCCCCCCCCCCCCCCCCCCCCFFFFFFFCCCCCCCCCCCCCCCCCDDDDDDDDD
  .     EEEEEEEEEEEEDDDDDDDDDDDDDDDDDDCCCCCCCCCCCCCCCCCCCCCCCCCCCCCCCCCCCFFFFFFFCCCCCCCCCCCCCCCCCDDDDDDDDD
  .    EEEEEEEEEEEEDDDDDDDDDDDDDDDDDDDDCCCCCCCCCCCCCCCCCCCCCCCCCCCCCCCCCCCFFFFFCCCCCCCCCCCCCCCCCCCDDDDDDDD
 50    EEEEEEEEEEEEDDDDDDDDDDDDDDDDDDDDFFFFFCCCCCCCCCCCCCCCCCCCCCCCCCCCCCCCCCCCCCCCCCCCCCCCCCCCCCCCCCCCDDD
  .     EEEEEEEEEEEEDDDDDDDDDDDDDDDDDDFFFFFFFCCCCCCCCCCCCCCCCCCCCCCCCCCCCCCCCCCCCCCCCCCCCCCCCCCCCCCCCCCCDD
  .     EEEEEEEEEEEEDDDDDDDDDDDDDDDDDDFFFFFFFCCCCCCCCCCCCCCCCCCCCCCCCCCCCCCCCCCCCCCCCCCCCCCCCCCCCCCCCCCCDD
  .    EEEEEEEEEEEEDDDDDDDDDDDDDDDDDDDDFFFFFCCCCCCCCCCCCCCCCCCCCCCCCCCCCCCCCCCCCCCCCCCCCCCCCCCCCCCCCCCCDDD
  .    EEEEEEEEEEEEDDDDDDDDDDDDDDDDDDDDCCCCCCCCCCCCCCCCCCCCCCCCCCCCCCCCCCCCCCCCCCCCCCFFFFFCCCCCCCCCCCCCDDD
  +     EEEEEEEEEEEEDDDDDDDDDDDDDDDDDDCCCCCCCCCCCCCCCCCCCCCCCCCCCCCCCCCCCCCCCCCCCCCCFFFFFFFCCCCCCCCCCCCCDD
  .     EEEEEEEEEEEEDDDDDDDDDDDDDDDDDDCCCCCCCCCCCCCCCCCCCCCCCCCCCCCCCCCCCCCCCCCCCCCCFFFFFFFCCCCCCCCCCCCCDD
  .    EEEEEEEEEEEEDDDDDDDDDDDDDDDDDDDDCCCCCCCCCCCCCCCCCCCCCCCCCCCCCCCCCCCCCCCCCCCCCCFFFFFCCCCCCCCCCCCCDDD
  .    EEEEEEEEEEEEDDDDDDDDDDDDDDDDDDDDCCCCCCCCCCCCFFFFFCCCCCCCCCCCCCCCCCCCCCCCCCCCCCCCCCCCCCCCCCCCCCCDDD
  .     EEEEEEEEEEEEDDDDDDDDDDDDDDDDDDCCCCCCCCCCCCFFFFFFFCCCCCCCCCCCCCCCCCCCCCCCCCCCCCCCCCCCCCCCCCCCCCCCDD
 40     EEEEEEEEEEEEDDDDDDDDDDDDDDDDDDCCCCCCCCCCCCFFFFFFFCCCCCCCCCCCCCCCCCCCCCCCCCCCCCCCCCCCCCCCCCCCCCCCDD
  .    EEEEEEEEEEEEDDDDDDDDDDDDDDDDDDDDCCCCCCCCCCCCFFFFFCCCCCCCCCCCCCCCCCCCCCCCCCCCCCCCCCCCCCCCCCCCCCCDDD
  .    EEEEEEEEEEEEDDDDDDDDDDDDDDDDDDDDCCCCCCCCCCCCCCCCCCCCCCCCCCCCCCCCCCCCCCCCCCCCCCCCCCCCCCCCCCCFFFFFDDD
  .     EEEEEEEEEEEEDDDDDDDDDDDDDDDDDDCCCCCCCCCCCCCCCCCCCCCCCCCCCCCCCCCCCCCCCCCCCCCCCCCCCCCCCCCCCFFFFFFFDD
```

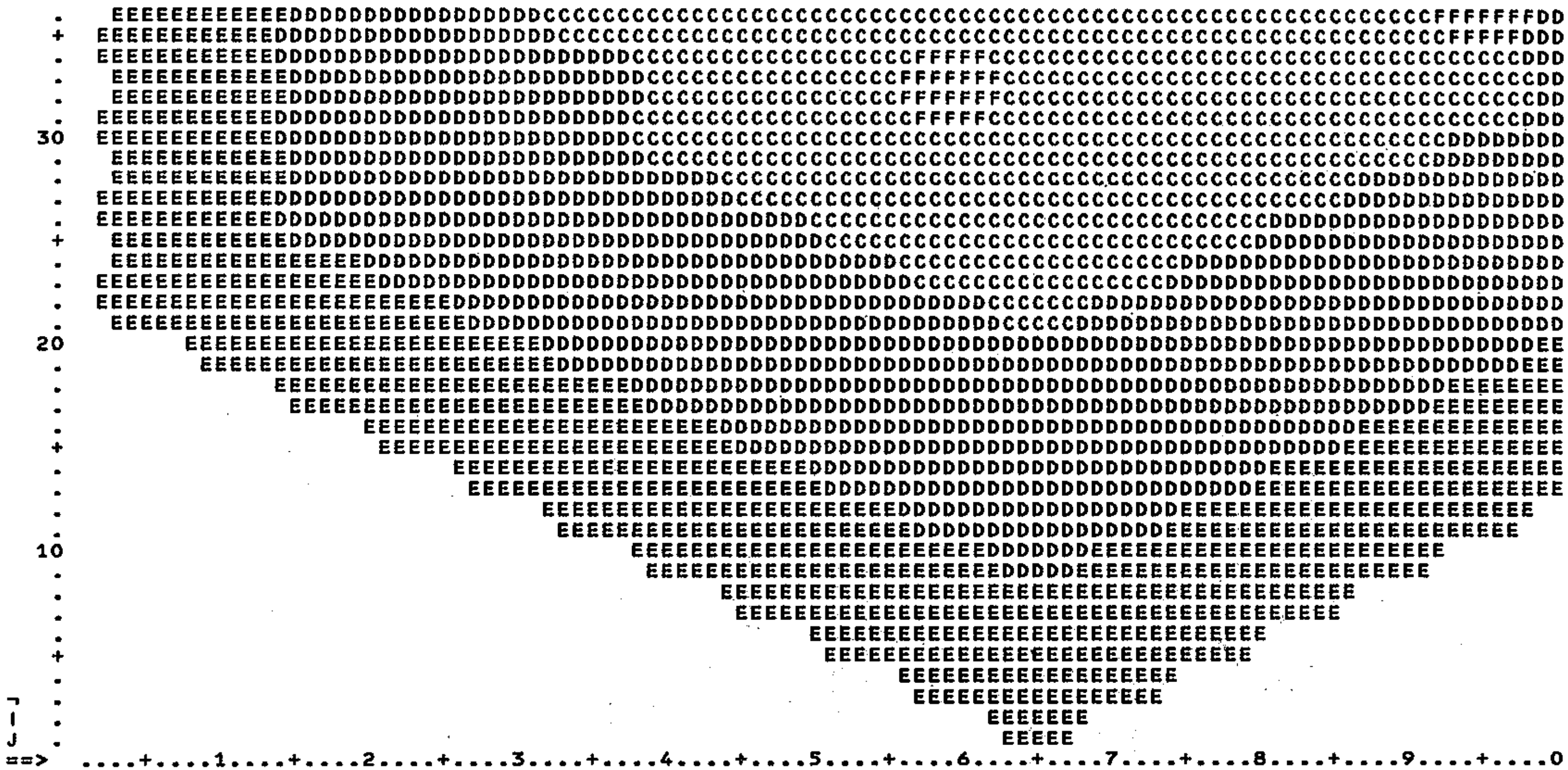
30
20
10
==> ....+....1....+....2....+....3....+....4....+....5....+....6....+....7....+....8....+....9....+....0

```
            *****  REGION ASSIGNMENTS TO MESH INTERVALS  *****  - PAGE 2 -

            ((IREGN(I,J),I=1,MAXI),J=1,MAXJ)
                    REGION NUMBERS ASSIGNED TO MESH INTERVALS
                                        AXIAL POSITION : H(CM)=  74.57 -   80.53
--- REMARKS ---
 :NO REGION
1:KCORE1      2:KCORE2      3:KCOR3I      4:KCOR3O      5:KCORE4      6:KCORE5
7:KTYPEB      8:KTYPEC      9:KCMTYB      A:KINSLT      B:KLSLD       C:KUSLD
D:KRSLDC      E:KNTSLD      F:KCRADP      G:KCRABS      H:KINUSD      I:KLCRDP
 X-DIRECTION RANGE :101 - 129
 ==>  ....+....1....+....2....+....3
    .
    .
    .
    .
   80
    .
    .
    .
    .
    .
    +
    .
    .
    . EEE
    .. EEEE
   70 EEEEEEEEE
    . EEEEEEEEEE
    . EEEEEEEEEEEEEEE
    . EEEEEEEEEEEEEEEE
    . EEEEEEEEEEEEEEEEEEEEEE
    + EEEEEEEEEEEEEEEEEEEEEEE
    . DDDEEEEEEEEEEEEEEEEEEEEEEEE
    . DDDDEEEEEEEEEEEEEEEEEEEEEEEE
    . DDDDDDDDDEEEEEEEEEEEEEEEEEEE
    . DDDDDDDDDDEEEEEEEEEEEEEEEEEE
   60 DDDDDDDDDDDDDDDEEEEEEEEEEEE
    . DDDDDDDDDDDDDDDDEEEEEEEEEEEE
    . DDDDDDDDDDDDDDDDEEEEEEEEEEEE
    . DDDDDDDDDDDDDDDDEEEEEEEEEEEE
    . DDDDDDDDDDDDDDDDEEEEEEEEEEEE
    + DDDDDDDDDDDDDDDDEEEEEEEEEEEE
    . DDDDDDDDDDDDDDDDEEEEEEEEEEEE
    . DDDDDDDDDDDDDDDDEEEEEEEEEEEE
    . DDDDDDDDDDDDDDDDEEEEEEEEEEEE
    . DDDDDDDDDDDDDDDDEEEEEEEEEEEE
   50 DDDDDDDDDDDDDDDDEEEEEEEEEEEE
    . DDDDDDDDDDDDDDDDEEEEEEEEEEEE
    . DDDDDDDDDDDDDDDDEEEEEEEEEEEE
    . DDDDDDDDDDDDDDDDEEEEEEEEEEEE
    . DDDDDDDDDDDDDDDDEEEEEEEEEEEE
    + DDDDDDDDDDDDDDDDEEEEEEEEEEEE
    . DDDDDDDDDDDDDDDDEEEEEEEEEEEE
    . DDDDDDDDDDDDDDDDEEEEEEEEEEEE
    . DDDDDDDDDDDDDDDDEEEEEEEEEEEE
    . DDDDDDDDDDDDDDDDEEEEEEEEEEEE
   40 DDDDDDDDDDDDDDDDEEEEEEEEEEEE
    . DDDDDDDDDDDDDDDDEEEEEEEEEEEE
    . DDDDDDDDDDDDDDDDEEEEEEEEEEEE
    . DDDDDDDDDDDDDDDDEEEEEEEEEEEE
```

```
   . DDDDDDDDDDDDDDDDEEEEEEEEEEEE
   + DDDDDDDDDDDDDDDDEEEEEEEEEEEE
   . DDDDDDDDDDDDDDDDEEEEEEEEEEEE
   . DDDDDDDDDDDDDDDDEEEEEEEEEEEE
   . DDDDDDDDDDDDDDDDEEEEEEEEEEEE
   . DDDDDDDDDDDDDDDDEEEEEEEEEEEE
  30 DDDDDDDDDDDDDDDDEEEEEEEEEEEE
   . DDDDDDDDDDDDDDDDEEEEEEEEEEEE
   . DDDDDDDDDDDDDDDDEEEEEEEEEEEE
   . DDDDDDDDDDDDDDDDEEEEEEEEEEEE
   . DDDDDDDDDDDDDDDDEEEEEEEEEEEE
   + DDDDDDDDDDDDDDDDEEEEEEEEEEEE
   . DDDDDDDDDDEEEEEEEEEEEEEEEEEE
   . DDDDDDDDDEEEEEEEEEEEEEEEEEEE
   . DDDDEEEEEEEEEEEEEEEEEEEEEEEE
   . DDDEEEEEEEEEEEEEEEEEEEEEEEEE
  20 EEEEEEEEEEEEEEEEEEEEEEEEEEE
   . EEEEEEEEEEEEEEEEEEEEEEEEEEE
   . EEEEEEEEEEEEEEEEEEEEEEEEEEE
   . EEEEEEEEEEEEEEEEEEEEEEEEEEE
   . EEEEEEEEEEEEEEEEEEEEEEEEEEE
   + EEEEEEEEEEEEEEEEEEEEEEEEEEE
   . EEEEEEEEEEEEEEEEEEEEEEEEEEE
   . EEEEEEEEEEEEEEEEEEEEEEEEEEE
   .
   .
  10
   .
   .
   .
   .
   +
   .
   .
   .
   .
==>  ....+....1....+....2....+....3
```

```
          *****  REGION ASSIGNMENTS TO MESH INTERVALS  *****  - PAGE 1 -

         ((IREGN(I,J),I=1,MAXI),J=1,MAXJ)
                 REGION NUMBERS ASSIGNED TO MESH INTERVALS
                                   AXIAL POSITION : H(CM)=  80.53 -   95.53
 --- REMARKS ---
  :NO REGION
 1:KCORE1      2:KCORE2      3:KCOR3I      4:KCOR3O      5:KCORE4      6:KCORE5
 7:KTYPEB      8:KTYPEC      9:KCMTYB      A:KINSLT      B:KLSLD       C:KUSLD
 D:KRSLDC      E:KNTSLD      F:KCRADP      G:KCRABS      H:KINUSD      I:KLCRDP
  X-DIRECTION RANGE :  1 - 100
  ==> ....+....1....+....2....+....3....+....4....+....5....+....6....+....7....+....8....+....9....+....0
   .                                                                EEEEE
   .                                                               EEEEEEE
   .                                                          EEEEEEEEEEEEEEEEE
   .                                                         EEEEEEEEEEEEEEEEEEE
  80                                                    EEEEEEEEEEEEEEEEEEEEEEEEEEEEE
   .                                                   EEEEEEEEEEEEEEEEEEEEEEEEEEEEEEE
   .                                              EEEEEEEEEEEEEEEEEEEEEEEEEEEEEEEEEEEEEEEEE
   .                                             EEEEEEEEEEEEEEEEEEEEEEEEEEEEEEEEEEEEEEEEEEE
   .                                        EEEEEEEEEEEEEEEEEEEEEEEEDDDDDEEEEEEEEEEEEEEEEEEEEEEEE
   +                                       EEEEEEEEEEEEEEEEEEEEEEEEDDDDDDDEEEEEEEEEEEEEEEEEEEEEEEE
   .                                  EEEEEEEEEEEEEEEEEEEEEEEEDDDDDDDDDDDDDDDDDEEEEEEEEEEEEEEEEEEEEEEEE
   .                                 EEEEEEEEEEEEEEEEEEEEEEEEDDDDDDDDDDDDDDDDDDDEEEEEEEEEEEEEEEEEEEEEEEE
   .                            EEEEEEEEEEEEEEEEEEEEEEEEDDDDDDDDDDDDDDDDDDDDDDDDDDDDDEEEEEEEEEEEEEEEEEEEEE
   .                           EEEEEEEEEEEEEEEEEEEEEEEEDDDDDDDDDDDDDDDDDDDDDDDDDDDDDDDEEEEEEEEEEEEEEEEEEEE
  70                      EEEEEEEEEEEEEEEEEEEEEEEEDDDDDDDDDDDDDDDDDDDDDDDDDDDDDDDDDDDDDDDDDEEEEEEEEEEEEEEE
   .                     EEEEEEEEEEEEEEEEEEEEEEEEDDDDDDDDDDDDDDDDDDDDDDDDDDDDDDDDDDDDDDDDDDDEEEEEEEEEEEEEE
   .                EEEEEEEEEEEEEEEEEEEEEEEEDDDDDDDDDDDDDDDDDDDDDDDDDDDDDDDDDDDDDDDDDDDDDDDDDDDDDEEEEEEEEE
   .               EEEEEEEEEEEEEEEEEEEEEEEEDDDDDDDDDDDDDDDDDDDDDDDDDDDDDDDDDDDDDDDDDDDDDDDDDDDDDDEEEEEEEE
   .          EEEEEEEEEEEEEEEEEEEEEEEEDDDDDDDDDDDDDDDDDDDDDDDDDDDDDDDDDDDDDDDDDDDDDDDDDDDDDDDDDDDDDDDDDEEE
   +         EEEEEEEEEEEEEEEEEEEEEEEEDDDDDDDDDDDDDDDDDDDDDDDDDDDDDDDDDDDDDDDDDDDDDDDDDDDDDDDDDDDDDDDDDDDEE
   .    EEEEEEEEEEEEEEEEEEEEEEEEDDDDDDDDDDDDDDDDDDDDDDDDDDDDDDDDDDDDCCCCCDDDDDDDDDDDDDDDDDDDDDDDDDDDDDDDD
   .   EEEEEEEEEEEEEEEEEEEEEEEEDDDDDDDDDDDDDDDDDDDDDDDDDDDDDDDDDDDDCCCCCCCDDDDDDDDDDDDDDDDDDDDDDDDDDDDDDDD
   .   EEEEEEEEEEEEEEEEEEEDDDDDDDDDDDDDDDDDDDDDDDDDDDDDDDDDDDDCCCCCCCCCCCCCCCCCDDDDDDDDDDDDDDDDDDDDDDDDDDD
   .    EEEEEEEEEEEEEEEEEDDDDDDDDDDDDDDDDDDDDDDDDDDDDDDDDDDDDCCCCCCCCCCCCCCCCCCCDDDDDDDDDDDDDDDDDDDDDDDDDD
  60    EEEEEEEEEEEEDDDDDDDDDDDDDDDDDDDDDDDDDDDDDDDDDDDDCCCCCCCCCCCCCCCCCCCCCCCCCCCCCDDDDDDDDDDDDDDDDDDDDD
   .   EEEEEEEEEEEEDDDDDDDDDDDDDDDDDDDDDDDDDDDDDDDDDDDDCCCCCCCCCCCCCCCCCCCCCCCCCCCCCCCDDDDDDDDDDDDDDDDDDDD
   .   EEEEEEEEEEEEDDDDDDDDDDDDDDDDDDDDDDDDDDDDDDDCCCCCCCCCCCCCCCCCCCCCCCCCCCCCCCCCCCCCCCCCDDDDDDDDDDDDDDD
   .    EEEEEEEEEEEEDDDDDDDDDDDDDDDDDDDDDDDDDDDDDCCCCCCCCCCCCCCCCCCCCCCCCCCCCCCCCCCCCCCCCCCCDDDDDDDDDDDDDD
   .    EEEEEEEEEEEEDDDDDDDDDDDDDDDDDDDDDDDDCCCCCCCCCCCCCCCCCCCCCCCCCCCCCCCCCCCCCCCCCCCCCCCCCCCCCDDDDDDDDD
   +   EEEEEEEEEEEEDDDDDDDDDDDDDDDDDDDDDDDDCCCCCCCCCCCCCCCCCCCCCCCCCCCCCCCCCCCCCCCCCCCCCCCCCCCCCCCDDDDDDDD
   .   EEEEEEEEEEEEDDDDDDDDDDDDDDDDDDDCCCCCCCCCCCCCCCCCCCCCCCCCCCCCCCCCCCCGGGGGCCCCCCCCCCCCCCCCCCCDDDDDDDD
   .    EEEEEEEEEEEEDDDDDDDDDDDDDDDDDCCCCCCCCCCCCCCCCCCCCCCCCCCCCCCCCCCCCGGGGGGGCCCCCCCCCCCCCCCCCDDDDDDDDD
   .    EEEEEEEEEEEEDDDDDDDDDDDDDDDDDCCCCCCCCCCCCCCCCCCCCCCCCCCCCCCCCCCCCGGGGGGGCCCCCCCCCCCCCCCCCDDDDDDDDD
   .   EEEEEEEEEEEEDDDDDDDDDDDDDDDDDDDCCCCCCCCCCCCCCCCCCCCCCCCCCCCCCCCCCCCGGGGGCCCCCCCCCCCCCCCCCCCDDDDDDDD
  50   EEEEEEEEEEEEDDDDDDDDDDDDDDDDDDDGGGGGCCCCCCCCCCCCCCCCCCCCCCCCCCCCCCCCCCCCCCCCCCCCCCCCCCCCCCCCCCCCDDD
   .    EEEEEEEEEEEEDDDDDDDDDDDDDDDDDGGGGGGGCCCCCCCCCCCCCCCCCCCCCCCCCCCCCCCCCCCCCCCCCCCCCCCCCCCCCCCCCCCCDD
   .    EEEEEEEEEEEEDDDDDDDDDDDDDDDDDGGGGGGGCCCCCCCCCCCCCCCCCCCCCCCCCCCCCCCCCCCCCCCCCCCCCCCCCCCCCCCCCCCCDD
   .   EEEEEEEEEEEEDDDDDDDDDDDDDDDDDDDGGGGGCCCCCCCCCCCCCCCCCCCCCCCCCCCCCCCCCCCCCCCCCCCCCCCCCCCCCCCCCCCDDD
   .   EEEEEEEEEEEEDDDDDDDDDDDDDDDDDDDCCCCCCCCCCCCCCCCCCCCCCCCCCCCCCCCCCCCCCCCCCCCCCCCGGGGGCCCCCCCCCCCCDDD
   +    EEEEEEEEEEEEDDDDDDDDDDDDDDDDDCCCCCCCCCCCCCCCCCCCCCCCCCCCCCCCCCCCCCCCCCCCCCCCCGGGGGGGCCCCCCCCCCCCDD
   .    EEEEEEEEEEEEDDDDDDDDDDDDDDDDDCCCCCCCCCCCCCCCCCCCCCCCCCCCCCCCCCCCCCCCCCCCCCCCCGGGGGGGCCCCCCCCCCCCDD
   .   EEEEEEEEEEEEDDDDDDDDDDDDDDDDDDDCCCCCCCCCCCCCCCCCCCCCCCCCCCCCCCCCCCCCCCCCCCCCCCCGGGGGCCCCCCCCCCCCDDD
   .   EEEEEEEEEEEEDDDDDDDDDDDDDDDDDDDCCCCCCCCCCCCGGGGGCCCCCCCCCCCCCCCCCCCCCCCCCCCCCCCCCCCCCCCCCCCCCCCCDDD
   .    EEEEEEEEEEEEDDDDDDDDDDDDDDDDDCCCCCCCCCCCCGGGGGGGCCCCCCCCCCCCCCCCCCCCCCCCCCCCCCCCCCCCCCCCCCCCCCCCDD
  40    EEEEEEEEEEEEDDDDDDDDDDDDDDDDDCCCCCCCCCCCCGGGGGGGCCCCCCCCCCCCCCCCCCCCCCCCCCCCCCCCCCCCCCCCCCCCCCCCDD
   .   EEEEEEEEEEEEDDDDDDDDDDDDDDDDDDDCCCCCCCCCCCCGGGGGCCCCCCCCCCCCCCCCCCCCCCCCCCCCCCCCCCCCCCCCCCCCCCCCDDD
   .   EEEEEEEEEEEEDDDDDDDDDDDDDDDDDDDCCCCCCCCCCCCCCCCCCCCCCCCCCCCCCCCCCCCCCCCCCCCCCCCCCCCCCCCCGGGGGDDD
   .    EEEEEEEEEEEEDDDDDDDDDDDDDDDDDCCCCCCCCCCCCCCCCCCCCCCCCCCCCCCCCCCCCCCCCCCCCCCCCCCCCCCCCCCCGGGGGGGDD
```

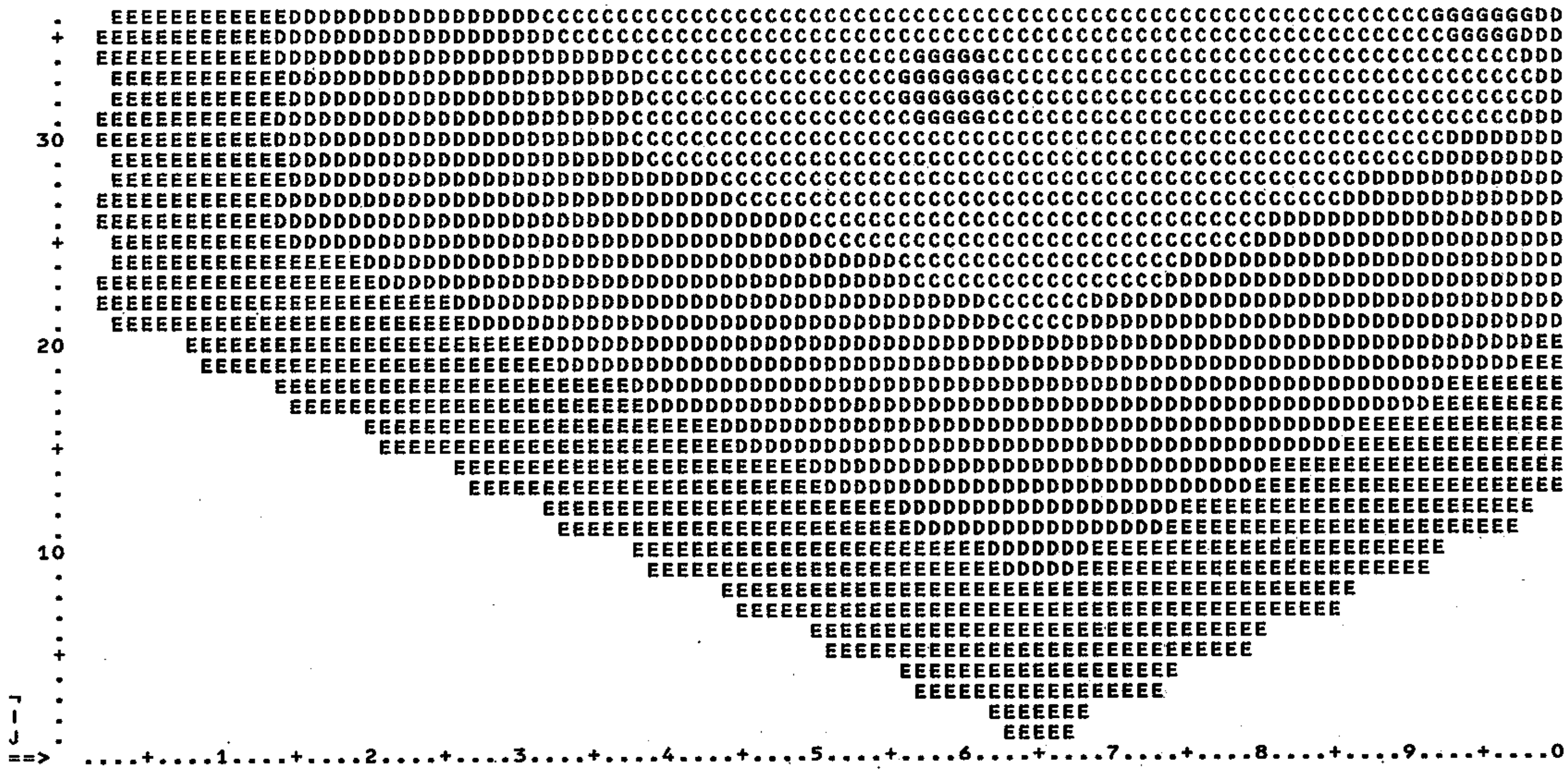
30
20
10
==>
....+....1....+....2....+....3....+....4....+....5....+....6....+....7....+....8....+....9....+....0

```
            *****  REGION ASSIGNMENTS TO MESH INTERVALS  *****  - PAGE 2 -

           ((IREGN(I,J),I=1,MAXI),J=1,MAXJ)
                  REGION NUMBERS ASSIGNED TO MESH INTERVALS
                                    AXIAL POSITION : H(CM)=  80.53 -   95.53
--- REMARKS ---
 :NO REGION
1:KCORE1     2:KCORE2     3:KCOR3I     4:KCOR3O     5:KCORE4     6:KCORE5
7:KTYPEB     8:KTYPEC     9:KCMTYB     A:KINSLT     B:KLSLD      C:KUSLD
D:KRSLDC     E:KNTSLD     F:KCRADP     G:KCRABS     H:KINUSD     I:KLCRDP
 X-DIRECTION RANGE :101 - 129
 ==>  ....+....1....+....2....+....3
    .
    .
    .
    .
   80
    .
    .
    .
    .
    .
    +
    .
    .
    . EEE
    . EEEE
   70 EEEEEEEEE
    . EEEEEEEEEE
    . EEEEEEEEEEEEEEE
    . EEEEEEEEEEEEEEE
    . EEEEEEEEEEEEEEEEEEEEE
    + EEEEEEEEEEEEEEEEEEEEE
    . DDDEEEEEEEEEEEEEEEEEEEEEEEE
    . DDDDEEEEEEEEEEEEEEEEEEEEEEE
    . DDDDDDDDDEEEEEEEEEEEEEEEEEE
    . DDDDDDDDDDEEEEEEEEEEEEEEEE
   60 DDDDDDDDDDDDDDDEEEEEEEEEEEE
    . DDDDDDDDDDDDDDDDEEEEEEEEEEEE
    . DDDDDDDDDDDDDDDDEEEEEEEEEEEE
    . DDDDDDDDDDDDDDDEEEEEEEEEEEE
    . DDDDDDDDDDDDDDDEEEEEEEEEEEE
    + DDDDDDDDDDDDDDDDEEEEEEEEEEEE
    . DDDDDDDDDDDDDDDDEEEEEEEEEEEE
    . DDDDDDDDDDDDDDDEEEEEEEEEEEE
    . DDDDDDDDDDDDDDDEEEEEEEEEEEE
    . DDDDDDDDDDDDDDDDEEEEEEEEEEEE
   50 DDDDDDDDDDDDDDDDEEEEEEEEEEEE
    . DDDDDDDDDDDDDDDEEEEEEEEEEEE
    . DDDDDDDDDDDDDDDEEEEEEEEEEEE
    . DDDDDDDDDDDDDDDDEEEEEEEEEEEE
    . DDDDDDDDDDDDDDDDEEEEEEEEEEEE
    + DDDDDDDDDDDDDDDEEEEEEEEEEEE
    . DDDDDDDDDDDDDDDEEEEEEEEEEEE
    . DDDDDDDDDDDDDDDDEEEEEEEEEEEE
    . DDDDDDDDDDDDDDDDEEEEEEEEEEEE
    . DDDDDDDDDDDDDDDEEEEEEEEEEEE
   40 DDDDDDDDDDDDDDDDEEEEEEEEEEEE
    . DDDDDDDDDDDDDDDDEEEEEEEEEEEE
    . DDDDDDDDDDDDDDDDEEEEEEEEEEEE
    . DDDDDDDDDDDDDDDEEEEEEEEEEEE
```

```
  . DDDDDDDDDDDDDDDDEEEEEEEEEEEE
  + DDDDDDDDDDDDDDDDEEEEEEEEEEEEE
  . DDDDDDDDDDDDDDDDEEEEEEEEEEEEE
  . DDDDDDDDDDDDDDDDEEEEEEEEEEEEE
  . DDDDDDDDDDDDDDDDEEEEEEEEEEEEE
  . DDDDDDDDDDDDDDDDEEEEEEEEEEEEEE
 30 DDDDDDDDDDDDDDDDEEEEEEEEEEEEE
  . DDDDDDDDDDDDDDDDEEEEEEEEEEEEE
  . DDDDDDDDDDDDDDDDEEEEEEEEEEEEE
  . DDDDDDDDDDDDDDDDEEEEEEEEEEEEEE
  . DDDDDDDDDDDDDDDDEEEEEEEEEEEEEE
  + DDDDDDDDDDDDDDDDEEEEEEEEEEEEE
  . DDDDDDDDDDEEEEEEEEEEEEEEEEEEE
  . DDDDDDDDDEEEEEEEEEEEEEEEEEEEE
  . DDDDEEEEEEEEEEEEEEEEEEEEEEEEE
  . DDDEEEEEEEEEEEEEEEEEEEEEEEEE
 20 EEEEEEEEEEEEEEEEEEEEEEE
  . EEEEEEEEEEEEEEEEEEEEE
  . EEEEEEEEEEEEEEEEE
  . EEEEEEEEEEEEEEE
  . EEEEEEEEEEE
  + EEEEEEEEE
  . EEEE
  . EEE
  .
  .
 10
  .
  .
  .
  .
  +
  .
  .
  .
  .
==>  ....+....1....+....2....+....3
```

```
           *****  REGION ASSIGNMENTS TO MESH INTERVALS  *****  - PAGE 1 -

          ((IREGN(I,J),I=1,MAXI),J=1,MAXJ)
                  REGION NUMBERS ASSIGNED TO MESH INTERVALS
                                      AXIAL POSITION : H(CM)=  95.53 -   98.03
 --- REMARKS ---
  :NO REGION
 1:KCORE1      2:KCORE2      3:KCOR3I      4:KCOR3O      5:KCORE4      6:KCORE5
 7:KTYPEB      8:KTYPEC      9:KCMTYB      A:KINSLT      B:KLSLD       C:KUSLD
 D:KRSLDC      E:KNTSLD      F:KCRADP      G:KCRABS      H:KINUSD      I:KLCRDP
  X-DIRECTION RANGE :  1 - 100
  ==>  ....+....1....+....2....+....3....+....4....+....5....+....6....+....7....+....8....+....9....+....0
    .                                                               EEEEE
    .                                                              EEEEEEE
    .                                                         EEEEEEEEEEEEEEEEE
    .                                                        EEEEEEEEEEEEEEEEEEE
   80                                                   EEEEEEEEEEEEEEEEEEEEEEEEEEEEE
    .                                                  EEEEEEEEEEEEEEEEEEEEEEEEEEEEEEE
    .                                             EEEEEEEEEEEEEEEEEEEEEEEEEEEEEEEEEEEEEEEEE
    .                                            EEEEEEEEEEEEEEEEEEEEEEEEEEEEEEEEEEEEEEEEEEE
    .                                       EEEEEEEEEEEEEEEEEEEEEEEEDDDDDEEEEEEEEEEEEEEEEEEEEEEEE
    +                                      EEEEEEEEEEEEEEEEEEEEEEEEDDDDDDDEEEEEEEEEEEEEEEEEEEEEEEE
    .                                 EEEEEEEEEEEEEEEEEEEEEEEEDDDDDDDDDDDDDDDDDEEEEEEEEEEEEEEEEEEEEEEEE
    .                                EEEEEEEEEEEEEEEEEEEEEEEEDDDDDDDDDDDDDDDDDDDEEEEEEEEEEEEEEEEEEEEEEEE
    .                           EEEEEEEEEEEEEEEEEEEEEEEEDDDDDDDDDDDDDDDDDDDDDDDDDDDDDEEEEEEEEEEEEEEEEEEEEE
    .                          EEEEEEEEEEEEEEEEEEEEEEEEDDDDDDDDDDDDDDDDDDDDDDDDDDDDDDDEEEEEEEEEEEEEEEEEEEE
   70                     EEEEEEEEEEEEEEEEEEEEEEEEDDDDDDDDDDDDDDDDDDDDDDDDDDDDDDDDDDDDDDDDDEEEEEEEEEEEEEEE
    .                    EEEEEEEEEEEEEEEEEEEEEEEEDDDDDDDDDDDDDDDDDDDDDDDDDDDDDDDDDDDDDDDDDDDEEEEEEEEEEEEEE
    .               EEEEEEEEEEEEEEEEEEEEEEEEDDDDDDDDDDDDDDDDDDDDDDDDDDDDDDDDDDDDDDDDDDDDDDDDDDDDDEEEEEEEEE
    .              EEEEEEEEEEEEEEEEEEEEEEEEDDDDDDDDDDDDDDDDDDDDDDDDDDDDDDDDDDDDDDDDDDDDDDDDDDDDDDDEEEEEEEE
    .         EEEEEEEEEEEEEEEEEEEEEEEEDDDDDDDDDDDDDDDDDDDDDDDDDDDDDDDDDDDDDDDDDDDDDDDDDDDDDDDDDDDDDDDDDEEE
    +        EEEEEEEEEEEEEEEEEEEEEEEEDDDDDDDDDDDDDDDDDDDDDDDDDDDDDDDDDDDDDDDDDDDDDDDDDDDDDDDDDDDDDDDDDDDEE
    .   EEEEEEEEEEEEEEEEEEEEEEEEDDDDDDDDDDDDDDDDDDDDDDDDDDDDDDDDDDDDCCCCCDDDDDDDDDDDDDDDDDDDDDDDDDDDDDDDD
    .  EEEEEEEEEEEEEEEEEEEEEEEEDDDDDDDDDDDDDDDDDDDDDDDDDDDDDDDDDDDDCCCCCCCDDDDDDDDDDDDDDDDDDDDDDDDDDDDDDDD
    .  EEEEEEEEEEEEEEEEEEEDDDDDDDDDDDDDDDDDDDDDDDDDDDDDDDDDDDDDDDDCCCCCCCCCCCCCCCCCDDDDDDDDDDDDDDDDDDDDDDDDDDD
    .   EEEEEEEEEEEEEEEEEDDDDDDDDDDDDDDDDDDDDDDDDDDDDDDDDDDDDDDDDDCCCCCCCCCCCCCCCCCCCDDDDDDDDDDDDDDDDDDDDDDDDDD
   60   EEEEEEEEEEEEDDDDDDDDDDDDDDDDDDDDDDDDDDDDDDDDDDDDCCCCCCCCCCCCCCCCCCCCCCCCCCCCCDDDDDDDDDDDDDDDDDDDDD
    .  EEEEEEEEEEEEDDDDDDDDDDDDDDDDDDDDDDDDDDDDDDDDDDDDCCCCCCCCCCCCCCCCCCCCCCCCCCCCCCCDDDDDDDDDDDDDDDDDDDD
    .  EEEEEEEEEEEEDDDDDDDDDDDDDDDDDDDDDDDDDDDDDDDCCCCCCCCCCCCCCCCCCCCCCCCCCCCCCCCCCCCCCCCCDDDDDDDDDDDDDDD
    .   EEEEEEEEEEEEDDDDDDDDDDDDDDDDDDDDDDDDDDDDDCCCCCCCCCCCCCCCCCCCCCCCCCCCCCCCCCCCCCCCCCCCDDDDDDDDDDDDDD
    .   EEEEEEEEEEEEDDDDDDDDDDDDDDDDDDDDDDDDCCCCCCCCCCCCCCCCCCCCCCCCCCCCCCCCCCCCCCCCCCCCCCCCCCCCCDDDDDDDDD
    +  EEEEEEEEEEEEDDDDDDDDDDDDDDDDDDDDDDDDCCCCCCCCCCCCCCCCCCCCCCCCCCCCCCCCCCCCCCCCCCCCCCCCCCCCCCCDDDDDDDD
    .  EEEEEEEEEEEEDDDDDDDDDDDDDDDDDDDCCCCCCCCCCCCCCCCCCCCCCCCCCCCCCCCCCCCGGGGGCCCCCCCCCCCCCCCCCCCDDDDDDDD
    .   EEEEEEEEEEEEDDDDDDDDDDDDDDDDDCCCCCCCCCCCCCCCCCCCCCCCCCCCCCCCCCCCCGGGGGGGCCCCCCCCCCCCCCCCCDDDDDDDDD
    .   EEEEEEEEEEEEDDDDDDDDDDDDDDDDDCCCCCCCCCCCCCCCCCCCCCCCCCCCCCCCCCCCCGGGGGGGCCCCCCCCCCCCCCCCCDDDDDDDDD
    .  EEEEEEEEEEEEDDDDDDDDDDDDDDDDDDCCCCCCCCCCCCCCCCCCCCCCCCCCCCCCCCCCCCCGGGGGCCCCCCCCCCCCCCCCCCCDDDDDDDD
   50  EEEEEEEEEEEEDDDDDDDDDDDDDDDDDDDGGGGGCCCCCCCCCCCCCCCCCCCCCCCCCCCCCCCCCCCCCCCCCCCCCCCCCCCCCCCCCCCCDDD
    .   EEEEEEEEEEEEDDDDDDDDDDDDDDDDDGGGGGGGCCCCCCCCCCCCCCCCCCCCCCCCCCCCCCCCCCCCCCCCCCCCCCCCCCCCCCCCCCCCDD
    .   EEEEEEEEEEEEDDDDDDDDDDDDDDDDDGGGGGGGCCCCCCCCCCCCCCCCCCCCCCCCCCCCCCCCCCCCCCCCCCCCCCCCCCCCCCCCCCCCDD
    .  EEEEEEEEEEEEDDDDDDDDDDDDDDDDDDDGGGGGCCCCCCCCCCCCCCCCCCCCCCCCCCCCCCCCCCCCCCCCCCCCCCCCCCCCCCCCCCCCDDD
    .  EEEEEEEEEEEEDDDDDDDDDDDDDDDDDDCCCCCCCCCCCCCCCCCCCCCCCCCCCCCCCCCCCCCCCCCCCCCCCCCCGGGGGCCCCCCCCCCCCCDDD
    +   EEEEEEEEEEEEDDDDDDDDDDDDDDDDDCCCCCCCCCCCCCCCCCCCCCCCCCCCCCCCCCCCCCCCCCCCCCCCGGGGGGGCCCCCCCCCCCCCDD
    .   EEEEEEEEEEEEDDDDDDDDDDDDDDDDDCCCCCCCCCCCCCCCCCCCCCCCCCCCCCCCCCCCCCCCCCCCCCCCGGGGGGGCCCCCCCCCCCCCDD
    .  EEEEEEEEEEEEDDDDDDDDDDDDDDDDDDCCCCCCCCCCCCCCCCCCCCCCCCCCCCCCCCCCCCCCCCCCCCCCCCCCGGGGGCCCCCCCCCCCCCDDD
    .  EEEEEEEEEEEEDDDDDDDDDDDDDDDDDDCCCCCCCCCCCCGGGGGCCCCCCCCCCCCCCCCCCCCCCCCCCCCCCCCCCCCCCCCCCCCCCCCCCCDDD
    .   EEEEEEEEEEEEDDDDDDDDDDDDDDDDDCCCCCCCCCCCGGGGGGGCCCCCCCCCCCCCCCCCCCCCCCCCCCCCCCCCCCCCCCCCCCCCCCCCCDD
   40   EEEEEEEEEEEEDDDDDDDDDDDDDDDDDCCCCCCCCCCCGGGGGGGCCCCCCCCCCCCCCCCCCCCCCCCCCCCCCCCCCCCCCCCCCCCCCCCCCDD
    .  EEEEEEEEEEEEDDDDDDDDDDDDDDDDDDCCCCCCCCCCCCGGGGGCCCCCCCCCCCCCCCCCCCCCCCCCCCCCCCCCCCCCCCCCCCCCCCCCCDDD
    .  EEEEEEEEEEEEDDDDDDDDDDDDDDDDDDCCCCCCCCCCCCCCCCCCCCCCCCCCCCCCCCCCCCCCCCCCCCCCCCCCCCCCCCCCCCCGGGGGDDD
    .   EEEEEEEEEEEEDDDDDDDDDDDDDDDDDCCCCCCCCCCCCCCCCCCCCCCCCCCCCCCCCCCCCCCCCCCCCCCCCCCCCCCCCCCCGGGGGGGDD
```

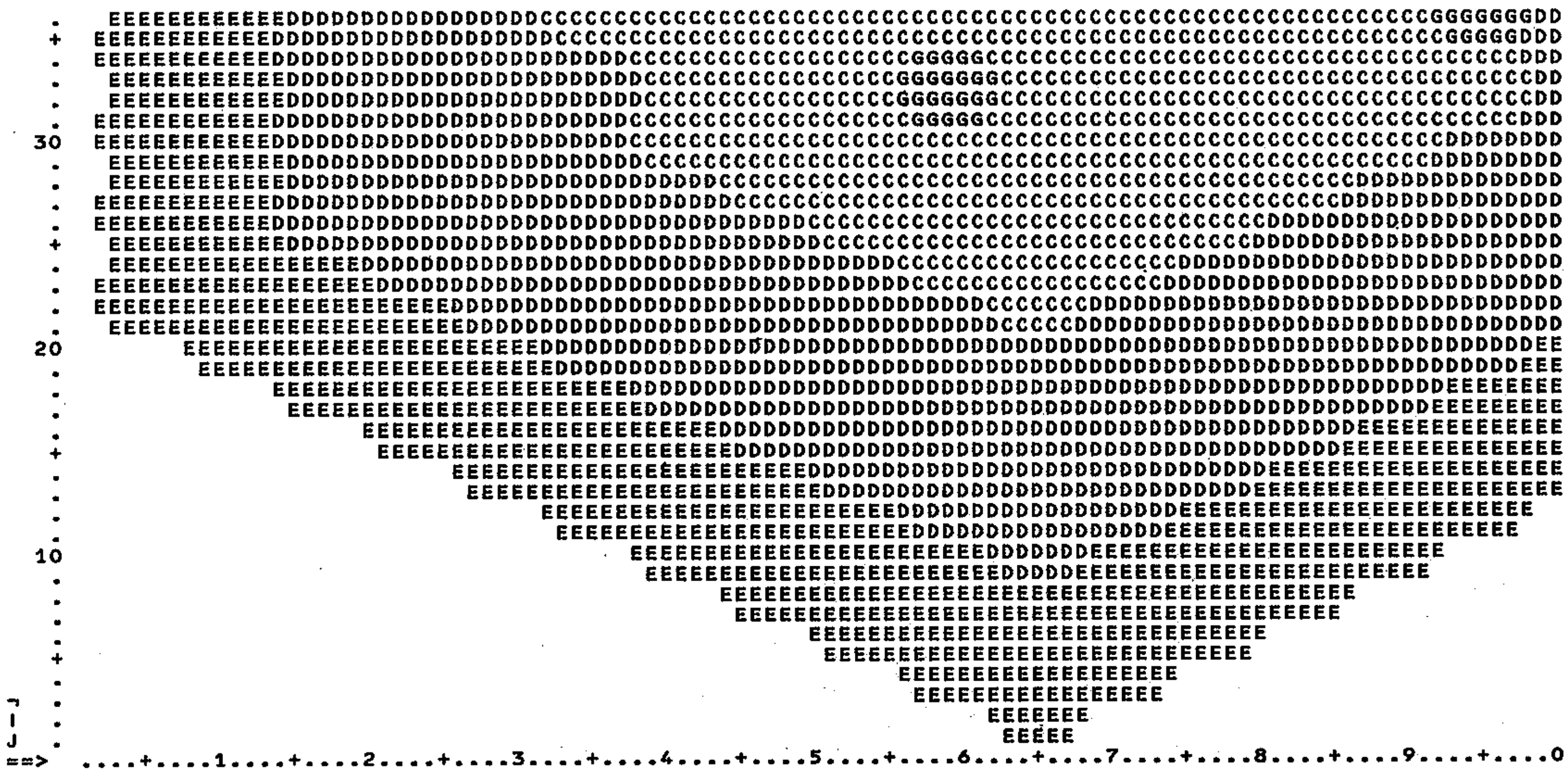
30
20
10
==>
....+....1....+....2....+....3....+....4....+....5....+....6....+....7....+....8....+....9....+....0

```
            *****  REGION ASSIGNMENTS TO MESH INTERVALS  *****  - PAGE 2 -

           ((IREGN(I,J),I=1,MAXI),J=1,MAXJ)
                   REGION NUMBERS ASSIGNED TO MESH INTERVALS
                                        AXIAL POSITION : H(CM)=  95.53 -   98.03
--- REMARKS ---
 :NO REGION
1:KCORE1     2:KCORE2     3:KCOR3I     4:KCOR3O     5:KCORE4     6:KCORE5
7:KTYPEB     8:KTYPEC     9:KCMTYB     A:KINSLT     B:KLSLD      C:KUSLD
D:KRSLDC     E:KNTSLD     F:KCRADP     G:KCRABS     H:KINUSD     I:KLCRDP
 X-DIRECTION RANGE :101 - 129
 ==>  ....+....1....+....2....+....3
    .
    .
    .
    .
   80
    .
    .
    .
    .
    +
    .
    .
    . EEE
    . EEEE
   70 EEEEEEEEE
    . EEEEEEEEEE
    . EEEEEEEEEEEEEEE
    . EEEEEEEEEEEEEEEE
    . EEEEEEEEEEEEEEEEEEEEE
    + EEEEEEEEEEEEEEEEEEEEEEE
    . DDDEEEEEEEEEEEEEEEEEEEEEEEE
    . DDDDEEEEEEEEEEEEEEEEEEEEEEEEE
    . DDDDDDDDDEEEEEEEEEEEEEEEEEEE
    . DDDDDDDDDDEEEEEEEEEEEEEEEEEEE
   60 DDDDDDDDDDDDDDDEEEEEEEEEEEE
    . DDDDDDDDDDDDDDDDEEEEEEEEEEEEE
    . DDDDDDDDDDDDDDDDEEEEEEEEEEEEE
    . DDDDDDDDDDDDDDDEEEEEEEEEEEEE
    . DDDDDDDDDDDDDDDEEEEEEEEEEEEE
    + DDDDDDDDDDDDDDDDEEEEEEEEEEEEE
    . DDDDDDDDDDDDDDDDEEEEEEEEEEEEE
    . DDDDDDDDDDDDDDDDEEEEEEEEEEEEE
    . DDDDDDDDDDDDDDDEEEEEEEEEEEEE
    . DDDDDDDDDDDDDDDDEEEEEEEEEEEEE
   50 DDDDDDDDDDDDDDDDEEEEEEEEEEEEE
    . DDDDDDDDDDDDDDDEEEEEEEEEEEEE
    . DDDDDDDDDDDDDDDDEEEEEEEEEEEEE
    . DDDDDDDDDDDDDDDDEEEEEEEEEEEEE
    . DDDDDDDDDDDDDDDDEEEEEEEEEEEEE
    + DDDDDDDDDDDDDDDEEEEEEEEEEEEE
    . DDDDDDDDDDDDDDDDEEEEEEEEEEEEE
    . DDDDDDDDDDDDDDDDEEEEEEEEEEEEE
    . DDDDDDDDDDDDDDDDEEEEEEEEEEEEE
    . DDDDDDDDDDDDDDDEEEEEEEEEEEEE
   40 DDDDDDDDDDDDDDDDEEEEEEEEEEEEE
    . DDDDDDDDDDDDDDDDEEEEEEEEEEEEE
    . DDDDDDDDDDDDDDDDEEEEEEEEEEEEE
    . DDDDDDDDDDDDDDDDEEEEEEEEEEEEE
```

```
 . DDDDDDDDDDDDDDDDEEEEEEEEEEEE
 + DDDDDDDDDDDDDDDDEEEEEEEEEEEEE
 . DDDDDDDDDDDDDDDDEEEEEEEEEEEEE
 . DDDDDDDDDDDDDDDDEEEEEEEEEEEE
 . DDDDDDDDDDDDDDDDEEEEEEEEEEEE
 . DDDDDDDDDDDDDDDDEEEEEEEEEEEEE
30 DDDDDDDDDDDDDDDDEEEEEEEEEEEEE
 . DDDDDDDDDDDDDDDDEEEEEEEEEEEE
 . DDDDDDDDDDDDDDDDEEEEEEEEEEEE
 . DDDDDDDDDDDDDDDDEEEEEEEEEEEEE
 . DDDDDDDDDDDDDDDDEEEEEEEEEEEEE
 + DDDDDDDDDDDDDDDDEEEEEEEEEEEE
 . DDDDDDDDDDEEEEEEEEEEEEEEEEEE
 . DDDDDDDDDEEEEEEEEEEEEEEEEEEEE
 . DDDDEEEEEEEEEEEEEEEEEEEEEEEEE
 . DDDEEEEEEEEEEEEEEEEEEEEEEEEEE
20 EEEEEEEEEEEEEEEEEEEEEE
 . EEEEEEEEEEEEEEEEEEEEE
 . EEEEEEEEEEEEEEEE
 . EEEEEEEEEEEEEEE
 . EEEEEEEEEE
 + EEEEEEEEE
 . EEEE
 . EEE
 .
 .
10
 .
 .
 .
 .
 +
 .
 .
 .
 .
==>  ....+....1....+....2....+....3
```

```
          *****  REGION ASSIGNMENTS TO MESH INTERVALS  *****  - PAGE 1 -

         ((IREGN(I,J),I=1,MAXI),J=1,MAXJ)
                REGION NUMBERS ASSIGNED TO MESH INTERVALS
                                    AXIAL POSITION : H(CM)=  98.03 -  104.57
--- REMARKS ---
 :NO REGION
1:KCORE1      2:KCORE2      3:KCOR3I      4:KCOR3O      5:KCORE4      6:KCORE5
7:KTYPEB      8:KTYPEC      9:KCMTYB      A:KINSLT      B:KLSLD       C:KUSLD
D:KRSLDC      E:KNTSLD      F:KCRADP      G:KCRABS      H:KINUSD      I:KLCRDP
 X-DIRECTION RANGE :  1 - 100
 ==>  ....+....1....+....2....+....3....+....4....+....5....+....6....+....7....+....8....+....9....+....0
   .                                                                EEEEE
   .                                                               EEEEEEE
   .                                                          EEEEEEEEEEEEEEEEE
   .                                                         EEEEEEEEEEEEEEEEEEE
  80                                                    EEEEEEEEEEEEEEEEEEEEEEEEEEEEE
   .                                                   EEEEEEEEEEEEEEEEEEEEEEEEEEEEEEE
   .                                              EEEEEEEEEEEEEEEEEEEEEEEEEEEEEEEEEEEEEEEEE
   .                                             EEEEEEEEEEEEEEEEEEEEEEEEEEEEEEEEEEEEEEEEEEE
   .                                        EEEEEEEEEEEEEEEEEEEEEEEEEEDDDDEEEEEEEEEEEEEEEEEEEEEEE
   +                                       EEEEEEEEEEEEEEEEEEEEEEEEEEEDDDDDDEEEEEEEEEEEEEEEEEEEEEE
   .                                  EEEEEEEEEEEEEEEEEEEEEEEEDDDDDDDDDDDDDDDDEEEEEEEEEEEEEEEEEEEEEEEEE
   .                                 EEEEEEEEEEEEEEEEEEEEEEEEDDDDDDDDDDDDDDDDDEEEEEEEEEEEEEEEEEEEEEEEEEE
   .                            EEEEEEEEEEEEEEEEEEEEEEEEDDDDDDDDDDDDDDDDDDDDDDDDDDDEEEEEEEEEEEEEEEEEEEEEEE
   .                           EEEEEEEEEEEEEEEEEEEEEEEEDDDDDDDDDDDDDDDDDDDDDDDDDDDDEEEEEEEEEEEEEEEEEEEEEEE
  70                      EEEEEEEEEEEEEEEEEEEEEEEEDDDDDDDDDDDDDDDDDDDDDDDDDDDDDDDDDDDDDDDDDEEEEEEEEEEEEEEE
   .                     EEEEEEEEEEEEEEEEEEEEEEEEDDDDDDDDDDDDDDDDDDDDDDDDDDDDDDDDDDDDDDDDDDDEEEEEEEEEEEEEE
   .                EEEEEEEEEEEEEEEEEEEEEEEEDDDDDDDDDDDDDDDDDDDDDDDDDDDDDDDDDDDDDDDDDDDDDDDDDDEEEEEEEEEEEE
   .               EEEEEEEEEEEEEEEEEEEEEEEEDDDDDDDDDDDDDDDDDDDDDDDDDDDDDDDDDDDDDDDDDDDDDDDDDDDDEEEEEEEEEEE
   .          EEEEEEEEEEEEEEEEEEEEEEEEDDDDDDDDDDDDDDDDDDDDDDDDHHHHDDDDDDDHHHHDDDDDDDDDDDDDDDDDDDDDDDDDDEEE
   +         EEEEEEEEEEEEEEEEEEEEEEEEDDDDDDDDDDDDDDDDDDDDDDDDHHHHHHDDDDHHHHHHDDDDDDDDDDDDDDDDDDDDDDDDDDDEE
   .    EEEEEEEEEEEEEEEEEEEEEEEEDDDDDDDDDDDDDDDDDDDDDDDDHHHHHHHHHHHHCCCCCHHHHHHHHHHHHDDDDDDDDDDDDDDDDDDDDD
   .   EEEEEEEEEEEEEEEEEEEEEEEEDDDDDDDDDDDDDDDDDDDDDDDDHHHHHHHHHHHHCCCCCCHHHHHHHHHHHHDDDDDDDDDDDDDDDDDDDDD
   .   EEEEEEEEEEEEEEEEEEDDDDDDDDDDDDDDDDDDDDDDDDHHHHHHHHHHHHHCCCCCCCCCCCCCCCCHHHHHHHHHHHHHDDDDDDDDDDDDDDD
   .    EEEEEEEEEEEEEEEEDDDDDDDDDDDDDDDDDDDDDDDDHHHHHHHHHHHHHCCCCCCCCCCCCCCCCCCHHHHHHHHHHHHHDDDDDDDDDDDDDD
  60    EEEEEEEEEEEEDDDDDDDDDDDDDDDDDDDDDDDHHHHHHHHHHHHHCCCCCCCCCCCCCCCCCCCCCCCCCCCCCHHHHHHHHHHHHHHDDDDDDD
   .   EEEEEEEEEEEEDDDDDDDDDDDDDDDDDDDDDDDHHHHHHHHHHHHHCCCCCCCCCCCCCCCCCCCCCCCCCCCCCCCHHHHHHHHHHHHHDDDDDDD
   .   EEEEEEEEEEEEDDDDDDDDDDDDDDDDDDHHHHHHHHHHHHHCCCCCCCCCCCCCCCCCCCCCCCCCCCCCCCCCCCCCCCCCHHHHHHHHHHHHDDD
   .    EEEEEEEEEEEEDDDDDDDDDDDDDDDDDHHHHHHHHHHHHHCCCCCCCCCCCCCCCCCCCCCCCCCCCCCCCCCCCCCCCCCCHHHHHHHHHHHHDD
   .    EEEEEEEEEEEEDDDDDDDDDDDDDDDDDHHHHHHHCCCCCCCCCCCCCCCCCCCCCCCCCCCCCCCCCCCCCCCCCCCCCCCCCCCCCHHHHHHHDD
   +   EEEEEEEEEEEEDDDDDDDDDDDDDDDDDDHHHHHCCCCCCCCCCCCCCCCCCCCCCCCCCCCCCCCCCCCCCCCCCCCCCCCCCCCCCCCCCHHHHHDDD
   .   EEEEEEEEEEEEDDDDDDDDDDDDDDDDDDCCCCCCCCCCCCCCCCCCCCCCCCCCCCCCCCCCCCCGGGGGCCCCCCCCCCCCCCCCCCCHHHHHDDD
   .    EEEEEEEEEEEEDDDDDDDDDDDDDDDDDCCCCCCCCCCCCCCCCCCCCCCCCCCCCCCCCCCCCGGGGGGCCCCCCCCCCCCCCCCCCHHHHHHHDD
   .    EEEEEEEEEEEEDDDDDDDDDDDDHHHHHCCCCCCCCCCCCCCCCCCCCCCCCCCCCCCCCCCCCGGGGGGCCCCCCCCCCCCCCCCCCHHHHHHHHH
   .   EEEEEEEEEEEEDDDDDDDDDDDDHHHHHHCCCCCCCCCCCCCCCCCCCCCCCCCCCCCCCCCCCCCGGGGGCCCCCCCCCCCCCCCCCCCHHHHHHHH
  50   EEEEEEEEEEEEDDDDDDDDDDDDHHHHHHGGGGGCCCCCCCCCCCCCCCCCCCCCCCCCCCCCCCCCCCCCCCCCCCCCCCCCCCCCCCCCCCCCCHHH
   .    EEEEEEEEEEEEDDDDDDDDDDDDHHHHHGGGGGGCCCCCCCCCCCCCCCCCCCCCCCCCCCCCCCCCCCCCCCCCCCCCCCCCCCCCCCCCCCCCCHH
   .    EEEEEEEEEEEEDDDDDDDDDDDDHHHHHGGGGGGCCCCCCCCCCCCCCCCCCCCCCCCCCCCCCCCCCCCCCCCCCCCCCCCCCCCCCCCCCCCCCHH
   .   EEEEEEEEEEEEDDDDDDDDDDDDHHHHHHGGGGGCCCCCCCCCCCCCCCCCCCCCCCCCCCCCCCCCCCCCCCCCCCCCCCCCCCCCCCCCCCCCCHHH
   .   EEEEEEEEEEEEDDDDDDDDDDDDHHHHHHCCCCCCCCCCCCCCCCCCCCCCCCCCCCCCCCCCCCCCCCCCCCCCCCCCGGGGGCCCCCCCCCCCCHHH
   +    EEEEEEEEEEEEDDDDDDDDDDDDHHHHHCCCCCCCCCCCCCCCCCCCCCCCCCCCCCCCCCCCCCCCCCCCCCCCCGGGGGGCCCCCCCCCCCCCHH
   .    EEEEEEEEEEEEDDDDDDDDDDDDHHHHHCCCCCCCCCCCCCCCCCCCCCCCCCCCCCCCCCCCCCCCCCCCCCCCCGGGGGGCCCCCCCCCCCCCHH
   .   EEEEEEEEEEEEDDDDDDDDDDDDHHHHHHCCCCCCCCCCCCCCCCCCCCCCCCCCCCCCCCCCCCCCCCCCCCCCCCCGGGGGCCCCCCCCCCCCHHH
   .   EEEEEEEEEEEEDDDDDDDDDDDDHHHHHHCCCCCCCCCCCCCGGGGGCCCCCCCCCCCCCCCCCCCCCCCCCCCCCCCCCCCCCCCCCCCCCCCCHHH
   .    EEEEEEEEEEEEDDDDDDDDDDDDHHHHHCCCCCCCCCCCCCGGGGGGCCCCCCCCCCCCCCCCCCCCCCCCCCCCCCCCCCCCCCCCCCCCCCCCHH
  40    EEEEEEEEEEEEDDDDDDDDDDDDHHHHHCCCCCCCCCCCCCGGGGGGCCCCCCCCCCCCCCCCCCCCCCCCCCCCCCCCCCCCCCCCCCCCCCCCHH
   .   EEEEEEEEEEEEDDDDDDDDDDDDHHHHHHCCCCCCCCCCCCCGGGGGCCCCCCCCCCCCCCCCCCCCCCCCCCCCCCCCCCCCCCCCCCCCCCCCHHH
   .   EEEEEEEEEEEEDDDDDDDDDDDDHHHHHHCCCCCCCCCCCCCCCCCCCCCCCCCCCCCCCCCCCCCCCCCCCCCCCCCCCCCCCCCCCCGGGGGHHH
   .    EEEEEEEEEEEEDDDDDDDDDDDDHHHHHCCCCCCCCCCCCCCCCCCCCCCCCCCCCCCCCCCCCCCCCCCCCCCCCCCCCCCCCCCCCCGGGGGGHH
```

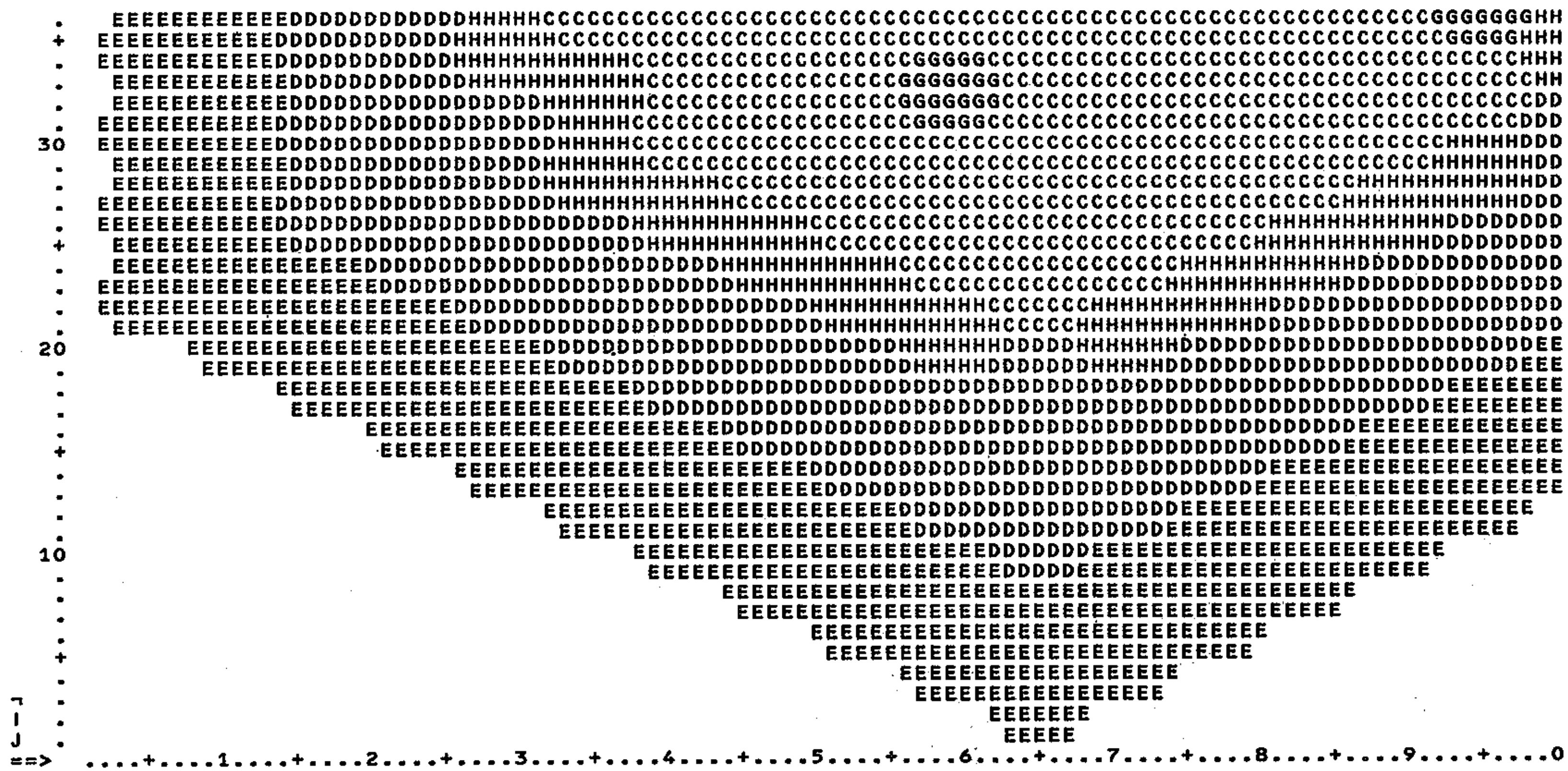
30
20
10
==>
....+....1....+....2....+....3....+....4....+....5....+....6....+....7....+....8....+....9....+....0

```
            *****  REGION ASSIGNMENTS TO MESH INTERVALS  *****  - PAGE 2 -

            ((IREGN(I,J),I=1,MAXI),J=1,MAXJ)
                   REGION NUMBERS ASSIGNED TO MESH INTERVALS
                                     AXIAL POSITION : H(CM)=  98.03 -  104.57
--- REMARKS ---
 :NO REGION
1:KCORE1     2:KCORE2     3:KCOR3I     4:KCOR3O     5:KCORE4     6:KCORE5
7:KTYPEB     8:KTYPEC     9:KCMTYB     A:KINSLT     B:KLSLD      C:KUSLD
D:KRSLDC     E:KNTSLD     F:KCRADP     G:KCRABS     H:KINUSD     I:KLCRDP
 X-DIRECTION RANGE :101 - 129
 ==>  ....+....1....+....2....+....3
    .
    .
    .
    .
   80
    .
    .
    .
    .
    +
    .
    .
    . EEE
    . EEEE
   70 EEEEEEEEE
    . EEEEEEEEEE
    . EEEEEEEEEEEEEEE
    . EEEEEEEEEEEEEEE
    . EEEEEEEEEEEEEEEEEEEEE
    + EEEEEEEEEEEEEEEEEEEEE
    . DDDEEEEEEEEEEEEEEEEEEEEEEEE
    . DDDDEEEEEEEEEEEEEEEEEEEEEEE
    . DDDDDDDDDEEEEEEEEEEEEEEEEEE
    . DDDDDDDDDEEEEEEEEEEEEEEEEE
   60 DDDDDDDDDDDDDDDEEEEEEEEEEEE
    . DDDDDDDDDDDDDDDDEEEEEEEEEEEE
    . DDDDDDDDDDDDDDDDEEEEEEEEEEEE
    . DDDDDDDDDDDDDDDEEEEEEEEEEEE
    . DDDDDDDDDDDDDDDEEEEEEEEEEEE
    + DDDDDDDDDDDDDDDDEEEEEEEEEEEE
    . DDDDDDDDDDDDDDDDEEEEEEEEEEEE
    . DDDDDDDDDDDDDDDDEEEEEEEEEEEE
    . HHHDDDDDDDDDDDDEEEEEEEEEEEE
    . HHHHDDDDDDDDDDDDEEEEEEEEEEEE
   50 HHHHDDDDDDDDDDDDEEEEEEEEEEEE
    . HHHDDDDDDDDDDDDEEEEEEEEEEEE
    . HHHDDDDDDDDDDDDEEEEEEEEEEEE
    . HHHHDDDDDDDDDDDDEEEEEEEEEEEE
    . HHHHDDDDDDDDDDDDEEEEEEEEEEEE
    + HHHDDDDDDDDDDDDEEEEEEEEEEEE
    . HHHDDDDDDDDDDDDEEEEEEEEEEEE
    . HHHHDDDDDDDDDDDDEEEEEEEEEEEE
    . HHHHDDDDDDDDDDDDEEEEEEEEEEEE
    . HHHDDDDDDDDDDDDEEEEEEEEEEEE
   40 HHHDDDDDDDDDDDDEEEEEEEEEEEE
    . HHHHDDDDDDDDDDDDEEEEEEEEEEEE
    . HHHHDDDDDDDDDDDDEEEEEEEEEEEE
    . HHHDDDDDDDDDDDDEEEEEEEEEEEE
```

```
  . HHHDDDDDDDDDDDDEEEEEEEEEEEE
  + HHHHDDDDDDDDDDDDEEEEEEEEEEEE
  . HHHHDDDDDDDDDDDDEEEEEEEEEEEE
  . HHHDDDDDDDDDDDDEEEEEEEEEEEE
  . DDDDDDDDDDDDDDDEEEEEEEEEEEE
  . DDDDDDDDDDDDDDDDEEEEEEEEEEEE
 30 DDDDDDDDDDDDDDDDEEEEEEEEEEEE
  . DDDDDDDDDDDDDDDEEEEEEEEEEEE
  . DDDDDDDDDDDDDDDEEEEEEEEEEEE
  . DDDDDDDDDDDDDDDDEEEEEEEEEEEE
  . DDDDDDDDDDDDDDDDEEEEEEEEEEEE
  + DDDDDDDDDDDDDDDEEEEEEEEEEEE
  . DDDDDDDDDDEEEEEEEEEEEEEEEEE
  . DDDDDDDDDEEEEEEEEEEEEEEEEEEE
  . DDDDEEEEEEEEEEEEEEEEEEEEEEEE
  . DDDEEEEEEEEEEEEEEEEEEEEEEEEE
 20 EEEEEEEEEEEEEEEEEEEEEE
  . EEEEEEEEEEEEEEEEEEEE
  . EEEEEEEEEEEEEEEE
  . EEEEEEEEEEEEEEE
  . EEEEEEEEEEE
  + EEEEEEEEE
  . EEEE
  . EEE
  .
  .
 10
  .
  .
  .
  .
  +
  .
  .
  .
  .
==>  ....+....1....+....2....+....3
```

*** STORAGE ALLOCATION ***

		FCM	ECM
NUMBER OF WORDS IN DATA STORAGE CONTAINER	=	8000000	8000000
MINIMUM NUMBER OF WORDS REQUIRED TO RUN THIS PROBLEM			
WITH 3 PLANES FOR 1 GROUP IN CORE	=	1516	266185
WITH ALL DATA FOR 1 GROUP IN CORE	=	1516	2037871
WITH SCATTERING BAND OF FLUXES IN CORE	=	1516	6090535
WITH ALL FILES IN CORE	=	1516	22551517

LOCATION OF SCRATCH FILES DURING STEADY STATE CALCULATION

FILE CONTENTS	NO. OF RECORDS	RECORD LENGTH	FILE LENGTH	LOCATION	RECORDS IN CORE
NEW FISSION SOURCE	1	238392	238392	CORE	1
OLD FISSION SRC. 1	1	238392	238392	CORE	1
OLD FISSION SRC. 2	0	238392	238392	DISK	1
TOTAL SOURCE	1	238392	238392	CORE	1
COMPOSITION MAP	1	119196	119196	CORE	1
FLUX ITERATE	18	238392	4291056	DISK	1
CROSS SECTIONS	18	702	12636	DISK	1
FINITEDIFF. COEFS.	18	953568	17164224	DISK	1

```
    TOTAL NUMBER OF WORDS USED FOR THIS PROBLEM                          =          1516         6340861

JWE0044I-W 00002139 DCB INFORMATION RECFM OF A DD STATEMENT OR DATA SET IS INVALID. IT IS MODIFIED TO VB (UNIT=45).
 ERROR OCCURS AT DRAD     SSN 00002139     LOC 0101A6C4 OFFSET 00000F8C
 DRAD        AT LOC 01019738 CALLED FROM LOC 01039048 IN IDFDEF   SSN 00005275
 IDFDEF      AT LOC 01038930 CALLED FROM LOC 01065F30 IN SETDIS   SSN 00009463
 SETDIS      AT LOC 010659A8 CALLED FROM LOC 0103A6DC IN INITFD   SSN 00005413
 INITFD      AT LOC 0103A410 CALLED FROM LOC 01066CF8 IN SINITX   SSN 00009548
 SINITX      AT LOC 01066A70 CALLED FROM LOC 0101BE36 IN DRIVER   SSN 00002357
 DRIVER      AT LOC 0101B770 CALLED FROM LOC 0106D720 IN SYSCTL   SSN 00010227
 SYSCTL      AT LOC 0106D0E0 CALLED FROM LOC 010021E4 IN MAIN     SSN 00000013
 MAIN        AT LOC 81002060 CALLED FROM O.S.
TAKEN TO (STANDARD) CORRECTIVE ACTION, EXECUTION CONTINUING.

JWE0044I-W 00002139 DCB INFORMATION RECFM OF A DD STATEMENT OR DATA SET IS INVALID. IT IS MODIFIED TO VB (UNIT=41).
 ERROR OCCURS AT DRAD     SSN 00002139     LOC 0101A6C4 OFFSET 00000F8C
 DRAD        AT LOC 01019738 CALLED FROM LOC 01039048 IN IDFDEF   SSN 00005275
 IDFDEF      AT LOC 01038930 CALLED FROM LOC 01065F98 IN SETDIS   SSN 00009468
 SETDIS      AT LOC 010659A8 CALLED FROM LOC 0103A6DC IN INITFD   SSN 00005413
 INITFD      AT LOC 0103A410 CALLED FROM LOC 01066CF8 IN SINITX   SSN 00009548
 SINITX      AT LOC 01066A70 CALLED FROM LOC 0101BE36 IN DRIVER   SSN 00002357
 DRIVER      AT LOC 0101B770 CALLED FROM LOC 0106D720 IN SYSCTL   SSN 00010227
 SYSCTL      AT LOC 0106D0E0 CALLED FROM LOC 010021E4 IN MAIN     SSN 00000013
 MAIN        AT LOC 81002060 CALLED FROM O.S.
TAKEN TO (STANDARD) CORRECTIVE ACTION, EXECUTION CONTINUING.

JWE0044I-W 00002139 DCB INFORMATION RECFM OF A DD STATEMENT OR DATA SET IS INVALID. IT IS MODIFIED TO VB (UNIT=42).
 ERROR OCCURS AT DRAD     SSN 00002139     LOC 0101A6C4 OFFSET 00000F8C
 DRAD        AT LOC 01019738 CALLED FROM LOC 01039048 IN IDFDEF   SSN 00005275
 IDFDEF      AT LOC 01038930 CALLED FROM LOC 01066070 IN SETDIS   SSN 00009476
 SETDIS      AT LOC 010659A8 CALLED FROM LOC 0103A6DC IN INITFD   SSN 00005413
 INITFD      AT LOC 0103A410 CALLED FROM LOC 01066CF8 IN SINITX   SSN 00009548
 SINITX      AT LOC 01066A70 CALLED FROM LOC 0101BE36 IN DRIVER   SSN 00002357
 DRIVER      AT LOC 0101B770 CALLED FROM LOC 0106D720 IN SYSCTL   SSN 00010227
 SYSCTL      AT LOC 0106D0E0 CALLED FROM LOC 010021E4 IN MAIN     SSN 00000013
 MAIN        AT LOC 81002060 CALLED FROM O.S.
TAKEN TO (STANDARD) CORRECTIVE ACTION, EXECUTION CONTINUING.

JWE0044I-W 00002139 DCB INFORMATION RECFM OF A DD STATEMENT OR DATA SET IS INVALID. IT IS MODIFIED TO VB (UNIT=48).
 ERROR OCCURS AT DRAD     SSN 00002139     LOC 0101A6C4 OFFSET 00000F8C
```

```
 DRAD        AT LOC 01019738 CALLED FROM LOC 01039048 IN IDFDEF   SSN 00005275
 IDFDEF      AT LOC 01038930 CALLED FROM LOC 01066152 IN SETDIS   SSN 00009485
 SETDIS      AT LOC 010659A8 CALLED FROM LOC 0103A6DC IN INITFD   SSN 00005413
 INITFD      AT LOC 0103A410 CALLED FROM LOC 01066CF8 IN SINITX   SSN 00009548
 SINITX      AT LOC 01066A70 CALLED FROM LOC 0101BE36 IN DRIVER   SSN 00002357
 DRIVER      AT LOC 0101B770 CALLED FROM LOC 0106D720 IN SYSCTL   SSN 00010227
 SYSCTL      AT LOC 0106D0E0 CALLED FROM LOC 010021E4 IN MAIN     SSN 00000013
 MAIN        AT LOC 81002060 CALLED FROM O.S.
TAKEN TO (STANDARD) CORRECTIVE ACTION, EXECUTION CONTINUING.

JWE0044I-W 00002139 DCB INFORMATION RECFM OF A DD STATEMENT OR DATA SET IS INVALID. IT IS MODIFIED TO VB (UNIT=49).
 ERROR OCCURS AT DRAD     SSN 00002139     LOC 0101A6C4 OFFSET 00000F8C
 DRAD        AT LOC 01019738 CALLED FROM LOC 01039048 IN IDFDEF   SSN 00005275
 IDFDEF      AT LOC 01038930 CALLED FROM LOC 0106620A IN SETDIS   SSN 00009493
 SETDIS      AT LOC 010659A8 CALLED FROM LOC 0103A6DC IN INITFD   SSN 00005413
 INITFD      AT LOC 0103A410 CALLED FROM LOC 01066CF8 IN SINITX   SSN 00009548
 SINITX      AT LOC 01066A70 CALLED FROM LOC 0101BE36 IN DRIVER   SSN 00002357
 DRIVER      AT LOC 0101B770 CALLED FROM LOC 0106D720 IN SYSCTL   SSN 00010227
 SYSCTL      AT LOC 0106D0E0 CALLED FROM LOC 010021E4 IN MAIN     SSN 00000013
 MAIN        AT LOC 81002060 CALLED FROM O.S.
TAKEN TO (STANDARD) CORRECTIVE ACTION, EXECUTION CONTINUING.


                    ***  USER INPUT SPECIFICATIONS FOR THIS PROBLEM  ***


          0     IPROBT     0/1  EIGENVALUE/FIXED SOURCE PROBLEM
          0     ISOLNT     0/1  REAL/ADJOINT SOLUTION
          0     IXTRAP     0/1  YES/NO CHEBYSHEV OUTER ACCELERATION
          0     IRSTRT     0/1  NO/YES THIS IS A RESTART
          0     IOSAVE     0/1  NO/YES BYPASS LAST CONCURRENT INNER ITERATION PASS IN GROUPS BELOW THE LAST PASS THRESHOLD
          0     IOMEG      0/1 NO/YES ASYMPTOTIC EXTRAPOLATION DURING THE OPTIMUM OVERRELAXATION FACTOR ESTIMATION ITERATIONS


                         STORAGE, ITERATION, TIME LIMITS

    8000000     MAXSIZ     NO. OF WORDS REQUESTED FOR FCM DATA STORAGE CONTAINER
    8000000     MAXBLK     NO. OF WORDS REQUESTED FOR ECM DATA STORAGE CONTAINER
       4500     MINBSZ     MINIMUM DESIRED (PLANE-BLOCK) RECORD LENGTH (IN WORDS) FOR CONCURRENT INNER ITERATION
         30     NOUTMX     MAXIMUM NUMBER OF OUTER ITERATIONS ALLOWED(-1/-2   BYPASS  OUTERS/AND SLOR FACTOR CALCULATION)
 1000000000     LIMTIM     MAXIMUM PROCESSOR TIME (SECONDS) ALLOWED
          0     IBUCK      0/1/2/3/4 NONE/FIRST/SECOND/THIRD/TOTAL DIRECTIONAL B**2 ( GT.0 ) OR DB**2 ( LT.0 ) NG * IAREA
         50     INRMAX     MAXIMUM NUMBER OF ITERATIONS PERMITTED DURING THE OPTIMUM OVERRELAXATION FACTOR ESTIMATION PROCEDURE.


                    EDIT OPTIONS (REGION INTEGRAL EDITS INCLUDE AREA EDITS)

          0     IEDF(1)    0/1/2/3  NONE/PRINT/AUXILIARY/BOTH   PROBLEM DESCRIPTION
          0     IEDF(2)    0/1/2/3  NONE/PRINT/AUXILIARY/BOTH   GEOMETRY REGION MAP
          0     IEDF(3)    0/1/2/3  NONE/PRINT/AUXILIARY/BOTH   GEOMETRY ZONE MAP
         11     IEDF(4)    0/1/2/3  NONE/PRINT/AUXILIARY/BOTH   MACROSCOPIC CROSS SECTIONS (SCATTERING+PRINCIPAL, PRINCIPAL ONLY)
          1     IEDF(5)    0/1/2/3  NONE/PRINT/AUXILIARY/BOTH   BALANCE INTEGRALS BY (GROUP, REGION AND GROUP, REGION)
          0     IEDF(6)    0/1/2/3  NONE/PRINT/AUXILIARY/BOTH   POWER (REGION INTEGRALS, DENSITY BY MESH CELL)
          0     IEDF(7)    0/1/2/3  NONE/PRINT/AUXILIARY/BOTH   FLUX (REGION INTEGRALS, BY MESH CELL, BY MESH CELL AND GROUP)
          1     IEDF(8)    0/1/2/3  NONE/PRINT/AUXILIARY/BOTH   ZONE AVERAGED FLUX
          0     IEDF(9)    0/1/2/3  NONE/PRINT/AUXILIARY/BOTH   REGION AVERAGED FLUX
          0     IEDF(10)   0/1/2/3  NONE/PWDINT/RZFLUX/BOTH     FILES TO BE WRITTEN
```

0	ISRHED	-1/0/N NONE/INPUT-1ST PASS, OUTPUT-LAST SEARCH PASS/REQUESTED EDITS (ABOVE) EVERY N-TH SEARCH PASS

CONVERGENCE CRITERIA

1.000000E-05	EPS1	DESIRED EIGENVALUE CONVERGENCE
1.000000E-04	EPS2	DESIRED POINTWISE FISSION SOURCE CONVERGENCE
1.000000E-04	EPS3	DESIRED AVERAGE FISSION SOURCE CONVERGENCE

OTHER FLOATING POINT DATA

1.000000E+00	EFFK	K-EFFECTIVE OF REACTOR
9.999999E-04	FISMIN	CUT-OFF POINT FOR CONSIDERATION OF A FISSION SOURCE IN CALCULATING FLAMUP AND FLAMLO
4.000000E-02	PSINRM	INNER ITERATION ERROR REDUCTION FACTOR PER OUTER ITERATION
1.400000E+08	POWIN	STEADY STATE REACTOR POWER (WATTS)

*** EDIT OF MACROSCOPIC CROSS SECTION DATASET MXSBIN ***

NO. OF COMPOSITIONS	=	27
NO. OF PRECURSOR FAMILIES	=	0
NO. OF ENERGY GROUPS	=	18
MAXIMUM NO. OF DOWNSCATTER GROUPS	=	17
MAXIMUM NO. OF UPSCATTER GROUPS	=	0
MAXIMUM ENERGY BOUND (EV)	=	1.00000E+00
MINIMUM ENERGY BOUND (EV)	=	1.00000E+00

GROUP NO.	NEUTRON VELOCITY (CM/SEC)	MAXIMUM ENERGY (EV)	MAX DOWNSCATTER	MAX UPSCATTER
1	1.0000000E+00	1.0000000E+00	0	0
2	1.0000000E+00	1.0000000E+00	1	0
3	1.0000000E+00	1.0000000E+00	2	0
4	1.0000000E+00	1.0000000E+00	3	0
5	1.0000000E+00	1.0000000E+00	4	0
6	1.0000000E+00	1.0000000E+00	5	0
7	1.0000000E+00	1.0000000E+00	6	0
8	1.0000000E+00	1.0000000E+00	7	0
9	1.0000000E+00	1.0000000E+00	8	0
10	1.0000000E+00	1.0000000E+00	9	0
11	1.0000000E+00	1.0000000E+00	10	0
12	1.0000000E+00	1.0000000E+00	11	0
13	1.0000000E+00	1.0000000E+00	12	0
14	1.0000000E+00	1.0000000E+00	13	0
15	1.0000000E+00	1.0000000E+00	14	0
16	1.0000000E+00	1.0000000E+00	15	0
17	1.0000000E+00	1.0000000E+00	16	0
18	1.0000000E+00	1.0000000E+00	17	0

********** EDIT OF FISSIONABLE COMPOSITION 1 (CORE1) IN MXSBIN **********

GROUP	ABSORPTION CROSS SECTION	DIRECTIONAL DIFFUSION COEFFICIENTS D1	D2	D3	REMOVAL CROSS SECTION	FISSION CROSS SECTION	FISSION SPECTRUM(CHI)	NEUTRONS PER FISSION	POWER CONVER. FACTOR

1	1.760498E-02	3.618480E+00	3.618480E+00	3.618480E+00	7.240407E-02	1.273730E-02	3.106020E-02	2.900000E+00	4.081286E-13
2	1.066478E-02	3.194715E+00	3.194715E+00	3.194715E+00	6.833582E-02	8.120390E-03	1.191640E-01	2.900000E+00	2.601935E-13
3	8.591624E-03	2.979862E+00	2.979862E+00	2.979862E+00	5.397592E-02	7.823700E-03	2.095280E-01	2.900000E+00	2.506870E-13
4	7.696623E-03	2.549453E+00	2.549453E+00	2.549453E+00	5.385947E-02	6.993570E-03	2.235660E-01	2.900010E+00	2.240880E-13
5	5.602490E-03	1.986113E+00	1.986113E+00	1.986113E+00	5.129779E-02	4.561400E-03	1.742740E-01	2.900010E+00	1.461564E-13
6	4.787110E-03	1.797769E+00	1.797769E+00	1.797769E+00	2.966315E-02	3.604990E-03	1.484680E-01	2.900010E+00	1.155111E-13
7	4.786290E-03	1.471807E+00	1.471807E+00	1.471807E+00	2.570884E-02	3.316910E-03	6.071130E-02	2.900000E+00	1.062804E-13
8	5.651400E-03	1.313080E+00	1.313080E+00	1.313080E+00	2.436616E-02	3.528370E-03	2.199700E-02	2.900010E+00	1.130560E-13
9	7.175470E-03	1.167669E+00	1.167669E+00	1.167669E+00	2.577485E-02	3.890620E-03	7.522740E-03	2.900000E+00	1.246632E-13
10	9.236470E-03	9.689641E-01	9.689641E-01	9.689641E-01	2.769472E-02	4.291000E-03	2.503140E-03	2.900000E+00	1.374922E-13
11	1.192929E-02	7.813171E-01	7.813171E-01	7.813171E-01	3.450510E-02	5.110830E-03	8.221600E-04	2.900000E+00	1.637612E-13
12	1.564401E-02	6.356289E-01	6.356289E-01	6.356289E-01	4.196147E-02	6.442740E-03	2.683880E-04	2.899990E+00	2.064383E-13
13	2.334018E-02	4.237513E-01	4.237513E-01	4.237513E-01	8.065410E-02	9.223180E-03	8.735940E-05	2.900000E+00	2.955291E-13
14	3.325880E-02	7.557996E-01	7.557996E-01	7.557996E-01	4.723820E-02	1.339830E-02	2.755920E-05	2.900000E+00	4.293083E-13
15	4.688380E-02	7.838821E-01	7.838821E-01	7.838821E-01	5.803180E-02	2.005590E-02	0.000000E+00	2.900000E+00	6.426311E-13
16	7.268980E-02	6.033805E-01	6.033805E-01	6.033805E-01	8.555690E-02	3.034230E-02	0.000000E+00	2.900000E+00	9.722280E-13
17	1.041846E-01	6.596428E-01	6.596428E-01	6.596428E-01	1.175209E-01	4.149430E-02	0.000000E+00	2.899990E+00	1.329560E-12
18	1.852539E-01	6.058722E-01	6.058722E-01	6.058722E-01	1.852539E-01	8.247990E-02	0.000000E+00	2.900000E+00	2.642821E-12

SCATTERING CROSS SECTION (TOTAL)

INTO GROUP	FROM GROUP									
2	1	1.220940E-02								
3	1	1.067890E-02	2	1.937060E-02						
4	1	1.085230E-02	2	1.085540E-02	3	2.010130E-02				
5	1	9.161790E-03	2	1.125880E-02	3	7.364990E-03	4	2.567540E-02		
6	1	9.376710E-03	2	1.002420E-02	3	9.518480E-03	4	1.110240E-02	5	3.657210E-02
7	1	4.509050E-03	2	4.177270E-03	3	5.173060E-03	4	5.355210E-03	5	5.577030E-03
	6	2.335580E-02								
8	1	1.614610E-03	2	1.422050E-03	3	2.215060E-03	4	1.794670E-03	5	2.339210E-03
	6	1.018320E-03	7	2.069430E-02						
9	1	4.685130E-04	2	4.196450E-04	3	6.705790E-04	4	5.649150E-04	5	7.688610E-04
	6	3.476770E-04	7	1.685960E-04	8	1.855890E-02				
10	1	1.173730E-04	2	1.183000E-04	3	1.965230E-04	4	8.707170E-04	5	2.519320E-04
	6	1.090890E-04	7	3.397870E-05	8	1.045900E-04	9	1.809680E-02		
11	1	2.713310E-05	2	4.044580E-05	3	8.142720E-05	4	6.182300E-04	5	1.187240E-04
	6	3.328720E-05	7	1.525770E-05	8	3.216140E-05	9	3.480650E-04	10	1.833720E-02
12	1	5.541190E-06	2	9.184480E-06	3	4.626940E-05	4	1.423690E-04	5	5.295020E-05
	6	8.273190E-06	7	7.604860E-06	8	1.440810E-05	9	1.044520E-04	10	1.206260E-04
	11	2.246000E-02								
13	1	0.000000E+00	2	1.343990E-06	3	1.650150E-05	4	3.219410E-05	5	9.533650E-06
	6	2.729840E-06	7	2.116610E-06	8	3.519000E-06	9	3.618850E-05	10	3.679670E-07
	11	8.774790E-05	12	2.629600E-02						
14	1	0.000000E+00	2	0.000000E+00	3	1.052430E-07	4	6.747950E-06	5	4.041240E-06
	6	7.112360E-07	7	5.368240E-07	8	9.157690E-07	9	9.159530E-06	10	4.206470E-08
	11	2.532110E-05	12	6.316820E-06	13	5.731390E-02				
15	1	0.000000E+00	2	0.000000E+00	3	0.000000E+00	4	0.000000E+00	5	9.150800E-07
	6	1.446390E-07	7	1.271690E-07	8	2.096490E-07	9	2.909200E-06	10	9.689150E-09
	11	1.969360E-06	12	1.009760E-05	13	1.414170E-08	14	1.397940E-02		

SCATTERING CROSS SECTION (TOTAL) - CONTINUED

INTO GROUP	FROM GROUP									
16	1	0.000000E+00	2	0.000000E+00	3	0.000000E+00	4	0.000000E+00	5	0.000000E+00
	6	3.262080E-09	7	2.949660E-08	8	4.898330E-08	9	1.432570E-06	10	1.636150E-09
	11	5.597250E-07	12	3.370390E-06	13	2.059510E-09	14	0.000000E+00	15	1.114800E-02
17	1	0.000000E+00	2	0.000000E+00	3	0.000000E+00	4	0.000000E+00	5	0.000000E+00
	6	0.000000E+00	7	1.926490E-09	8	1.083840E-08	9	3.015260E-07	10	7.027400E-12

	11	1.626060E-07	12	1.202530E-06	13	6.114670E-10	14	0.000000E+00	15	0.000000E+00				
	16	1.286710E-02												
18	1	0.000000E+00	2	0.000000E+00	3	0.000000E+00	4	0.000000E+00	5	0.000000E+00				
	6	0.000000E+00	7	0.000000E+00	8	7.443540E-10	9	7.464830E-08	10	1.390780E-12				
	11	5.020230E-08	12	4.726020E-07	13	1.814870E-10	14	0.000000E+00	15	0.000000E+00				
	16	0.000000E+00	17	1.333630E-02										

********** EDIT OF FISSIONABLE COMPOSITION 2 (CORE2) IN MXSBIN **********

GROUP	ABSORPTION CROSS SECTION	DIRECTIONAL DIFFUSION COEFFICIENTS D1	D2	D3	REMOVAL CROSS SECTION	FISSION CROSS SECTION	FISSION SPECTRUM(CHI)	NEUTRONS PER FISSION	POWER CONVER. FACTOR
1	1.752382E-02	3.615819E+00	3.615819E+00	3.615819E+00	7.241994E-02	1.265640E-02	3.106020E-02	2.900010E+00	4.055364E-13
2	1.061073E-02	3.192665E+00	3.192665E+00	3.192665E+00	6.836020E-02	8.066000E-03	1.191640E-01	2.900000E+00	2.584508E-13
3	8.537885E-03	2.977280E+00	2.977280E+00	2.977280E+00	5.394709E-02	7.769360E-03	2.095280E-01	2.900010E+00	2.489458E-13
4	7.644441E-03	2.547602E+00	2.547602E+00	2.547602E+00	5.380202E-02	6.942710E-03	2.235660E-01	2.900010E+00	2.224583E-13
5	5.557610E-03	1.984517E+00	1.984517E+00	1.984517E+00	5.125124E-02	4.517940E-03	1.742740E-01	2.899990E+00	1.447638E-13
6	4.746950E-03	1.797381E+00	1.797381E+00	1.797381E+00	2.947973E-02	3.565280E-03	1.484680E-01	2.900000E+00	1.142387E-13
7	4.742930E-03	1.471138E+00	1.471138E+00	1.471138E+00	2.563064E-02	3.274600E-03	6.071130E-02	2.900000E+00	1.049247E-13
8	5.602250E-03	1.312537E+00	1.312537E+00	1.312537E+00	2.429489E-02	3.481740E-03	2.199700E-02	2.899990E+00	1.115619E-13
9	7.120960E-03	1.167358E+00	1.167358E+00	1.167358E+00	2.566959E-02	3.838580E-03	7.522740E-03	2.900000E+00	1.229958E-13
10	9.176400E-03	9.688064E-01	9.688064E-01	9.688064E-01	2.763565E-02	4.232410E-03	2.503140E-03	2.900000E+00	1.356149E-13
11	1.185222E-02	7.805853E-01	7.805853E-01	7.805853E-01	3.415114E-02	5.036880E-03	8.221600E-04	2.899990E+00	1.613917E-13
12	1.555008E-02	6.352776E-01	6.352776E-01	6.352776E-01	4.176233E-02	6.349970E-03	2.683880E-04	2.900000E+00	2.034657E-13
13	2.319453E-02	4.231601E-01	4.231601E-01	4.231601E-01	7.999085E-02	9.090130E-03	8.735940E-05	2.900000E+00	2.912659E-13
14	3.309530E-02	7.541308E-01	7.541308E-01	7.541308E-01	4.717880E-02	1.321400E-02	2.755920E-05	2.900000E+00	4.234030E-13
15	4.658820E-02	7.832246E-01	7.832246E-01	7.832246E-01	5.756830E-02	1.973790E-02	0.000000E+00	2.899990E+00	6.324418E-13
16	7.200780E-02	6.011140E-01	6.011140E-01	6.011140E-01	8.440910E-02	2.977370E-02	0.000000E+00	2.900000E+00	9.540089E-13
17	1.037557E-01	6.581983E-01	6.581983E-01	6.581983E-01	1.170854E-01	4.096140E-02	0.000000E+00	2.900000E+00	1.312485E-12
18	1.840242E-01	6.061940E-01	6.061940E-01	6.061940E-01	1.840242E-01	8.103620E-02	0.000000E+00	2.900000E+00	2.596562E-12

SCATTERING CROSS SECTION (TOTAL)

INTO GROUP	FROM GROUP									
2	1	1.221900E-02								
3	1	1.069440E-02	2	1.938980E-02						
4	1	1.087760E-02	2	1.087860E-02	3	2.009520E-02				
5	1	9.182410E-03	2	1.127750E-02	3	7.384160E-03	4	2.567180E-02		
6	1	9.386280E-03	2	1.003770E-02	3	9.527920E-03	4	1.110770E-02	5	3.656540E-02
7	1	4.507200E-03	2	4.180720E-03	3	5.174600E-03	4	5.355760E-03	5	5.582990E-03
	6	2.320730E-02								
8	1	1.612590E-03	2	1.422700E-03	3	2.215440E-03	4	1.794280E-03	5	2.339200E-03
	6	1.021650E-03	7	2.066010E-02						
9	1	4.677150E-04	2	4.196470E-04	3	6.707730E-04	4	5.648790E-04	5	7.683610E-04
	6	3.493160E-04	7	1.683070E-04	8	1.853770E-02				
10	1	1.170330E-04	2	1.180410E-04	3	1.965130E-04	4	8.673540E-04	5	2.516890E-04
	6	1.093580E-04	7	3.385550E-05	8	1.040480E-04	9	1.804680E-02		
11	1	2.702360E-05	2	4.012530E-05	3	8.148640E-05	4	6.153380E-04	5	1.186200E-04
	6	3.332240E-05	7	1.515170E-05	8	3.197340E-05	9	3.483010E-04	10	1.833820E-02
12	1	5.518370E-06	2	9.108940E-06	3	4.643120E-05	4	1.417130E-04	5	5.290280E-05
	6	8.263880E-06	7	7.525250E-06	8	1.425680E-05	9	1.040060E-04	10	1.205920E-04
	11	2.218400E-02								
13	1	0.000000E+00	2	1.335030E-06	3	1.657770E-05	4	3.204670E-05	5	9.521670E-06
	6	2.716840E-06	7	2.088010E-06	8	3.488650E-06	9	3.582600E-05	10	3.952390E-07
	11	8.713670E-05	12	2.619080E-02						
14	1	0.000000E+00	2	0.000000E+00	3	1.045610E-07	4	6.714580E-06	5	4.032760E-06
	6	7.064910E-07	7	5.295190E-07	8	9.064800E-07	9	9.055740E-06	10	5.008490E-08
	11	2.502600E-05	12	6.331100E-06	13	5.679630E-02				
15	1	0.000000E+00	2	0.000000E+00	3	0.000000E+00	4	0.000000E+00	5	9.134100E-07

6	1.433270E-07	7	1.254710E-07	8	2.073810E-07	9	2.867190E-06	10	1.153720E-08
11	1.986810E-06	12	1.007800E-05	13	1.692910E-08	14	1.408350E-02		

SCATTERING CROSS SECTION (TOTAL) - CONTINUED

INTO GROUP	FROM GROUP									
16	1	0.000000E+00	2	0.000000E+00	3	0.000000E+00	4	0.000000E+00	5	0.000000E+00
	6	3.181040E-09	7	2.910830E-08	8	4.846230E-08	9	1.406270E-06	10	1.950290E-09
	11	5.621570E-07	12	3.364320E-06	13	2.507320E-09	14	0.000000E+00	15	1.098010E-02
17	1	0.000000E+00	2	0.000000E+00	3	0.000000E+00	4	0.000000E+00	5	0.000000E+00
	6	0.000000E+00	7	1.924030E-09	8	1.072470E-08	9	2.957210E-07	10	8.954300E-12
	11	1.629040E-07	12	1.200600E-06	13	7.444200E-10	14	0.000000E+00	15	0.000000E+00
	16	1.240130E-02								
18	1	0.000000E+00	2	0.000000E+00	3	0.000000E+00	4	0.000000E+00	5	0.000000E+00
	6	0.000000E+00	7	0.000000E+00	8	7.347550E-10	9	7.315080E-08	10	1.772130E-12
	11	5.028200E-08	12	4.716730E-07	13	2.209490E-10	14	0.000000E+00	15	0.000000E+00
	16	0.000000E+00	17	1.332970E-02						

********** EDIT OF FISSIONABLE COMPOSITION 3 (CRIN3) IN MXSBIN **********

GROUP	ABSORPTION CROSS SECTION	DIRECTIONAL DIFFUSION COEFFICIENTS D1	D2	D3	REMOVAL CROSS SECTION	FISSION CROSS SECTION	FISSION SPECTRUM(CHI)	NEUTRONS PER FISSION	POWER CONVER. FACTOR
1	1.755042E-02	3.616678E+00	3.616678E+00	3.616678E+00	7.241409E-02	1.268270E-02	3.106020E-02	2.900010E+00	4.063791E-13
2	1.062776E-02	3.193215E+00	3.193215E+00	3.193215E+00	6.835860E-02	8.083370E-03	1.191640E-01	2.900000E+00	2.590073E-13
3	8.555075E-03	2.978132E+00	2.978132E+00	2.978132E+00	5.395785E-02	7.786770E-03	2.095280E-01	2.900000E+00	2.495037E-13
4	7.661256E-03	2.548225E+00	2.548225E+00	2.548225E+00	5.381750E-02	6.959110E-03	2.235660E-01	2.900000E+00	2.229838E-13
5	5.572190E-03	1.985155E+00	1.985155E+00	1.985155E+00	5.123334E-02	4.532160E-03	1.742740E-01	2.900010E+00	1.452195E-13
6	4.758050E-03	1.795406E+00	1.795406E+00	1.795406E+00	2.979308E-02	3.575980E-03	1.484680E-01	2.899990E+00	1.145816E-13
7	4.756120E-03	1.471521E+00	1.471521E+00	1.471521E+00	2.559758E-02	3.287670E-03	6.071130E-02	2.900000E+00	1.053435E-13
8	5.616900E-03	1.312899E+00	1.312899E+00	1.312899E+00	2.423206E-02	3.496030E-03	2.199700E-02	2.900000E+00	1.120198E-13
9	7.138400E-03	1.167510E+00	1.167510E+00	1.167510E+00	2.575137E-02	3.854740E-03	7.522740E-03	2.899990E+00	1.235136E-13
10	9.196920E-03	9.688514E-01	9.688514E-01	9.688514E-01	2.771739E-02	4.251070E-03	2.503140E-03	2.900000E+00	1.362128E-13
11	1.187815E-02	7.807937E-01	7.807937E-01	7.807937E-01	3.427305E-02	5.060180E-03	8.221600E-04	2.900000E+00	1.621383E-13
12	1.559064E-02	6.355671E-01	6.355671E-01	6.355671E-01	4.203841E-02	6.382420E-03	2.683880E-04	2.900000E+00	2.045055E-13
13	2.324769E-02	4.245900E-01	4.245900E-01	4.245900E-01	8.097351E-02	9.132490E-03	8.735940E-05	2.900000E+00	2.926232E-13
14	3.308650E-02	7.544124E-01	7.544124E-01	7.544124E-01	4.689730E-02	1.325680E-02	2.755920E-05	2.900000E+00	4.247744E-13
15	4.674240E-02	7.832503E-01	7.832503E-01	7.832503E-01	5.792820E-02	1.987880E-02	0.000000E+00	2.900000E+00	6.369565E-13
16	7.265850E-02	6.009135E-01	6.009135E-01	6.009135E-01	8.559440E-02	3.010820E-02	0.000000E+00	2.900000E+00	9.647269E-13
17	1.044848E-01	6.578099E-01	6.578099E-01	6.578099E-01	1.186834E-01	4.118510E-02	0.000000E+00	2.900010E+00	1.319653E-12
18	1.880744E-01	6.036395E-01	6.036395E-01	6.036395E-01	1.880744E-01	8.185640E-02	0.000000E+00	2.899990E+00	2.622843E-12

SCATTERING CROSS SECTION (TOTAL)

INTO GROUP	FROM GROUP									
2	1	1.221480E-02								
3	1	1.068920E-02	2	1.939000E-02						
4	1	1.086980E-02	2	1.087000E-02	3	2.009910E-02				
5	1	9.176100E-03	2	1.127130E-02	3	7.378120E-03	4	2.567030E-02		
6	1	9.383380E-03	2	1.003400E-02	3	9.524690E-03	4	1.110540E-02	5	3.653310E-02
7	1	4.507690E-03	2	4.180130E-03	3	5.173930E-03	4	5.355980E-03	5	5.583660E-03
	6	2.351640E-02								
8	1	1.613140E-03	2	1.422760E-03	3	2.215250E-03	4	1.794510E-03	5	2.338650E-03
	6	1.017160E-03	7	2.061390E-02						
9	1	4.679280E-04	2	4.197260E-04	3	6.706870E-04	4	5.649230E-04	5	7.682150E-04
	6	3.473410E-04	7	1.681460E-04	8	1.846000E-02				
10	1	1.171290E-04	2	1.181360E-04	3	1.965120E-04	4	8.682890E-04	5	2.516540E-04
	6	1.090220E-04	7	3.387140E-05	8	1.041640E-04	9	1.811240E-02		

(以下、断面積プリント略)

********** EDIT OF NON-FISSIONABLE COMPOSITION 27 (UCRDP) IN MXSBIN **********

GROUP	ABSORPTION CROSS SECTION	DIRECTIONAL DIFFUSION COEFFICIENTS D1	D2	D3	REMOVAL CROSS SECTION	POWER CONVERSION FACTOR
1	3.256300E-03	6.072486E+00	6.072486E+00	6.072486E+00	4.487091E-02	0.000000E+00
2	1.079030E-03	5.424950E+00	5.424950E+00	5.424950E+00	4.161655E-02	0.000000E+00
3	3.289370E-04	4.872269E+00	4.872269E+00	4.872269E+00	3.299260E-02	0.000000E+00
4	1.169570E-04	4.534808E+00	4.534808E+00	4.534808E+00	2.816079E-02	0.000000E+00
5	9.564340E-05	3.863682E+00	3.863682E+00	3.863682E+00	2.781891E-02	0.000000E+00
6	1.164510E-04	3.188572E+00	3.188572E+00	3.188572E+00	1.578175E-02	0.000000E+00
7	1.310280E-04	3.117362E+00	3.117362E+00	3.117362E+00	1.131803E-02	0.000000E+00
8	1.903680E-04	2.640933E+00	2.640933E+00	2.640933E+00	1.097884E-02	0.000000E+00
9	2.117170E-04	2.303856E+00	2.303856E+00	2.303856E+00	1.186857E-02	0.000000E+00
10	3.901260E-04	1.892778E+00	1.892778E+00	1.892778E+00	1.286616E-02	0.000000E+00
11	5.066760E-04	1.385529E+00	1.385529E+00	1.385529E+00	1.800798E-02	0.000000E+00
12	6.447720E-04	8.715303E-01	8.715303E-01	8.715303E-01	2.772297E-02	0.000000E+00
13	1.284720E-03	4.452881E-01	4.452881E-01	4.452881E-01	8.952092E-02	0.000000E+00
14	2.364970E-03	1.321110E+00	1.321110E+00	1.321110E+00	1.306227E-02	0.000000E+00
15	7.538800E-04	1.521639E+00	1.521639E+00	1.521639E+00	9.688320E-03	0.000000E+00
16	2.806150E-03	1.182331E+00	1.182331E+00	1.182331E+00	1.340085E-02	0.000000E+00
17	1.423870E-03	1.391992E+00	1.391992E+00	1.391992E+00	9.546420E-03	0.000000E+00
18	2.888480E-03	1.358681E+00	1.358681E+00	1.358681E+00	2.888480E-03	0.000000E+00

SCATTERING CROSS SECTION (TOTAL)

INTO GROUP	FROM GROUP									
2	1	7.552470E-03								
3	1	1.118220E-02	2	1.327020E-02						
4	1	1.021490E-02	2	9.481300E-03	3	2.292830E-02				
5	1	6.451170E-03	2	8.577690E-03	3	3.658440E-03	4	2.016720E-02		
6	1	4.454840E-03	2	5.522320E-03	3	2.700600E-03	4	6.371220E-03	5	2.344400E-02
7	1	1.336560E-03	2	2.436940E-03	3	1.694280E-03	4	7.187590E-04	5	2.637730E-03
	6	1.439390E-02								
8	1	3.439280E-04	2	8.891590E-04	3	1.062450E-03	4	4.119170E-04	5	1.094360E-03
	6	1.016640E-03	7	1.114510E-02						
9	1	8.213360E-05	2	2.675000E-04	3	3.713430E-04	4	2.113360E-04	5	3.072440E-04
	6	1.866330E-04	7	3.643440E-05	8	1.076720E-02				
10	1	1.892170E-05	2	7.047710E-05	3	1.323100E-04	4	1.144150E-04	5	9.349800E-05
	6	4.904080E-05	7	8.709130E-07	8	1.455960E-05	9	1.165540E-02		
11	1	3.918370E-06	2	1.756810E-05	3	6.799130E-05	4	3.629210E-05	5	8.761590E-05
	6	1.427270E-05	7	2.638790E-06	8	4.204560E-06	9	1.039880E-06	10	1.235300E-02
12	1	4.197140E-07	2	3.763650E-06	3	3.650750E-05	4	1.020110E-05	5	4.950520E-05
	6	3.510480E-06	7	1.499000E-06	8	1.396870E-06	9	3.193630E-07	10	1.227980E-04
	11	1.745950E-02								
13	1	0.000000E+00	2	6.052350E-07	3	1.139240E-05	4	2.460450E-06	5	6.880100E-06
	6	9.737610E-07	7	3.462920E-07	8	7.608650E-07	9	7.354060E-08	10	2.346610E-07
	11	3.224490E-05	12	2.707820E-02						
14	1	0.000000E+00	2	0.000000E+00	3	4.823690E-08	4	3.406990E-08	5	1.861020E-06
	6	2.685520E-07	7	8.233680E-08	8	2.651990E-07	9	1.679090E-08	10	0.000000E+00
	11	7.281770E-06	12	0.000000E+00	13	8.823620E-02				
15	1	0.000000E+00	2	0.000000E+00	3	0.000000E+00	4	0.000000E+00	5	5.767130E-07
	6	6.210830E-08	7	2.047720E-08	8	6.230820E-08	9	3.875940E-09	10	0.000000E+00
	11	1.631220E-06	12	0.000000E+00	13	0.000000E+00	14	1.069730E-02		

SCATTERING CROSS SECTION (TOTAL) - CONTINUED

INTO GROUP FROM GROUP

16	1	0.000000E+00	2	0.000000E+00	3	0.000000E+00	4	0.000000E+00	5	0.000000E+00
	6	0.000000E+00	7	5.410230E-09	8	1.540220E-08	9	8.940590E-10	10	0.000000E+00
	11	4.681890E-07	12	0.000000E+00	13	0.000000E+00	14	0.000000E+00	15	8.934440E-03
17	1	0.000000E+00	2	0.000000E+00	3	0.000000E+00	4	0.000000E+00	5	0.000000E+00
	6	0.000000E+00	7	0.000000E+00	8	3.598390E-09	9	2.233860E-10	10	0.000000E+00
	11	1.384490E-07	12	0.000000E+00	13	0.000000E+00	14	0.000000E+00	15	0.000000E+00
	16	1.059470E-02								
18	1	0.000000E+00	2	0.000000E+00	3	0.000000E+00	4	0.000000E+00	5	0.000000E+00
	6	0.000000E+00	7	0.000000E+00	8	4.470230E-10	9	0.000000E+00	10	0.000000E+00
	11	4.295990E-08	12	0.000000E+00	13	0.000000E+00	14	0.000000E+00	15	0.000000E+00
	16	0.000000E+00	17	8.122550E-03						

```
(ORPCAL) OPTIMUM OVERRELAXATION FACTOR CALCULATION FOR GROUP    1 WAS TERMINATED AT THE MAXIMUM ITERATION THRESHOLD
(ORPCAL) OPTIMUM OVERRELAXATION FACTOR CALCULATION FOR GROUP    2 WAS TERMINATED AT THE MAXIMUM ITERATION THRESHOLD
(ORPCAL) OPTIMUM OVERRELAXATION FACTOR CALCULATION FOR GROUP    3 WAS TERMINATED AT THE MAXIMUM ITERATION THRESHOLD
(ORPCAL) OPTIMUM OVERRELAXATION FACTOR CALCULATION FOR GROUP    4 WAS TERMINATED AT THE MAXIMUM ITERATION THRESHOLD
(ORPCAL) OPTIMUM OVERRELAXATION FACTOR CALCULATION FOR GROUP    5 WAS TERMINATED AT THE MAXIMUM ITERATION THRESHOLD
(ORPCAL) OPTIMUM OVERRELAXATION FACTOR CALCULATION FOR GROUP    6 WAS TERMINATED AT THE MAXIMUM ITERATION THRESHOLD
(ORPCAL) OPTIMUM OVERRELAXATION FACTOR CALCULATION FOR GROUP    7 WAS TERMINATED AT THE MAXIMUM ITERATION THRESHOLD
(ORPCAL) OPTIMUM OVERRELAXATION FACTOR CALCULATION FOR GROUP    8 WAS TERMINATED AT THE MAXIMUM ITERATION THRESHOLD
(ORPCAL) OPTIMUM OVERRELAXATION FACTOR CALCULATION FOR GROUP    9 WAS TERMINATED AT THE MAXIMUM ITERATION THRESHOLD
(ORPCAL) OPTIMUM OVERRELAXATION FACTOR CALCULATION FOR GROUP   10 WAS TERMINATED AT THE MAXIMUM ITERATION THRESHOLD
(ORPCAL) OPTIMUM OVERRELAXATION FACTOR CALCULATION FOR GROUP   11 WAS TERMINATED AT THE MAXIMUM ITERATION THRESHOLD
(ORPCAL) OPTIMUM OVERRELAXATION FACTOR CALCULATION FOR GROUP   12 WAS TERMINATED AT THE MAXIMUM ITERATION THRESHOLD
(ORPCAL) OPTIMUM OVERRELAXATION FACTOR CALCULATION FOR GROUP   14 WAS TERMINATED AT THE MAXIMUM ITERATION THRESHOLD
(ORPCAL) OPTIMUM OVERRELAXATION FACTOR CALCULATION FOR GROUP   15 WAS TERMINATED AT THE MAXIMUM ITERATION THRESHOLD
(ORPCAL) OPTIMUM OVERRELAXATION FACTOR CALCULATION FOR GROUP   16 WAS TERMINATED AT THE MAXIMUM ITERATION THRESHOLD
(ORPCAL) OPTIMUM OVERRELAXATION FACTOR CALCULATION FOR GROUP   17 WAS TERMINATED AT THE MAXIMUM ITERATION THRESHOLD
(ORPCAL) OPTIMUM OVERRELAXATION FACTOR CALCULATION FOR GROUP   18 WAS TERMINATED AT THE MAXIMUM ITERATION THRESHOLD
```

OUTER ITERATION SUMMARY REAL SOLUTION K-EFF. PROBLEM

OPTIMIZED INNER ITERATION STRATEGY

GROUP NO.	OPTIMUM OMEGA	NO. OF INNERS	GROUP NO.	OPTIMUM OMEGA	NO. OF INNERS	GROUP NO.	OPTIMUM OMEGA	NO. OF INNERS	GROUP NO.	OPTIMUM OMEGA	NO. OF INNERS
1	1.62526E+00	13	2	1.62150E+00	13	3	1.64423E+00	14	4	1.64346E+00	13
5	1.65632E+00	14	6	1.70839E+00	17	7	1.70197E+00	17	8	1.68707E+00	16
9	1.66481E+00	14	10	1.61936E+00	12	11	1.54814E+00	10	12	1.46635E+00	8
13	1.26985E+00	5	14	1.55875E+00	10	15	1.58474E+00	11	16	1.54344E+00	10
17	1.57219E+00	11	18	1.62054E+00	13						

OUTER IT. NO.	REL. POINT ERROR	REL. SUM ERROR	EIGENVALUE CHANGE	POLY. ORDER	DOM. RATIO USED	DOM. RATIO ESTIMATED	K-EFFECTIVE
1	4.045328E-01	1.780467E-01	-6.000375E-02	0	0.000000E+00	0.000000E+00	9.39996246E-01
2	1.816273E-01	8.822792E-02	4.838843E-02	0	0.000000E+00	4.982383E-01	9.88384673E-01
3	5.205114E-02	2.429127E-02	8.138087E-03	0	0.000000E+00	2.882023E-01	9.96522760E-01
4	2.241904E-02	9.103070E-03	2.090253E-03	0	0.000000E+00	3.787034E-01	9.98613012E-01
5	1.163071E-02	4.635634E-03	6.355283E-04	0	0.000000E+00	5.106969E-01	9.99248541E-01
6	6.849771E-03	2.946084E-03	2.023785E-04	1	5.106969E-01	5.106969E-01	9.99450919E-01
7	3.772401E-03	1.737698E-03	1.000788E-04	2	5.106969E-01	6.947319E-01	9.99550998E-01
8	2.121582E-03	1.009668E-03	7.022767E-06	3	5.106969E-01	7.152858E-01	9.99558021E-01

9	1.360595E-03	6.274714E-04	-3.642049E-05	1	7.152858E-01	7.152858E-01	9.99521600E-01
10	7.367397E-04	3.618495E-04	-2.394700E-05	2	7.152858E-01	7.280599E-01	9.99497653E-01
11	2.337586E-04	1.257239E-04	-9.165962E-06	3	7.152858E-01	7.234445E-01	9.99488487E-01
12	1.686026E-04	5.641929E-05	-1.794264E-05	1	7.234445E-01	7.234445E-01	9.99470545E-01
13	8.459617E-05	3.392617E-05	-9.404775E-06	2	7.234445E-01	7.455250E-01	9.99461140E-01

OUTER ITERATIONS COMPLETED AT ITERATION 13, ITERATIONS HAVE CONVERGED

K-EFFECTIVE = 0.99946113981

TO RESTART THIS CALCULATION, INPUT FOLLOWING VALUES

DOMINANCE RATIO (SIGBAR) = 7.455249828788E-01

OPTIMIZED OVER-RELAXATION FACTORS

GROUP NO.	OPTIMUM OMEGA	GROUP NO.	OPTIMUM OMEGA	GROUP NO.	OPTIMUM OMEGA	GROUP NO.	OPTIMUM OMEGA	GROUP NO.	OPTIMUM OMEGA
1	1.62526E+00	2	1.62150E+00	3	1.64423E+00	4	1.64346E+00	5	1.65632E+00
6	1.70839E+00	7	1.70197E+00	8	1.68707E+00	9	1.66481E+00	10	1.61936E+00
11	1.54814E+00	12	1.46635E+00	13	1.26985E+00	14	1.55875E+00	15	1.58474E+00
16	1.54344E+00	17	1.57219E+00	18	1.62054E+00				

```
* * * * * * * * * * * * * * * * * * * * * * *
*                                           *
*                ERROR COUNT                *
*                                           *
*                ERROR            NO. OF    *
*   SUBROUTINE    NO.     TYPE    ERRORS    *
*     ORPCAL      100   NONFATAL    17      *
*                                           *
* * * * * * * * * * * * * * * * * * * * * * *
```

MAXIMUM POWER DENSITY 8.75444E+02 OCCURS AT MESH CELL (I,J,K) = (55, 36, 11)

PEAK POWER DENSITY IS CALCULATED BY SAMPLING THE AVERAGE FLUX IN EACH MESH CELL.

REGION AND AREA BALANCE INTEGRALS FOR REAL K-EFF PROBLEM WITH ENERGY RANGE (EV) =(1.000E+00,1.000E+00)

REGION NO.	REGION NAME	ZONE NO.	ZONE NAME	NET LEAKAGE +	ABSORPTION RATE(1) +	SCATTER OUT(2) -	SCATTER IN -	FISSION PRODUCTION(3) -	EXTERNAL SOURCE =	BALANCE
1	KCORE1	1	CORE1	2.57966E+17	3.22135E+17	1.14428E+18	1.14504E+18	5.79330E+17	0.00000E+00	7.33548E+12
2	KCORE2	2	CORE2	9.71557E+17	1.21399E+18	4.36853E+18	4.37152E+18	2.18253E+18	0.00000E+00	2.10466E+13
3	KCOR3I	3	CRIN3	3.03950E+17	3.75667E+17	1.36082E+18	1.36178E+18	6.78656E+17	0.00000E+00	4.33888E+12
4	KCOR3O	4	CROT3	6.85962E+17	7.86521E+17	2.64855E+18	2.65040E+18	1.47063E+18	0.00000E+00	5.56588E+12
5	KCORE4	5	CORE4	1.78149E+18	2.07303E+18	6.90807E+18	6.91289E+18	3.84971E+18	0.00000E+00	6.64671E+11
6	KCORE5	6	CORE5	1.51434E+18	1.91122E+18	5.90636E+18	5.91005E+18	3.42187E+18	0.00000E+00	-1.52598E+13
7	KTYPEB	7	TYPEB	2.74649E+16	8.54408E+16	5.40594E+17	5.40730E+17	1.12766E+17	0.00000E+00	4.02630E+12
8	KTYPEC	8	TYPEC	9.29783E+16	2.13891E+17	9.85625E+17	9.85995E+17	3.06493E+17	0.00000E+00	5.79415E+12
9	KCMTYB	9	CMTYB	4.12003E+15	2.21239E+16	2.05970E+17	2.06004E+17	2.62101E+16	0.00000E+00	2.07093E+11
10	KINSLT	10	INSLT	-5.17545E+16	1.01655E+17	7.48889E+17	7.49284E+17	4.95047E+16	0.00000E+00	1.19630E+12
11	KLSLD	11	LSLD	-1.20404E+17	1.20443E+17	2.50308E+18	2.50309E+18	0.00000E+00	0.00000E+00	2.87914E+13
12	KUSLD	12	USLD	-1.81849E+17	1.81869E+17	3.02335E+18	3.02336E+18	0.00000E+00	0.00000E+00	9.46864E+12
13	KRSLDC	13	RSLDC	-1.43428E+18	1.43436E+18	1.51818E+19	1.51819E+19	0.00000E+00	0.00000E+00	-1.73178E+13

14	KNTSLD	14	NTSLD	-1.65120E+18	1.65119E+18	3.66253E+18	3.66253E+18	0.00000E+00	0.00000E+00	-7.92413E+12
15	KCRADP	15	CRADP	-2.79802E+16	2.79937E+16	1.18770E+18	1.18771E+18	0.00000E+00	0.00000E+00	5.43668E+12
16	KCRABS	16	CRABS	-2.68839E+17	2.68840E+17	1.92708E+17	1.92708E+17	0.00000E+00	0.00000E+00	4.16258E+11
17	KINUSD	21	INUSD	-3.69173E+15	3.69178E+15	4.46232E+16	4.46233E+16	0.00000E+00	0.00000E+00	8.09554E+09
18	KLCRDP	26	LCRDP	-2.04461E+15	2.05010E+15	1.51496E+17	1.51496E+17	0.00000E+00	0.00000E+00	5.32597E+12
	TOTALS			1.89778E+18	1.07961E+19	5.07650E+19	5.07811E+19	1.26777E+19	0.00000E+00	5.91206E+13

(1) ABSORPTION = CAPTURE + FISSION
(2) SCATTER OUT = TOTAL OUTSCATTER - (N,2N) SOURCE (N,2N) SOURCE = SCATTER IN - SCATTER OUT
(3) FISSION PRODUCTION = FISSION SOURCE / K-EFF

REGION NO.	NAME	ZONE NO.	ZONE NAME	LEAKAGE PLANAR	LEAKAGE Y	LEAKAGE Z	BUCKLING(4) TOTAL	BUCKLING(4) PLANAR	BUCKLING(4) Y	BUCKLING(4) Z
1	KCORE1	1	CORE1	1.50450E+17	4.70292E+16	1.07516E+17	3.79025E-03	2.21054E-03	6.90993E-04	1.57972E-03
2	KCORE2	2	CORE2	5.54689E+17	1.69580E+17	4.16868E+17	3.73261E-03	2.13105E-03	6.51506E-04	1.60156E-03
3	KCOR3I	3	CRIN3	1.72709E+17	6.38055E+16	1.31240E+17	3.75603E-03	2.13424E-03	7.88469E-04	1.62179E-03
4	KCOR3O	4	CROT3	4.28869E+17	1.29938E+17	2.57093E+17	4.39167E-03	2.74571E-03	8.31892E-04	1.64596E-03
5	KCORE4	5	CORE4	1.11092E+18	3.49908E+17	6.70574E+17	4.37096E-03	2.72568E-03	8.58514E-04	1.64528E-03
6	KCORE5	6	CORE5	9.77240E+17	3.71590E+17	5.37095E+17	4.43623E-03	2.86282E-03	1.08857E-03	1.57342E-03
7	KTYPEB	7	TYPEB	-4.75399E+16	-1.70411E+16	7.50047E+16	5.03461E-04	-8.71460E-04	-3.12383E-04	1.37492E-03
8	KTYPEC	8	TYPEC	-1.83602E+16	-9.90803E+15	1.11338E+17	1.22153E-03	-2.41213E-04	-1.30170E-04	1.46275E-03
9	KCMTYB	9	CMTYB	-3.50420E+16	-1.26018E+16	3.91620E+16	1.33223E-04	-1.13310E-03	-4.07484E-04	1.26632E-03
10	KINSLT	10	INSLT	6.53729E+16	2.08796E+16	-1.17127E+17	-1.21622E-03	1.53625E-03	4.90668E-04	-2.75248E-03
11	KLSLD	11	LSLD	2.87798E+17	9.01760E+16	-4.08202E+17	-4.90608E-04	1.17268E-03	3.67439E-04	-1.66329E-03
12	KUSLD	12	USLD	5.57657E+17	1.87911E+17	-7.39506E+17	-6.62724E-04	2.03231E-03	6.84816E-04	-2.69504E-03
13	KRSLDC	13	RSLDC	-1.88575E+18	-6.07622E+17	4.51477E+17	-1.94474E-03	-2.55690E-03	-8.23877E-04	6.12160E-04
14	KNTSLD	14	NTSLD	-1.68649E+18	-5.71024E+17	3.52864E+16	-3.18739E-02	-3.25551E-02	-1.10227E-02	6.81150E-04
15	KCRADP	15	CRADP	-2.59457E+17	-8.84141E+16	2.31476E+17	-1.51637E-04	-1.40611E-03	-4.79154E-04	1.25447E-03
16	KCRABS	16	CRABS	-1.91699E+17	-6.42145E+16	-7.71398E+16	-3.20958E-02	-2.28863E-02	-7.66634E-03	-9.20945E-03
17	KINUSD	21	INUSD	-2.70031E+15	-1.05468E+15	-9.91422E+14	-1.05603E-03	-7.72432E-04	-3.01694E-04	-2.83599E-04
18	KLCRDP	26	LCRDP	6.16787E+16	2.30492E+16	-6.37233E+16	-5.45970E-05	1.64700E-03	6.15479E-04	-1.70159E-03
	TOTALS			2.40342E+17	8.19866E+16	1.65744E+18	6.19883E-04	7.85041E-05	2.67797E-05	5.41379E-04

(4) BUCKLING = B**2 = LEAKAGE / (D*FLUX*VOLUME) 1/CM**2

REGION AND AREA BALANCE INTEGRALS FOR REAL K-EFF PROBLEM WITH ENERGY RANGE (EV) =(1.000E+00,1.000E+00)

REGION NO.	NAME	ZONE NO.	ZONE NAME	CAPTURE RATE	FISSION RATE	(N2,N) SOURCE	NET PRODUCTION(5)	MEDIAN ENERGY FISSION SRC.	MEDIAN ENERGY ABSORPTN RATE	MEDIAN ENERGY FLUX
1	KCORE1	1	CORE1	1.22474E+17	1.99661E+17	7.64021E+14	5.80094E+17	1.00000E+00	1.00000E+00	1.00000E+00
2	KCORE2	2	CORE2	4.61794E+17	7.52191E+17	2.99168E+15	2.18552E+18	1.00000E+00	1.00000E+00	1.00000E+00
3	KCOR3I	3	CRIN3	1.41774E+17	2.33893E+17	9.56253E+14	6.79613E+17	1.00000E+00	1.00000E+00	1.00000E+00
4	KCOR3O	4	CROT3	2.79682E+17	5.06840E+17	1.85129E+15	1.47248E+18	1.00000E+00	1.00000E+00	1.00000E+00
5	KCORE4	5	CORE4	7.46263E+17	1.32677E+18	4.81448E+15	3.85453E+18	1.00000E+00	1.00000E+00	1.00000E+00
6	KCORE5	6	CORE5	7.31898E+17	1.17932E+18	3.69413E+15	3.42557E+18	1.00000E+00	1.00000E+00	1.00000E+00
7	KTYPEB	7	TYPEB	4.65770E+16	3.88638E+16	1.35996E+14	1.12902E+17	1.00000E+00	1.00000E+00	1.00000E+00
8	KTYPEC	8	TYPEC	1.08261E+17	1.05630E+17	3.70587E+14	3.06864E+17	1.00000E+00	1.00000E+00	1.00000E+00
9	KCMTYB	9	CMTYB	1.30908E+16	9.03309E+15	3.36269E+13	2.62437E+16	1.00000E+00	1.00000E+00	1.00000E+00
10	KINSLT	10	INSLT	8.45939E+16	1.70614E+16	3.94834E+14	4.98996E+16	1.00000E+00	1.00000E+00	1.00000E+00
11	KLSLD	11	LSLD	1.20443E+17	0.00000E+00	9.72355E+12	9.72355E+12	0.00000E+00	1.00000E+00	1.00000E+00
12	KUSLD	12	USLD	1.81869E+17	0.00000E+00	1.11756E+13	1.11756E+13	0.00000E+00	1.00000E+00	1.00000E+00
13	KRSLDC	13	RSLDC	1.43436E+18	0.00000E+00	9.82991E+13	9.82991E+13	0.00000E+00	1.00000E+00	1.00000E+00
14	KNTSLD	14	NTSLD	1.65119E+18	0.00000E+00	1.61398E+11	1.61398E+11	0.00000E+00	1.00000E+00	1.00000E+00
15	KCRADP	15	CRADP	2.79937E+16	0.00000E+00	8.03143E+12	8.03143E+12	0.00000E+00	1.00000E+00	1.00000E+00
16	KCRABS	16	CRABS	2.68840E+17	0.00000E+00	1.13285E+11	1.13285E+11	0.00000E+00	1.00000E+00	1.00000E+00

17	KINUSD	21	INUSD	3.69178E+15	0.00000E+00	3.90522E+10	3.90522E+10	0.00000E+00	1.00000E+00	1.00000E+00
18	KLCRDP	26	LCRDP	2.05010E+15	0.00000E+00	1.57896E+11	1.57896E+11	0.00000E+00	1.00000E+00	1.00000E+00
	TOTALS			6.42685E+18	4.36927E+18	1.61346E+16	1.26938E+19	1.00000E+00	1.00000E+00	1.00000E+00

(5) NET PRODUCTION = FISSION PRODUCTION + (N,2N) SOURCE

REAL ZONE FLUX AVERAGES FOR K-EFF PROBLEM WITH ENERGY RANGE (EV) =(1.000E+00,1.000E+00)

ZONE NO.	ZONE NAME	VOLUME (CC)	AVG. TOTAL FLUX (NEUTRON/CM2-SEC)	GROUP 1	GROUP 2	GROUP 3	GROUP 4
1	CORE1	8.84009E+03	4.93557E+15	1.99411E+13	8.50804E+13	2.10285E+14	2.96584E+14
2	CORE2	3.53604E+04	4.69875E+15	1.96262E+13	8.37430E+13	2.05821E+14	2.88222E+14
3	CRIN3	1.17868E+04	4.36389E+15	1.87856E+13	8.01660E+13	1.95799E+14	2.72362E+14
4	CROT3	2.35736E+04	4.22683E+15	1.85678E+13	7.92835E+13	1.92854E+14	2.67850E+14
5	CORE4	7.07208E+04	3.68531E+15	1.61366E+13	6.88934E+13	1.67038E+14	2.31995E+14
6	CORE5	7.66142E+04	2.91713E+15	1.14229E+13	4.86967E+13	1.19426E+14	1.69679E+14
7	TYPEB	5.89340E+03	4.66604E+15	1.78222E+13	7.60663E+13	1.91469E+14	2.75801E+14
8	TYPEC	8.84009E+03	4.90337E+15	1.89861E+13	8.10025E+13	2.02687E+14	2.89584E+14
9	CMTYB	2.94670E+03	4.31686E+15	1.72481E+13	7.36345E+13	1.83723E+14	2.62270E+14
10	INSLT	1.16410E+04	2.47175E+15	7.21515E+12	3.06638E+13	7.96165E+13	1.18449E+14
11	LSLD	1.03808E+05	1.30848E+15	1.90976E+12	8.16930E+12	2.44635E+13	4.50702E+13
12	USLD	1.44848E+05	1.16294E+15	1.24376E+12	5.34609E+12	1.66415E+13	3.26051E+13
13	RSLDC	7.66435E+05	8.45845E+14	7.59768E+11	3.23673E+12	1.00314E+13	2.03760E+13
14	NTSLD	6.93440E+05	7.79168E+13	1.22741E+10	5.37938E+10	2.43999E+11	8.29533E+11
15	CRADP	2.01836E+04	3.58099E+15	1.28268E+13	5.48169E+13	1.38995E+14	2.04292E+14
16	CRABS	8.38880E+03	6.62099E+14	6.98835E+11	3.00675E+12	9.78108E+12	2.13797E+13
17	ENTNO	0.00000E+00	0.00000E+00	0.00000E+00	0.00000E+00	0.00000E+00	0.00000E+00
18	GASPL	0.00000E+00	0.00000E+00	0.00000E+00	0.00000E+00	0.00000E+00	0.00000E+00
19	HLHED	0.00000E+00	0.00000E+00	0.00000E+00	0.00000E+00	0.00000E+00	0.00000E+00
20	INLSD	0.00000E+00	0.00000E+00	0.00000E+00	0.00000E+00	0.00000E+00	0.00000E+00
21	INUSD	1.21640E+04	1.99821E+14	2.84503E+10	1.22038E+11	5.86911E+11	2.04208E+12
22	NLSLD	0.00000E+00	0.00000E+00	0.00000E+00	0.00000E+00	0.00000E+00	0.00000E+00
23	NGSPL	0.00000E+00	0.00000E+00	0.00000E+00	0.00000E+00	0.00000E+00	0.00000E+00
24	NHLHD	0.00000E+00	0.00000E+00	0.00000E+00	0.00000E+00	0.00000E+00	0.00000E+00
25	MTRIX	0.00000E+00	0.00000E+00	0.00000E+00	0.00000E+00	0.00000E+00	0.00000E+00
26	LCRDP	7.92441E+03	1.38765E+15	2.39589E+12	1.02419E+13	2.95290E+13	5.21532E+13
27	UCRDP	0.00000E+00	0.00000E+00	0.00000E+00	0.00000E+00	0.00000E+00	0.00000E+00
	TOTALS	2.01341E+06	1.02074E+15	2.58604E+12	1.10376E+13	2.84484E+13	4.39136E+13

REAL ZONE FLUX AVERAGES FOR K-EFF PROBLEM WITH ENERGY RANGE (EV) =(1.000E+00,1.000E+00)

ZONE NO.	ZONE NAME	GROUP 5	GROUP 6	GROUP 7	GROUP 8	GROUP 9	GROUP 10
1	CORE1	3.57440E+14	8.17849E+14	9.10144E+14	8.25952E+14	5.86800E+14	3.78686E+14
2	CORE2	3.45458E+14	7.82946E+14	8.65564E+14	7.79692E+14	5.52138E+14	3.57004E+14
3	CRIN3	3.25628E+14	7.29062E+14	8.04897E+14	7.18492E+14	5.07746E+14	3.28505E+14
4	CROT3	3.18877E+14	7.08163E+14	7.77274E+14	6.92032E+14	4.89022E+14	3.16290E+14
5	CORE4	2.76973E+14	6.14591E+14	6.74527E+14	5.99648E+14	4.28994E+14	2.78012E+14
6	CORE5	2.07507E+14	4.73415E+14	5.24552E+14	4.72886E+14	3.52116E+14	2.27470E+14
7	TYPEB	3.35712E+14	7.74470E+14	8.56809E+14	7.82876E+14	5.56160E+14	3.58433E+14
8	TYPEC	3.50638E+14	8.11565E+14	9.02719E+14	8.25621E+14	5.86875E+14	3.78422E+14
9	CMTYB	3.17531E+14	7.21840E+14	7.90595E+14	7.14883E+14	5.06755E+14	3.27177E+14
10	INSLT	1.47840E+14	3.76057E+14	4.29784E+14	4.09379E+14	3.12287E+14	2.10004E+14
11	LSLD	6.44809E+13	1.82679E+14	2.20822E+14	2.17573E+14	1.69773E+14	1.14916E+14
12	USLD	5.22376E+13	1.61936E+14	1.96942E+14	1.98657E+14	1.59456E+14	1.02730E+14

13	RSLDC	3.66427E+13	1.14427E+14	1.38055E+14	1.41685E+14	1.20574E+14	7.11559E+13
14	NTSLD	2.40357E+12	8.50152E+12	1.44892E+13	1.53788E+13	1.44934E+13	1.01219E+13
15	CRADP	2.49568E+14	5.86694E+14	6.42868E+14	5.94839E+14	4.29934E+14	2.82173E+14
16	CRABS	3.58365E+13	1.09711E+14	1.40470E+14	1.34337E+14	1.01748E+14	5.60722E+13
17	ENTNO	0.00000E+00	0.00000E+00	0.00000E+00	0.00000E+00	0.00000E+00	0.00000E+00
18	GASPL	0.00000E+00	0.00000E+00	0.00000E+00	0.00000E+00	0.00000E+00	0.00000E+00
19	HLHED	0.00000E+00	0.00000E+00	0.00000E+00	0.00000E+00	0.00000E+00	0.00000E+00
20	INLSD	0.00000E+00	0.00000E+00	0.00000E+00	0.00000E+00	0.00000E+00	0.00000E+00
21	INUSD	5.61241E+12	2.45331E+13	3.41242E+13	3.61275E+13	3.09527E+13	1.78312E+13
22	NLSLD	0.00000E+00	0.00000E+00	0.00000E+00	0.00000E+00	0.00000E+00	0.00000E+00
23	NGSPL	0.00000E+00	0.00000E+00	0.00000E+00	0.00000E+00	0.00000E+00	0.00000E+00
24	NHLHD	0.00000E+00	0.00000E+00	0.00000E+00	0.00000E+00	0.00000E+00	0.00000E+00
25	MTRIX	0.00000E+00	0.00000E+00	0.00000E+00	0.00000E+00	0.00000E+00	0.00000E+00
26	LCRDP	7.09601E+13	1.96349E+14	2.36063E+14	2.32202E+14	1.78783E+14	1.22903E+14
27	UCRDP	0.00000E+00	0.00000E+00	0.00000E+00	0.00000E+00	0.00000E+00	0.00000E+00
	TOTALS	5.95660E+13	1.53378E+14	1.78038E+14	1.70410E+14	1.32930E+14	8.39252E+13

REAL ZONE FLUX AVERAGES FOR K-EFF PROBLEM WITH ENERGY RANGE (EV) =(1.000E+00,1.000E+00)

ZONE NO.	ZONE NAME	GROUP 11	GROUP 12	GROUP 13	GROUP 14	GROUP 15	GROUP 16
1	CORE1	2.10066E+14	1.16356E+14	3.92074E+13	5.81299E+13	1.83269E+13	3.49071E+12
2	CORE2	1.98160E+14	1.09007E+14	3.65756E+13	5.37445E+13	1.67451E+13	3.16690E+12
3	CRIN3	1.82014E+14	9.97300E+13	3.34507E+13	4.83722E+13	1.49890E+13	2.84945E+12
4	CROT3	1.74860E+14	9.54064E+13	3.18495E+13	4.63336E+13	1.44683E+13	2.72195E+12
5	CORE4	1.52753E+14	8.50255E+13	2.89059E+13	4.29847E+13	1.45869E+13	3.01804E+12
6	CORE5	1.24332E+14	7.70614E+13	2.99989E+13	4.84252E+13	2.03381E+13	5.92902E+12
7	TYPEB	2.00174E+14	1.12556E+14	3.95587E+13	6.23889E+13	1.98845E+13	4.16991E+12
8	TYPEC	2.10733E+14	1.16917E+14	3.93997E+13	6.28296E+13	1.99206E+13	3.98230E+12
9	CMTYB	1.83964E+14	1.02092E+14	3.59763E+13	5.59564E+13	1.77418E+13	3.78652E+12
10	INSLT	1.21664E+14	7.63921E+13	3.08134E+13	6.30051E+13	3.22032E+13	1.26969E+13
11	LSLD	6.75856E+13	4.48541E+13	1.90610E+13	5.32156E+13	3.39557E+13	1.70013E+13
12	USLD	5.84178E+13	4.01016E+13	2.04457E+13	4.79362E+13	3.02052E+13	1.48360E+13
13	RSLDC	3.96552E+13	3.29036E+13	2.15419E+13	3.80215E+13	2.53742E+13	1.32309E+13
14	NTSLD	5.66133E+12	3.02009E+12	1.11612E+12	9.32282E+11	4.26285E+11	1.35760E+11
15	CRADP	1.56565E+14	9.12281E+13	3.14901E+13	6.67856E+13	2.45128E+13	7.46279E+12
16	CRABS	2.37853E+13	1.07324E+13	3.10346E+12	6.82679E+12	3.07570E+12	8.26740E+11
17	ENTNO	0.00000E+00	0.00000E+00	0.00000E+00	0.00000E+00	0.00000E+00	0.00000E+00
18	GASPL	0.00000E+00	0.00000E+00	0.00000E+00	0.00000E+00	0.00000E+00	0.00000E+00
19	HLHED	0.00000E+00	0.00000E+00	0.00000E+00	0.00000E+00	0.00000E+00	0.00000E+00
20	INLSD	0.00000E+00	0.00000E+00	0.00000E+00	0.00000E+00	0.00000E+00	0.00000E+00
21	INUSD	9.54106E+12	7.14863E+12	3.70993E+12	9.99820E+12	7.18544E+12	3.83854E+12
22	NLSLD	0.00000E+00	0.00000E+00	0.00000E+00	0.00000E+00	0.00000E+00	0.00000E+00
23	NGSPL	0.00000E+00	0.00000E+00	0.00000E+00	0.00000E+00	0.00000E+00	0.00000E+00
24	NHLHD	0.00000E+00	0.00000E+00	0.00000E+00	0.00000E+00	0.00000E+00	0.00000E+00
25	MTRIX	0.00000E+00	0.00000E+00	0.00000E+00	0.00000E+00	0.00000E+00	0.00000E+00
26	LCRDP	7.12588E+13	4.51397E+13	1.48204E+13	5.66207E+13	3.27267E+13	1.55498E+13
27	UCRDP	0.00000E+00	0.00000E+00	0.00000E+00	0.00000E+00	0.00000E+00	0.00000E+00
	TOTALS	4.68349E+13	3.14220E+13	1.55073E+13	2.82500E+13	1.64362E+13	7.74959E+12

REAL ZONE FLUX AVERAGES FOR K-EFF PROBLEM WITH ENERGY RANGE (EV) =(1.000E+00,1.000E+00)

ZONE NO.	ZONE NAME	GROUP 17	GROUP 18
1	CORE1	9.01107E+11	3.28856E+11

2	CORE2	8.20768E+11	3.09815E+11
3	CRIN3	7.53128E+11	2.88200E+11
4	CROT3	7.13088E+11	2.66687E+11
5	CORE4	8.88524E+11	3.38383E+11
6	CORE5	2.58885E+12	1.28432E+12
7	TYPEB	1.18262E+12	5.06605E+11
8	TYPEC	1.06640E+12	4.27887E+11
9	CMTYB	1.13642E+12	5.51100E+11
10	INSLT	7.55165E+12	6.12893E+12
11	LSLD	1.18606E+13	1.10906E+13
12	USLD	1.14408E+13	1.17673E+13
13	RSLDC	9.41163E+12	8.76279E+12
14	NTSLD	6.23967E+10	3.45022E+10
15	CRADP	3.51833E+12	2.41639E+12
16	CRABS	4.51615E+11	2.56170E+11
17	ENTNO	0.00000E+00	0.00000E+00
18	GASPL	0.00000E+00	0.00000E+00
19	HLHED	0.00000E+00	0.00000E+00
20	INLSD	0.00000E+00	0.00000E+00
21	INUSD	3.04177E+12	3.39708E+12
22	NLSLD	0.00000E+00	0.00000E+00
23	NGSPL	0.00000E+00	0.00000E+00
24	NHLHD	0.00000E+00	0.00000E+00
25	MTRIX	0.00000E+00	0.00000E+00
26	LCRDP	1.04228E+13	9.52885E+12
27	UCRDP	0.00000E+00	0.00000E+00
	TOTALS	5.34962E+12	4.96132E+12

```
************************************  J O B   I N F O R M A T I O N  ************************************
*                                                                                                      *
*        JOB NAME                    : POF1P13G                    JOB   CLASS          : D            *
*                                                                                                      *
*        JOB NO.                     : J6414                       GROUP NAME           : POF1P##      *
*                                                                                                      *
*        PROGRAMER NAME              : VSFORT                                                         *
*                                                                                                      *
*    < INPUT-OUTPUT INFORMATION >                                                                      *
*                                                                                                      *
*        READER NAME                 : FIBRDR                      ON READER            :              *
*                                                                                                      *
*        READ   CARDS                :   93 (S)                    MESSAGE CLASS        : X            *
*                                                                                                      *
*    < EXECUTION    INFORMATION >                                                                      *
*                                                                                                      *
*        PAGING COUNT                :            0                COMPLETION CODE      :  0004        *
*                                                                                                      *
*        EXCP   COUNT                :    3,046,727                EXECUTION SYSTEM     : BEP1         *
*                                                                                                      *
*        USED MAX     REGION         :          468 (KB)           JOB   START          :              *
*                                                                                                      *
*        USED MAX    EREGION         :       63,704 (KB)           JOB   END            :              *
*                                                                                                      *
*        USED MAX VP  REGION         :            0 (KB)           ELAPS TIME           : 12:50:19.00  *
*                                                                                                      *
*        USED MAX VP EREGION         :            0 (KB)           CPU   TIME           :     0H 19M  0.0S *
*                                                                                                      *
*        TOTAL USED MAX VP REGION    :            0 (KB)           VU    TIME           : 00:00:00.00  *
*                                                                                                      *
*    < RESOURCE     INFORMATION >                                                                      *
*                                                                                                      *
*        USED DASD SPACE                                           BUDGET(CPU TIME)                   *
*                                                                                                      *
*         USER                       :       40,373 (KB)           USER                 :   100H  0M  0.0S *
*                                                                                                      *
*                                                                  PROJECT              :   100H  0M  0.0S *
*                                                                                                      *
*                                                                  TOTAL USED CPU TIME                *
*                                                                                                      *
*                                                                  USER                 :     2H  3M 15.7S *
*                                                                                                      *
*                                                                  PROJECT              :     6H 34M 56.3S *
*                                                                                                      *
*    < JYOUHOU   CENTER   NEWS >                                                                       *
*                                                                                                      *
*                                                                                                      *
*                                                                                                      
```

**** ISOTOPE NAME : TOTAL = 27 *****

	1	2	3	4	5	6	7	8	9	10
1	CORE1	CORE2	CRIN3	CROT3	CORE4	CORE5	TYPEB	TYPEC	CMTYB	INSLT
11	LSLD	USLD	RSLDC	NTSLD	CRADP	CRABS	ENTNO	GASPL	HLHED	INLSD
21	INUSD	NLSLD	NGSPL	NHLHD	MTRIX	LCRDP	UCRDP			

**** REGION NAME : TOTAL = 18 *****

	1	2	3	4	5	6	7	8	9	10
1	KCORE1	KCORE2	KCOR3I	KCOR3O	KCORE4	KCORE5	KTYPEB	KTYPEC	KCMTYB	KINSLT
11	KLSLD	KUSLD	KRSLDC	KNTSLD	KCRADP	KCRABS	KINUSD	KUCRDP		

**** ISOTOPE NUMBER ASSIGNED TO REGION : TOTAL = 18 *****

	1	2	3	4	5	6	7	8	9	10	11	12	13	14	15	16	17	18	19	20
1	1	2	3	4	5	6	7	8	9	10	11	12	13	14	15	16	21	27		

**** SUBASSEBLY NAME : TOTAL = 13 *****

	1	2	3	4	5	6	7	8	9	10
1	SKND1	SKND2	SKND3	SKND4	SKND5	SKND6	SKND7	SKND8	SKND9	SKND10
11	SKND11	SKND12	SKND13							

**** REGION NUMBER ASSIGNED TO SUBASSEBLY : TOTAL = 117 *****

SNAME(1) = SKND1 - >

	1	2	3	4	5	6	7	8	9	10	11	12	13	14	15	16	17	18	19	20
1	11	11	10	7	10	12	12	12	12											

SNAME(2) = SKND2 - >

	1	2	3	4	5	6	7	8	9	10	11	12	13	14	15	16	17	18	19	20
1	11	11	10	8	10	12	12	12	12											

SNAME(3) = SKND3 - >

	1	2	3	4	5	6	7	8	9	10	11	12	13	14	15	16	17	18	19	20
1	11	11	10	1	10	12	12	12	12											

SNAME(4) = SKND4 - >

	1	2	3	4	5	6	7	8	9	10	11	12	13	14	15	16	17	18	19	20
1	11	11	10	2	10	12	12	12	12											

SNAME(5) = SKND5 - >

	1	2	3	4	5	6	7	8	9	10	11	12	13	14	15	16	17	18	19	20
1	11	11	10	4	10	12	12	12	12											

SNAME(6) = SKND6 - >

	1	2	3	4	5	6	7	8	9	10	11	12	13	14	15	16	17	18	19	20
1	15	16	16	16	16	16	18	18	18											

SNAME(7) = SKND7 - >

	1	2	3	4	5	6	7	8	9	10	11	12	13	14	15	16	17	18	19	20
1	11	11	10	3	10	12	12	12	12											

SNAME(8) = SKND8 - >

```
          1    2    3    4    5    6    7    8    9   10   11   12   13   14   15   16   17   18   19   20
     ----------------------------------------------------------------------------------------------------
  1      11   11   10    9   10   12   12   12   12
SNAME( 9) = SKND9   - >
          1    2    3    4    5    6    7    8    9   10   11   12   13   14   15   16   17   18   19   20
     ----------------------------------------------------------------------------------------------------
  1      11   11   10    5   10   12   12   12   12
SNAME(10) = SKND10  - >
          1    2    3    4    5    6    7    8    9   10   11   12   13   14   15   16   17   18   19   20
     ----------------------------------------------------------------------------------------------------
  1      13   13   13   13   13   13   13   13   17
SNAME(11) = SKND11  - >
          1    2    3    4    5    6    7    8    9   10   11   12   13   14   15   16   17   18   19   20
     ----------------------------------------------------------------------------------------------------
  1      11   11   10    6   10   12   12   12   12
SNAME(12) = SKND12  - >
          1    2    3    4    5    6    7    8    9   10   11   12   13   14   15   16   17   18   19   20
     ----------------------------------------------------------------------------------------------------
  1      13   13   13   13   13   13   13   13   13
SNAME(13) = SKND13  - >
          1    2    3    4    5    6    7    8    9   10   11   12   13   14   15   16   17   18   19   20
     ----------------------------------------------------------------------------------------------------
  1      14   14   14   14   14   14   14   14   14
```

**** SUBASSEMBLY BOX NAME : TOTAL = 331 *****

	1	2	3	4	5	6	7	8	9	10
1	000	1A1	1B1	1C1	1D1	1E1	1F1	2A1	2A2	2B1
11	2B2	2C1	2C2	2D1	2D2	2E1	2E2	2F1	2F2	3A1
21	3A2	3A3	3B1	3B2	3B3	3C1	3C2	3C3	3D1	3D2
31	3D3	3E1	3E2	3E3	3F1	3F2	3F3	4A1	4A2	4A3
41	4A4	4B1	4B2	4B3	4B4	4C1	4C2	4C3	4C4	4D1
51	4D2	4D3	4D4	4E1	4E2	4E3	4E4	4F1	4F2	4F3
61	4F4	5A1	5A2	5A3	5A4	5A5	5B1	5B2	5B3	5B4
71	5B5	5C1	5C2	5C3	5C4	5C5	5D1	5D2	5D3	5D4
81	5D5	5E1	5E2	5E3	5E4	5E5	5F1	5F2	5F3	5F4
91	5F5	6A1	6A2	6A3	6A4	6A5	6A6	6B1	6B2	6B3
101	6B4	6B5	6B6	6C1	6C2	6C3	6C4	6C5	6C6	6D1
111	6D2	6D3	6D4	6D5	6D6	6E1	6E2	6E3	6E4	6E5
121	6E6	6F1	6F2	6F3	6F4	6F5	6F6	7A1	7A2	7A3
131	7A4	7A5	7A6	7A7	7B1	7B2	7B3	7B4	7B5	7B6
141	7B7	7C1	7C2	7C3	7C4	7C5	7C6	7C7	7D1	7D2
151	7D3	7D4	7D5	7D6	7D7	7E1	7E2	7E3	7E4	7E5
161	7E6	7E7	7F1	7F2	7F3	7F4	7F5	7F6	7F7	8A1
171	8A2	8A3	8A4	8A5	8A6	8A7	8A8	8B1	8B2	8B3
181	8B4	8B5	8B6	8B7	8B8	8C1	8C2	8C3	8C4	8C5
191	8C6	8C7	8C8	8D1	8D2	8D3	8D4	8D5	8D6	8D7
201	8D8	8E1	8E2	8E3	8E4	8E5	8E6	8E7	8E8	8F1
211	8F2	8F3	8F4	8F5	8F6	8F7	8F8	9A1	9A2	9A3
221	9A4	9A5	9A6	9A7	9A8	9A9	9B1	9B2	9B3	9B4
231	9B5	9B6	9B7	9B8	9B9	9C1	9C2	9C3	9C4	9C5
241	9C6	9C7	9C8	9C9	9D1	9D2	9D3	9D4	9D5	9D6
251	9D7	9D8	9D9	9E1	9E2	9E3	9E4	9E5	9E6	9E7
261	9E8	9E9	9F1	9F2	9F3	9F4	9F5	9F6	9F7	9F8
271	9F9	10A1	10A2	10A3	10A4	10A5	10A6	10A7	10A8	10A9
281	10A10	10B1	10B2	10B3	10B4	10B5	10B6	10B7	10B8	10B9
291	10B10	10C1	10C2	10C3	10C4	10C5	10C6	10C7	10C8	10C9
301	10C10	10D1	10D2	10D3	10D4	10D5	10D6	10D7	10D8	10D9
311	10D10	10E1	10E2	10E3	10E4	10E5	10E6	10E7	10E8	10E9
321	10E10	10F1	10F2	10F3	10F4	10F5	10F6	10F7	10F8	10F9

331 10F10

**** SUBASSEMBLY NUMBER ASSIGNED TO BOX : TOTAL = 331 *****

	1	2	3	4	5	6	7	8	9	10	11	12	13	14	15	16	17	18	19	20
1	1	3	2	3	2	3	2	4	4	4	4	4	4	4	4	4	4	4	4	5
21	6	5	5	6	7	5	8	7	5	6	5	5	6	7	5	1	7	9	9	9
41	9	9	9	9	9	9	9	9	9	9	9	9	9	9	9	9	9	9	9	9
61	9	11	11	11	11	11	10	11	11	11	6	11	11	11	11	11	11	11	11	11
81	11	10	11	11	11	6	11	11	11	11	11	12	10	10	10	10	10	12	10	10
101	10	10	10	12	10	10	10	10	10	12	10	10	10	10	10	12	10	10	10	10
121	10	12	10	10	10	10	10	12	12	12	12	12	12	12	12	12	12	12	12	12
141	12	12	12	12	12	12	12	12	12	12	12	12	12	12	12	12	12	12	12	12
161	12	12	12	12	12	12	12	12	12	12	12	12	12	12	12	12	12	12	12	12
181	12	12	12	12	12	12	12	12	12	12	12	12	12	12	12	12	12	12	12	12
201	12	12	12	12	12	12	12	12	12	12	12	12	12	12	12	12	12	13	13	13
221	13	13	13	13	13	13	13	13	13	13	13	13	13	13	13	13	13	13	13	13
241	13	13	13	13	13	13	13	13	13	13	13	13	13	13	13	13	13	13	13	13
261	13	13	13	13	13	13	13	13	13	13	13	13	13	13	13	13	13	13	13	13
281	13	13	13	13	13	13	13	13	13	13	13	13	13	13	13	13	13	13	13	13
301	13	13	13	13	13	13	13	13	13	13	13	13	13	13	13	13	13	13	13	13
321	13	13	13	13	13	13	13	13	13	13	13									

**** SPECIAL DATA : TOTAL = 0 *****

**** MESH LOCATION OF 1ST DIMENSION : TOTAL = 130 *****

	1	2	3	4	5
1	0.00000E+00	1.18296E+00	2.36592E+00	3.54889E+00	4.73185E+00
6	5.91481E+00	7.09777E+00	8.28073E+00	9.46369E+00	1.06467E+01
11	1.18296E+01	1.30126E+01	1.41955E+01	1.53785E+01	1.65615E+01
16	1.77444E+01	1.89274E+01	2.01104E+01	2.12933E+01	2.24763E+01
21	2.36592E+01	2.48422E+01	2.60252E+01	2.72081E+01	2.83911E+01
26	2.95740E+01	3.07570E+01	3.19400E+01	3.31229E+01	3.43059E+01
31	3.54889E+01	3.66718E+01	3.78548E+01	3.90377E+01	4.02207E+01
36	4.14037E+01	4.25866E+01	4.37696E+01	4.49525E+01	4.61355E+01
41	4.73185E+01	4.85014E+01	4.96844E+01	5.08674E+01	5.20503E+01
46	5.32333E+01	5.44162E+01	5.55992E+01	5.67822E+01	5.79651E+01
51	5.91481E+01	6.03311E+01	6.15140E+01	6.26970E+01	6.38799E+01
56	6.50629E+01	6.62459E+01	6.74288E+01	6.86118E+01	6.97947E+01
61	7.09777E+01	7.21607E+01	7.33436E+01	7.45266E+01	7.57096E+01
66	7.68925E+01	7.80755E+01	7.92584E+01	8.04414E+01	8.16244E+01
71	8.28073E+01	8.39903E+01	8.51733E+01	8.63562E+01	8.75392E+01
76	8.87221E+01	8.99051E+01	9.10881E+01	9.22710E+01	9.34540E+01
81	9.46369E+01	9.58199E+01	9.70029E+01	9.81858E+01	9.93688E+01
86	1.00552E+02	1.01735E+02	1.02918E+02	1.04101E+02	1.05284E+02
91	1.06467E+02	1.07650E+02	1.08832E+02	1.10015E+02	1.11198E+02
96	1.12381E+02	1.13564E+02	1.14747E+02	1.15930E+02	1.17113E+02
101	1.18296E+02	1.19479E+02	1.20662E+02	1.21845E+02	1.23028E+02
106	1.24211E+02	1.25394E+02	1.26577E+02	1.27760E+02	1.28943E+02
111	1.30126E+02	1.31309E+02	1.32492E+02	1.33675E+02	1.34858E+02
116	1.36041E+02	1.37224E+02	1.38407E+02	1.39589E+02	1.40772E+02
121	1.41955E+02	1.43138E+02	1.44321E+02	1.45504E+02	1.46687E+02
126	1.47870E+02	1.49053E+02	1.50236E+02	1.51419E+02	1.52602E+02

**** MESH LOCATION OF 2ND DIMENSION : TOTAL = 85 *****

1	2	3	4	5

1	0.00000E+00	2.04895E+00	4.09790E+00	6.14685E+00	8.19580E+00
6	1.02448E+01	1.22937E+01	1.43427E+01	1.63916E+01	1.84406E+01
11	2.04895E+01	2.25385E+01	2.45874E+01	2.66364E+01	2.86853E+01
16	3.07343E+01	3.27832E+01	3.48322E+01	3.68811E+01	3.89301E+01
21	4.09790E+01	4.30280E+01	4.50769E+01	4.71259E+01	4.91748E+01
26	5.12238E+01	5.32727E+01	5.53217E+01	5.73706E+01	5.94196E+01
31	6.14685E+01	6.35175E+01	6.55664E+01	6.76154E+01	6.96643E+01
36	7.17133E+01	7.37622E+01	7.58112E+01	7.78601E+01	7.99091E+01
41	8.19580E+01	8.40070E+01	8.60559E+01	8.81049E+01	9.01538E+01
46	9.22028E+01	9.42517E+01	9.63007E+01	9.83496E+01	1.00399E+02
51	1.02448E+02	1.04496E+02	1.06545E+02	1.08594E+02	1.10643E+02
56	1.12692E+02	1.14741E+02	1.16790E+02	1.18839E+02	1.20888E+02
61	1.22937E+02	1.24986E+02	1.27035E+02	1.29084E+02	1.31133E+02
66	1.33182E+02	1.35231E+02	1.37280E+02	1.39329E+02	1.41378E+02
71	1.43427E+02	1.45475E+02	1.47524E+02	1.49573E+02	1.51622E+02
76	1.53671E+02	1.55720E+02	1.57769E+02	1.59818E+02	1.61867E+02
81	1.63916E+02	1.65965E+02	1.68014E+02	1.70063E+02	1.72112E+02

**** AXIAL MESH LOCATION : TOTAL = 10 *****

	1	2	3	4	5
1	0.00000E+00	1.90000E+01	2.15000E+01	2.27040E+01	7.33590E+01
6	7.45660E+01	8.05315E+01	9.55315E+01	9.80315E+01	1.04566E+02

**** REGION VOLUMES (CC) : TOTAL = 18 *****

	1	2	3	4	5
1	8.84002E+03	3.53599E+04	1.17867E+04	2.35733E+04	7.07186E+04
6	7.66106E+04	5.89337E+03	8.84002E+03	2.94670E+03	1.16333E+04
11	1.03656E+05	1.44627E+05	7.65336E+05	6.92451E+05	6.63148E+03
16	2.14753E+04	1.21626E+04	8.38822E+03		

```
             *****  REGION ASSIGNMENTS TO MESH INTERVALS  *****  - PAGE 1 -

            ((IREGN(I,J),I=1,MAXI),J=1,MAXJ)
                   REGION NUMBERS ASSIGNED TO MESH INTERVALS
                                    AXIAL POSITION : H(CM)=  22.70 -   73.36
--- REMARKS ---
 :NO REGION
1:KCORE1      2:KCORE2      3:KCOR3I      4:KCOR3O      5:KCORE4      6:KCORE5
7:KTYPEB      8:KTYPEC      9:KCMTYB      A:KINSLT      B:KLSLD       C:KUSLD
D:KRSLDC      E:KNTSLD      F:KCRADP      G:KCRABS      H:KINUSD      I:KUCRDP
 X-DIRECTION RANGE :  1 - 100
 ==>    ....+....1....+....2....+....3....+....4....+....5....+....6....+....7....+....8....+....9....+....0
    .                                                                 EEEEE
    .                                                                EEEEEEE
    .                                                           EEEEEEEEEEEEEEEEE
    .                                                          EEEEEEEEEEEEEEEEEEE
   80                                                     EEEEEEEEEEEEEEEEEEEEEEEEEEEEE
    .                                                    EEEEEEEEEEEEEEEEEEEEEEEEEEEEEEE
    .                                               EEEEEEEEEEEEEEEEEEEEEEEEEEEEEEEEEEEEEEEEE
    .                                              EEEEEEEEEEEEEEEEEEEEEEEEEEEEEEEEEEEEEEEEEEE
    .                                         EEEEEEEEEEEEEEEEEEEEEEEEEDDDDEEEEEEEEEEEEEEEEEEEEEEEE
    +                                        EEEEEEEEEEEEEEEEEEEEEEEEEDDDDDEEEEEEEEEEEEEEEEEEEEEEEEE
    .                                   EEEEEEEEEEEEEEEEEEEEEEEEEDDDDDDDDDDDDDDDEEEEEEEEEEEEEEEEEEEEEEEEE
    .                                  EEEEEEEEEEEEEEEEEEEEEEEEEDDDDDDDDDDDDDDDDEEEEEEEEEEEEEEEEEEEEEEEEEE
    .                             EEEEEEEEEEEEEEEEEEEEEEEEEDDDDDDDDDDDDDDDDDDDDDDDEEEEEEEEEEEEEEEEEEEEEEEEEE
    .                            EEEEEEEEEEEEEEEEEEEEEEEEEDDDDDDDDDDDDDDDDDDDDDDDDDEEEEEEEEEEEEEEEEEEEEEEEEE
   70                       EEEEEEEEEEEEEEEEEEEEEEEEEDDDDDDDDDDDDDDDDDDDDDDDDDDDDDDDDDDDDDDDEEEEEEEEEEEEEEEE
    .                      EEEEEEEEEEEEEEEEEEEEEEEEEDDDDDDDDDDDDDDDDDDDDDDDDDDDDDDDDDDDDDDDDDEEEEEEEEEEEEEEE
    .                 EEEEEEEEEEEEEEEEEEEEEEEEEDDDDDDDDDDDDDDDDDDDDDDDDDDDDDDDDDDDDDDDDDDDDDDDDDDDEEEEEEEEEE
    .                EEEEEEEEEEEEEEEEEEEEEEEEEDDDDDDDDDDDDDDDDDDDDDDDDDDDDDDDDDDDDDDDDDDDDDDDDDDDDDEEEEEEEEE
    .           EEEEEEEEEEEEEEEEEEEEEEEEEDDDDDDDDDDDDDDDDDDDDDDDDDDDDDDDDDDDDDDDDDDDDDDDDDDDDDDDDDDDDDDDDEEE
    +          EEEEEEEEEEEEEEEEEEEEEEEEEDDDDDDDDDDDDDDDDDDDDDDDDDDDDDDDDDDDDDDDDDDDDDDDDDDDDDDDDDDDDDDDDDDEE
    .     EEEEEEEEEEEEEEEEEEEEEEEEEDDDDDDDDDDDDDDDDDDDDDDDDDDDDDDDDDDD66666DDDDDDDDDDDDDDDDDDDDDDDDDDDDDDDDD
    .    EEEEEEEEEEEEEEEEEEEEEEEEEDDDDDDDDDDDDDDDDDDDDDDDDDDDDDDDDDDD6666666DDDDDDDDDDDDDDDDDDDDDDDDDDDDDDD
    .    EEEEEEEEEEEEEEEEEEEDDDDDDDDDDDDDDDDDDDDDDDDDDDDDDDDDDDD66666666666666666DDDDDDDDDDDDDDDDDDDDDDDDDDD
    .     EEEEEEEEEEEEEEEEEDDDDDDDDDDDDDDDDDDDDDDDDDDDDDDDDDDDD6666666666666666666DDDDDDDDDDDDDDDDDDDDDDDDDD
   60     EEEEEEEEEEEEDDDDDDDDDDDDDDDDDDDDDDDDDDDDDDDDDDDD66666666666655556666666666666DDDDDDDDDDDDDDDDDDDDD
    .    EEEEEEEEEEEEDDDDDDDDDDDDDDDDDDDDDDDDDDDDDDDDDDDD66666666666655555556666666666666DDDDDDDDDDDDDDDDDDDD
    .    EEEEEEEEEEEEDDDDDDDDDDDDDDDDDDDDDDDDDDDDDDD66666666666655555555555555555666666666666DDDDDDDDDDDDDDD
    .     EEEEEEEEEEEEDDDDDDDDDDDDDDDDDDDDDDDDDDDDD6666666666665555555555555555555666666666666DDDDDDDDDDDDDD
    .     EEEEEEEEEEEEDDDDDDDDDDDDDDDDDDDDDDDD66666666666655555555555554444555555555555666666666666DDDDDDDDD
    +    EEEEEEEEEEEEDDDDDDDDDDDDDDDDDDDDDDDD666666666666555555555555444444455555555555566666666666 6DDDDDDDD
    .    EEEEEEEEEEEEDDDDDDDDDDDDDDDDDDD666666666666555555555555333334444444GGGGG55555555555566666666DDDDDDD
    .     EEEEEEEEEEEEDDDDDDDDDDDDDDDDD6666666666665555555555553333333444445GGGGGGG555555555555666666DDDDDDDD
    .     EEEEEEEEEEEEDDDDDDDDDDDDDDDDDD666666655555555555577777333333322222GGGGGGG44445555555555555DDDDDDDD
    .    EEEEEEEEEEEEDDDDDDDDDDDDDDDDDDDD666665555555555555777777733333222222GGGGG4444445555555555555DDDDDDD
   50    EEEEEEEEEEEEDDDDDDDDDDDDDDDDDDGGGGG55555544444777777722222222222222222224444444444445555555666666DDD
    .     EEEEEEEEEEEEDDDDDDDDDDDDDDDDDDDDGGGGGG5555444444477777222222222222222222244444444444455556666666DD
    .     EEEEEEEEEEEEDDDDDDDDDDDDDDDDDDGGGGGG55554444444222222222222211112222222222222444444445555666666 6DD
    .    EEEEEEEEEEEEDDDDDDDDDDDDDDDDDDGGGGG55555554444422222222222221111112222222222222444445555555666666DDD
    .    EEEEEEEEEEEEDDDDDDDDDDDDDDDDDDDD6666655555553333322222228888811111188888222222 2GGGGG555555566666DDD
    +     EEEEEEEEEEEEDDDDDDDDDDDDDDDDDDDDD66666665555333333322228888888111118888888222 2GGGGGGG55556666666DD
    .    EEEEEEEEEEEEDDDDDDDDDDDDDDDDDDDD66666665555333333322222888888877777888888822222GGGGGGG55556666666DD
    .    EEEEEEEEEEEEDDDDDDDDDDDDDDDDDDD666665555555333332222222888887777777888882222222GGGGG555555566666DDD
    .    EEEEEEEEEEEEDDDDDDDDDDDDDDDDDDD66666555555 5GGGGG222222211111777777711111222222233333555555566666DDD
    .     EEEEEEEEEEEEDDDDDDDDDDDDDDDDDDDDD66666665555GGGGGGG222211111117777711111112222333333355556666666DD
   40    EEEEEEEEEEEEDDDDDDDDDDDDDDDDDDDDDD66666665555GGGGGGG222211111118888811111112222333333355556666666DD
    .    EEEEEEEEEEEEDDDDDDDDDDDDDDDDDDD666665555555GGGGG222222211111888888811111222222233333555555566666DDD
    .    EEEEEEEEEEEEDDDDDDDDDDDDDDDDDDD66666555555544444222222222222288888222222222222244444555555 5GGGGGDDD
    .     EEEEEEEEEEEEDDDDDDDDDDDDDDDDD666666655554444444222222222222288888222222222222244444445555GGGGGGGDD
```


炉心マップ出力 他は省略

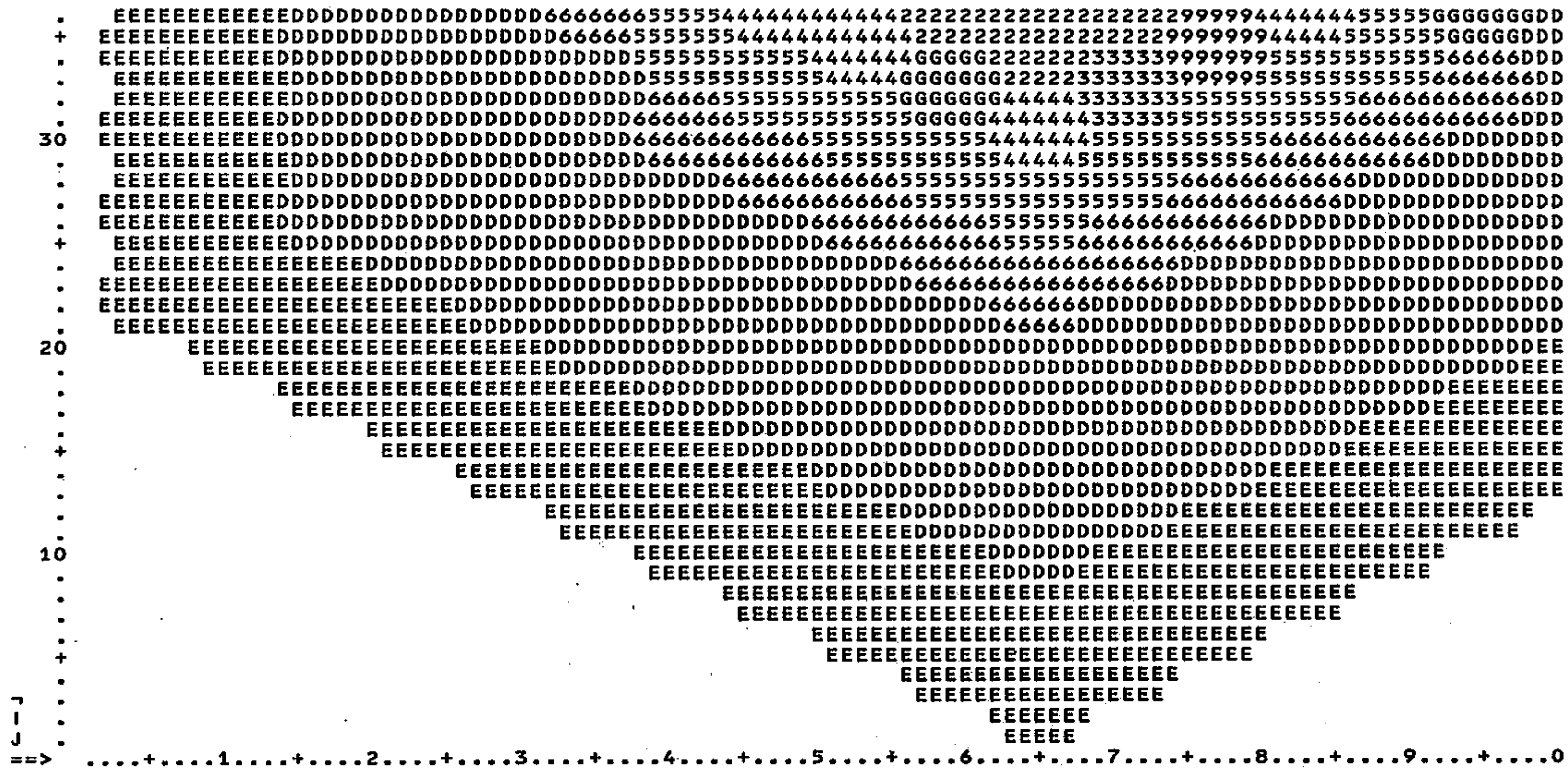
30
20
10
==>
....+....1....+....2....+....3....+....4....+....5....+....6....+....7....+....8....+....9....+....0

```
            *****  REGION ASSIGNMENTS TO MESH INTERVALS  *****  - PAGE 2 -

            ((IREGN(I,J),I=1,MAXI),J=1,MAXJ)
                   REGION NUMBERS ASSIGNED TO MESH INTERVALS
                                   AXIAL POSITION : H(CM)=  22.70 -   73.36
--- REMARKS ---
 :NO REGION
1:KCORE1     2:KCORE2     3:KCOR3I     4:KCOR3O     5:KCORE4     6:KCORE5
7:KTYPEB     8:KTYPEC     9:KCMTYB     A:KINSLT     B:KLSLD      C:KUSLD
D:KRSLDC     E:KNTSLD     F:KCRADP     G:KCRABS     H:KINUSD     I:KUCRDP
 X-DIRECTION RANGE :101 - 129
 ==>  ....+....1....+....2....+....3
    .
    .
    .
    .
   80
    .
    .
    .
    .
    +
    .
    .
    . EEE
    . EEEE
   70 EEEEEEEEE
    . EEEEEEEEEE
    . EEEEEEEEEEEEEEE
    . EEEEEEEEEEEEEEE
    . EEEEEEEEEEEEEEEEEEEEE
    + EEEEEEEEEEEEEEEEEEEEE
    . DDDEEEEEEEEEEEEEEEEEEEEEEEE
    . DDDDEEEEEEEEEEEEEEEEEEEEEEE
    . DDDDDDDDDEEEEEEEEEEEEEEEEEE
    . DDDDDDDDDEEEEEEEEEEEEEEEEE
   60 DDDDDDDDDDDDDDDEEEEEEEEEEE
    . DDDDDDDDDDDDDDDDEEEEEEEEEEE
    . DDDDDDDDDDDDDDDDEEEEEEEEEEE
    . DDDDDDDDDDDDDDDDEEEEEEEEEE
    . DDDDDDDDDDDDDDDEEEEEEEEEEE
    + DDDDDDDDDDDDDDDDEEEEEEEEEEE
    . DDDDDDDDDDDDDDDDEEEEEEEEEEE
    . DDDDDDDDDDDDDDDDEEEEEEEEEE
    . DDDDDDDDDDDDDDDEEEEEEEEEEE
    . DDDDDDDDDDDDDDDDEEEEEEEEEEE
   50 DDDDDDDDDDDDDDDDEEEEEEEEEEE
    . DDDDDDDDDDDDDDDDEEEEEEEEEE
    . DDDDDDDDDDDDDDDEEEEEEEEEEE
    . DDDDDDDDDDDDDDDDEEEEEEEEEEE
    . DDDDDDDDDDDDDDDDEEEEEEEEEEE
    + DDDDDDDDDDDDDDDEEEEEEEEEEE
    . DDDDDDDDDDDDDDDDEEEEEEEEEE
    . DDDDDDDDDDDDDDDDEEEEEEEEEEE
    . DDDDDDDDDDDDDDDDEEEEEEEEEEE
    . DDDDDDDDDDDDDDDEEEEEEEEEEE
   40 DDDDDDDDDDDDDDDDEEEEEEEEEEE
    . DDDDDDDDDDDDDDDDEEEEEEEEEEE
    . DDDDDDDDDDDDDDDDEEEEEEEEEEE
    . DDDDDDDDDDDDDDDEEEEEEEEEEE
```

```
 . DDDDDDDDDDDDDDDDEEEEEEEEEEEE
 + DDDDDDDDDDDDDDDDEEEEEEEEEEEEE
 . DDDDDDDDDDDDDDDDEEEEEEEEEEEEE
 . DDDDDDDDDDDDDDDEEEEEEEEEEEEE
 . DDDDDDDDDDDDDDDEEEEEEEEEEEEE
 . DDDDDDDDDDDDDDDDEEEEEEEEEEEEE
30 DDDDDDDDDDDDDDDDEEEEEEEEEEEEE
 . DDDDDDDDDDDDDDDEEEEEEEEEEEEE
 . DDDDDDDDDDDDDDDEEEEEEEEEEEEE
 . DDDDDDDDDDDDDDDDEEEEEEEEEEEEE
 . DDDDDDDDDDDDDDDDEEEEEEEEEEEEE
 + DDDDDDDDDDDDDDDEEEEEEEEEEEEE
 . DDDDDDDDDDEEEEEEEEEEEEEEEEEE
 . DDDDDDDDDEEEEEEEEEEEEEEEEEEEE
 . DDDDEEEEEEEEEEEEEEEEEEEEEEEE
 . DDDEEEEEEEEEEEEEEEEEEEEEEEEE
20 EEEEEEEEEEEEEEEEEEEEEE
 . EEEEEEEEEEEEEEEEEEEEE
 . EEEEEEEEEEEEEEEE
 . EEEEEEEEEEEEEEE
 . EEEEEEEEEE
 + EEEEEEEEE
 . EEEE
 . EEE
 .
 .
10
 .
 .
 .
 .
 +
 .
 .
 .
 .
==>  ....+....1....+....2....+....3
```

マクロ定数出力 他は省略

********** EDIT OF NON-FISSIONABLE COMPOSITION 27 (UCRDP) IN MXSBIN **********

GROUP	ABSORPTION CROSS SECTION	DIRECTIONAL DIFFUSION COEFFICIENTS D1	D2	D3	REMOVAL CROSS SECTION	POWER CONVERSION FACTOR
1	3.256300E-03	6.072486E+00	6.072486E+00	6.072486E+00	4.487091E-02	0.000000E+00
2	1.079030E-03	5.424950E+00	5.424950E+00	5.424950E+00	4.161655E-02	0.000000E+00
3	3.289370E-04	4.872269E+00	4.872269E+00	4.872269E+00	3.299260E-02	0.000000E+00
4	1.169570E-04	4.534808E+00	4.534808E+00	4.534808E+00	2.816079E-02	0.000000E+00
5	9.564340E-05	3.863682E+00	3.863682E+00	3.863682E+00	2.781891E-02	0.000000E+00
6	1.164510E-04	3.188572E+00	3.188572E+00	3.188572E+00	1.578175E-02	0.000000E+00
7	1.310280E-04	3.117362E+00	3.117362E+00	3.117362E+00	1.131803E-02	0.000000E+00
8	1.903680E-04	2.640933E+00	2.640933E+00	2.640933E+00	1.097884E-02	0.000000E+00
9	2.117170E-04	2.303856E+00	2.303856E+00	2.303856E+00	1.186857E-02	0.000000E+00
10	3.901260E-04	1.892778E+00	1.892778E+00	1.892778E+00	1.286616E-02	0.000000E+00
11	5.066760E-04	1.385529E+00	1.385529E+00	1.385529E+00	1.800798E-02	0.000000E+00
12	6.447720E-04	8.715303E-01	8.715303E-01	8.715303E-01	2.772297E-02	0.000000E+00
13	1.284720E-03	4.452881E-01	4.452881E-01	4.452881E-01	8.952092E-02	0.000000E+00
14	2.364970E-03	1.321110E+00	1.321110E+00	1.321110E+00	1.306227E-02	0.000000E+00
15	7.538800E-04	1.521639E+00	1.521639E+00	1.521639E+00	9.688320E-03	0.000000E+00
16	2.806150E-03	1.182331E+00	1.182331E+00	1.182331E+00	1.340085E-02	0.000000E+00
17	1.423870E-03	1.391992E+00	1.391992E+00	1.391992E+00	9.546420E-03	0.000000E+00
18	2.888480E-03	1.358681E+00	1.358681E+00	1.358681E+00	2.888480E-03	0.000000E+00

SCATTERING CROSS SECTION (TOTAL)

INTO GROUP	FROM GROUP									
2	1	7.552470E-03								
3	1	1.118220E-02	2	1.327020E-02						
4	1	1.021490E-02	2	9.481300E-03	3	2.292830E-02				
5	1	6.451170E-03	2	8.577690E-03	3	3.658440E-03	4	2.016720E-02		
6	1	4.454840E-03	2	5.522320E-03	3	2.700600E-03	4	6.371220E-03	5	2.344400E-02
7	1	1.336560E-03	2	2.436940E-03	3	1.694280E-03	4	7.187590E-04	5	2.637730E-03
	6	1.439390E-02								
8	1	3.439280E-04	2	8.891590E-04	3	1.062450E-03	4	4.119170E-04	5	1.094360E-03
	6	1.016640E-03	7	1.114510E-02						
9	1	8.213360E-05	2	2.675000E-04	3	3.713430E-04	4	2.113360E-04	5	3.072440E-04
	6	1.866330E-04	7	3.643440E-05	8	1.076720E-02				
10	1	1.892170E-05	2	7.047710E-05	3	1.323100E-04	4	1.144150E-04	5	9.349800E-05
	6	4.904080E-05	7	8.709130E-07	8	1.455960E-05	9	1.165540E-02		
11	1	3.918370E-06	2	1.756810E-05	3	6.799130E-05	4	3.629210E-05	5	8.761590E-05
	6	1.427270E-05	7	2.638790E-06	8	4.204560E-06	9	1.039880E-06	10	1.235300E-02
12	1	4.197140E-07	2	3.763650E-06	3	3.650750E-05	4	1.020110E-05	5	4.950520E-05
	6	3.510480E-06	7	1.499000E-06	8	1.396870E-06	9	3.193630E-07	10	1.227980E-04
	11	1.745950E-02								
13	1	0.000000E+00	2	6.052350E-07	3	1.139240E-05	4	2.460450E-06	5	6.880100E-06
	6	9.737610E-07	7	3.462920E-07	8	7.608650E-07	9	7.354060E-08	10	2.346610E-07
	11	3.224490E-05	12	2.707820E-02						
14	1	0.000000E+00	2	0.000000E+00	3	4.823690E-08	4	3.406990E-08	5	1.861020E-06
	6	2.685520E-07	7	8.233680E-08	8	2.651990E-07	9	1.679090E-08	10	0.000000E+00
	11	7.281770E-06	12	0.000000E+00	13	8.823620E-02				
15	1	0.000000E+00	2	0.000000E+00	3	0.000000E+00	4	0.000000E+00	5	5.767130E-07
	6	6.210830E-08	7	2.047720E-08	8	6.230820E-08	9	3.875940E-09	10	0.000000E+00
	11	1.631220E-06	12	0.000000E+00	13	0.000000E+00	14	1.069730E-02		

SCATTERING CROSS SECTION (TOTAL) - CONTINUED

INTO GROUP FROM GROUP

16	1	0.000000E+00	2	0.000000E+00	3	0.000000E+00	4	0.000000E+00	5	0.000000E+00
	6	0.000000E+00	7	5.410230E-09	8	1.540220E-08	9	8.940590E-10	10	0.000000E+00
	11	4.681890E-07	12	0.000000E+00	13	0.000000E+00	14	0.000000E+00	15	8.934440E-03
17	1	0.000000E+00	2	0.000000E+00	3	0.000000E+00	4	0.000000E+00	5	0.000000E+00
	6	0.000000E+00	7	0.000000E+00	8	3.598390E-09	9	2.233860E-10	10	0.000000E+00
	11	1.384490E-07	12	0.000000E+00	13	0.000000E+00	14	0.000000E+00	15	0.000000E+00
	16	1.059470E-02								
18	1	0.000000E+00	2	0.000000E+00	3	0.000000E+00	4	0.000000E+00	5	0.000000E+00
	6	0.000000E+00	7	0.000000E+00	8	4.470230E-10	9	0.000000E+00	10	0.000000E+00
	11	4.295990E-08	12	0.000000E+00	13	0.000000E+00	14	0.000000E+00	15	0.000000E+00
	16	0.000000E+00	17	8.122550E-03						

```
(ORPCAL) OPTIMUM OVERRELAXATION FACTOR CALCULATION FOR GROUP    1 WAS TERMINATED AT THE MAXIMUM ITERATION THRESHOLD
(ORPCAL) OPTIMUM OVERRELAXATION FACTOR CALCULATION FOR GROUP    2 WAS TERMINATED AT THE MAXIMUM ITERATION THRESHOLD
(ORPCAL) OPTIMUM OVERRELAXATION FACTOR CALCULATION FOR GROUP    3 WAS TERMINATED AT THE MAXIMUM ITERATION THRESHOLD
(ORPCAL) OPTIMUM OVERRELAXATION FACTOR CALCULATION FOR GROUP    4 WAS TERMINATED AT THE MAXIMUM ITERATION THRESHOLD
(ORPCAL) OPTIMUM OVERRELAXATION FACTOR CALCULATION FOR GROUP    5 WAS TERMINATED AT THE MAXIMUM ITERATION THRESHOLD
(ORPCAL) OPTIMUM OVERRELAXATION FACTOR CALCULATION FOR GROUP    6 WAS TERMINATED AT THE MAXIMUM ITERATION THRESHOLD
(ORPCAL) OPTIMUM OVERRELAXATION FACTOR CALCULATION FOR GROUP    7 WAS TERMINATED AT THE MAXIMUM ITERATION THRESHOLD
(ORPCAL) OPTIMUM OVERRELAXATION FACTOR CALCULATION FOR GROUP    8 WAS TERMINATED AT THE MAXIMUM ITERATION THRESHOLD
(ORPCAL) OPTIMUM OVERRELAXATION FACTOR CALCULATION FOR GROUP    9 WAS TERMINATED AT THE MAXIMUM ITERATION THRESHOLD
(ORPCAL) OPTIMUM OVERRELAXATION FACTOR CALCULATION FOR GROUP   10 WAS TERMINATED AT THE MAXIMUM ITERATION THRESHOLD
(ORPCAL) OPTIMUM OVERRELAXATION FACTOR CALCULATION FOR GROUP   11 WAS TERMINATED AT THE MAXIMUM ITERATION THRESHOLD
(ORPCAL) OPTIMUM OVERRELAXATION FACTOR CALCULATION FOR GROUP   12 WAS TERMINATED AT THE MAXIMUM ITERATION THRESHOLD
(ORPCAL) OPTIMUM OVERRELAXATION FACTOR CALCULATION FOR GROUP   14 WAS TERMINATED AT THE MAXIMUM ITERATION THRESHOLD
(ORPCAL) OPTIMUM OVERRELAXATION FACTOR CALCULATION FOR GROUP   15 WAS TERMINATED AT THE MAXIMUM ITERATION THRESHOLD
(ORPCAL) OPTIMUM OVERRELAXATION FACTOR CALCULATION FOR GROUP   16 WAS TERMINATED AT THE MAXIMUM ITERATION THRESHOLD
(ORPCAL) OPTIMUM OVERRELAXATION FACTOR CALCULATION FOR GROUP   17 WAS TERMINATED AT THE MAXIMUM ITERATION THRESHOLD
(ORPCAL) OPTIMUM OVERRELAXATION FACTOR CALCULATION FOR GROUP   18 WAS TERMINATED AT THE MAXIMUM ITERATION THRESHOLD
```

OUTER ITERATION SUMMARY REAL SOLUTION K-EFF. PROBLEM

OPTIMIZED INNER ITERATION STRATEGY

GROUP NO.	OPTIMUM OMEGA	NO. OF INNERS	GROUP NO.	OPTIMUM OMEGA	NO. OF INNERS	GROUP NO.	OPTIMUM OMEGA	NO. OF INNERS	GROUP NO.	OPTIMUM OMEGA	NO. OF INNERS
1	1.61929E+00	12	2	1.61429E+00	12	3	1.63625E+00	13	4	1.63726E+00	13
5	1.65487E+00	14	6	1.70569E+00	17	7	1.69861E+00	16	8	1.68252E+00	15
9	1.66048E+00	14	10	1.60716E+00	12	11	1.51896E+00	9	12	1.44103E+00	8
13	1.26598E+00	5	14	1.53577E+00	10	15	1.55505E+00	10	16	1.48088E+00	9
17	1.54060E+00	10	18	1.62074E+00	13						

OUTER IT. NO.	REL. POINT ERROR	REL. SUM ERROR	EIGENVALUE CHANGE	POLY. ORDER	DOM. RATIO USED	DOM. RATIO ESTIMATED	K-EFFECTIVE
1	3.760508E-01	2.390345E-01	-1.504635E-01	0	0.000000E+00	0.000000E+00	8.49536458E-01
2	2.004911E-01	7.706623E-02	2.926970E-02	0	0.000000E+00	3.053210E-01	8.78806156E-01
3	6.210768E-02	2.658776E-02	4.923140E-03	0	0.000000E+00	3.576595E-01	8.83729296E-01
4	2.657854E-02	1.118211E-02	1.566064E-03	0	0.000000E+00	4.249377E-01	8.85295360E-01
5	1.264248E-02	5.402863E-03	5.787262E-04	1	4.249377E-01	4.249377E-01	8.85874086E-01
6	5.500886E-03	2.380977E-03	2.712384E-04	2	4.249377E-01	5.601256E-01	8.86145324E-01
7	2.974188E-03	1.353376E-03	9.848858E-05	3	4.249377E-01	6.279301E-01	8.86243813E-01
8	1.939599E-03	9.355614E-04	1.258175E-05	1	6.279301E-01	6.279301E-01	8.86256395E-01

9	1.188023E-03	6.254779E-04	-5.044549E-06	2	6.279301E-01	7.726207E-01	8.86251350E-01
10	6.222522E-04	3.586793E-04	-4.906647E-06	3	6.279301E-01	7.731249E-01	8.86246444E-01
11	4.592050E-04	2.291358E-04	-1.272022E-05	1	7.731249E-01	7.731249E-01	8.86233723E-01
12	2.786624E-04	1.500186E-04	-8.021236E-06	2	7.731249E-01	7.881824E-01	8.86225702E-01
13	9.939432E-05	5.933219E-05	-1.442349E-06	3	7.731249E-01	7.774677E-01	8.86224260E-01

OUTER ITERATIONS COMPLETED AT ITERATION 13, ITERATIONS HAVE CONVERGED

K-EFFECTIVE = 0.88622425971

TO RESTART THIS CALCULATION, INPUT FOLLOWING VALUES

DOMINANCE RATIO (SIGBAR) = 7.774677496988E-01

OPTIMIZED OVER-RELAXATION FACTORS

GROUP NO.	OPTIMUM OMEGA	GROUP NO.	OPTIMUM OMEGA	GROUP NO.	OPTIMUM OMEGA	GROUP NO.	OPTIMUM OMEGA	GROUP NO.	OPTIMUM OMEGA
1	1.61929E+00	2	1.61429E+00	3	1.63625E+00	4	1.63726E+00	5	1.65487E+00
6	1.70569E+00	7	1.69861E+00	8	1.68252E+00	9	1.66048E+00	10	1.60716E+00
11	1.51896E+00	12	1.44103E+00	13	1.26598E+00	14	1.53577E+00	15	1.55505E+00
16	1.48088E+00	17	1.54060E+00	18	1.62074E+00				

```
* * * * * * * * * * * * * * * * * * * * * * *
*                                           *
*                ERROR COUNT                *
*                                           *
*                ERROR            NO. OF    *
*   SUBROUTINE    NO.     TYPE    ERRORS    *
*     ORPCAL      100   NONFATAL    17      *
*                                           *
* * * * * * * * * * * * * * * * * * * * * * *
```

MAXIMUM POWER DENSITY 9.03565E+02 OCCURS AT MESH CELL (I,J,K) = (55, 53, 11)

REGION AND AREA BALANCE INTEGRALS FOR REAL K-EFF PROBLEM WITH ENERGY RANGE (EV) =(1.000E+00,1.000E+00)

REGION NO.	REGION NAME	ZONE NO.	ZONE NAME	NET LEAKAGE	+ ABSORPTION RATE(1)	+ SCATTER OUT(2)	- SCATTER IN	- FISSION PRODUCTION(3)	- EXTERNAL SOURCE	= BALANCE
1	KCORE1	1	CORE1	3.48559E+17	3.21208E+17	1.20160E+18	1.20247E+18	6.68893E+17	0.00000E+00	1.01669E+13
2	KCORE2	2	CORE2	1.26856E+18	1.14502E+18	4.43070E+18	4.43403E+18	2.41023E+18	0.00000E+00	3.41645E+13
3	KCOR3I	3	CRIN3	4.05083E+17	3.64067E+17	1.41075E+18	1.41183E+18	7.68057E+17	0.00000E+00	8.24084E+12
4	KCOR3O	4	CROT3	8.64866E+17	7.20865E+17	2.62525E+18	2.62728E+18	1.58369E+18	0.00000E+00	1.33658E+13
5	KCORE4	5	CORE4	2.32485E+18	1.98431E+18	7.07464E+18	7.08004E+18	4.30373E+18	0.00000E+00	2.64737E+13
6	KCORE5	6	CORE5	2.06523E+18	1.91992E+18	6.26543E+18	6.26967E+18	3.98090E+18	0.00000E+00	1.42664E+13
7	KTYPEB	7	TYPEB	4.74136E+16	8.82682E+16	5.84088E+17	5.84247E+17	1.35511E+17	0.00000E+00	1.28036E+13
8	KTYPEC	8	TYPEC	1.43240E+17	2.12516E+17	1.03012E+18	1.03054E+18	3.55323E+17	0.00000E+00	1.39370E+13
9	KCMTYB	9	CMTYB	8.83292E+15	2.33285E+16	2.26598E+17	2.26638E+17	3.21216E+16	0.00000E+00	4.68045E+10
10	KINSLT	10	INSLT	-3.53048E+16	9.48979E+16	7.53855E+17	7.54295E+17	5.91478E+16	0.00000E+00	5.16097E+12
11	KLSLD	11	LSLD	-1.08160E+17	1.08234E+17	2.43202E+18	2.43203E+18	0.00000E+00	0.00000E+00	6.33175E+13
12	KUSLD	12	USLD	-1.98843E+17	1.98896E+17	3.20330E+18	3.20331E+18	0.00000E+00	0.00000E+00	4.03848E+13
13	KRSLDC	13	RSLDC	-1.43236E+18	1.43233E+18	1.57005E+19	1.57006E+19	0.00000E+00	0.00000E+00	-1.37254E+14

14	KNTSLD	14	NTSLD	-1.74499E+18	1.74495E+18	3.93779E+18	3.93779E+18	0.00000E+00	0.00000E+00	-3.89256E+13
15	KCRADP	15	CRADP	-3.45973E+15	3.46651E+15	1.06778E+17	1.06778E+17	0.00000E+00	0.00000E+00	6.45319E+12
16	KCRABS	16	CRABS	-1.93689E+18	1.93691E+18	2.15660E+18	2.15661E+18	0.00000E+00	0.00000E+00	1.53450E+13
17	KINUSD	21	INUSD	-4.37736E+15	4.37711E+15	5.07546E+16	5.07546E+16	0.00000E+00	0.00000E+00	-2.96430E+11
18	KUCRDP	27	UCRDP	-3.55062E+15	3.55526E+15	1.17370E+17	1.17370E+17	0.00000E+00	0.00000E+00	4.46940E+12
	TOTALS			2.00871E+18	1.23071E+19	5.33081E+19	5.33263E+19	1.42976E+19	0.00000E+00	9.21202E+13

(1) ABSORPTION = CAPTURE + FISSION
(2) SCATTER OUT = TOTAL OUTSCATTER - (N,2N) SOURCE (N,2N) SOURCE = SCATTER IN - SCATTER OUT
(3) FISSION PRODUCTION = FISSION SOURCE / K-EFF

REGION NO.	NAME	ZONE NO.	ZONE NAME	LEAKAGE PLANAR	LEAKAGE Y	LEAKAGE Z	BUCKLING(4) TOTAL	BUCKLING(4) PLANAR	BUCKLING(4) Y	BUCKLING(4) Z
1	KCORE1	1	CORE1	2.31090E+17	6.54340E+16	1.17469E+17	4.84414E-03	3.21160E-03	9.09376E-04	1.63254E-03
2	KCORE2	2	CORE2	8.30586E+17	2.14378E+17	4.37978E+17	4.75955E-03	3.11629E-03	8.04328E-04	1.64326E-03
3	KCOR3I	3	CRIN3	2.63661E+17	1.25857E+17	1.41423E+17	4.78754E-03	3.11611E-03	1.48745E-03	1.67142E-03
4	KCOR3O	4	CROT3	6.01134E+17	1.81307E+17	2.63732E+17	5.52696E-03	3.84157E-03	1.15865E-03	1.68539E-03
5	KCORE4	5	CORE4	1.61047E+18	4.79419E+17	7.14383E+17	5.52074E-03	3.82432E-03	1.13846E-03	1.69642E-03
6	KCORE5	6	CORE5	1.46845E+18	6.68835E+17	5.96786E+17	5.65730E-03	4.02252E-03	1.83214E-03	1.63478E-03
7	KTYPEB	7	TYPEB	-3.71639E+16	-2.01943E+16	8.45775E+16	7.97161E-04	-6.24835E-04	-3.39526E-04	1.42200E-03
8	KTYPEC	8	TYPEC	2.22065E+16	-5.26364E+15	1.21033E+17	1.78297E-03	2.76415E-04	-6.55189E-05	1.50655E-03
9	KCMTYB	9	CMTYB	-3.61809E+16	-1.69908E+16	4.50138E+16	2.57372E-04	-1.05423E-03	-4.95074E-04	1.31160E-03
10	KINSLT	10	INSLT	1.11736E+17	3.75615E+16	-1.47041E+17	-8.14913E-04	2.57911E-03	8.67001E-04	-3.39402E-03
11	KLSLD	11	LSLD	3.96316E+17	1.28601E+17	-5.04477E+17	-4.39430E-04	1.61014E-03	5.22475E-04	-2.04957E-03
12	KUSLD	12	USLD	5.35962E+17	1.75663E+17	-7.34805E+17	-6.81706E-04	1.83747E-03	6.02237E-04	-2.51917E-03
13	KRSLDC	13	RSLDC	-1.90697E+18	-6.29840E+17	4.74612E+17	-1.83349E-03	-2.44101E-03	-8.06226E-04	6.07527E-04
14	KNTSLD	14	NTSLD	-1.78280E+18	-6.28034E+17	3.78105E+16	-3.11820E-02	-3.18576E-02	-1.12226E-02	6.75652E-04
15	KCRADP	15	CRADP	-1.37400E+16	-3.46054E+15	1.02803E+16	-2.05174E-04	-8.14831E-04	-2.05222E-04	6.09657E-04
16	KCRABS	16	CRABS	-2.01916E+18	-6.77327E+17	8.22680E+16	-1.87483E-02	-1.95446E-02	-6.55624E-03	7.96320E-04
17	KINUSD	21	INUSD	-6.67122E+15	-1.53086E+15	2.29385E+15	-1.10973E-03	-1.69126E-03	-3.88098E-04	5.81527E-04
18	KUCRDP	27	UCRDP	-7.55283E+15	-1.55153E+15	4.00221E+15	-1.77737E-04	-3.78080E-04	-7.76663E-05	2.00343E-04
	TOTALS			2.61373E+17	9.28631E+16	1.74734E+18	6.47491E-04	8.42512E-05	2.99336E-05	5.63239E-04

(4) BUCKLING = B**2 = LEAKAGE / (D*FLUX*VOLUME) 1/CM**2

REGION AND AREA BALANCE INTEGRALS FOR REAL K-EFF PROBLEM WITH ENERGY RANGE (EV) =(1.000E+00,1.000E+00)

REGION NO.	NAME	ZONE NO.	ZONE NAME	CAPTURE RATE	FISSION RATE	(N2,N) SOURCE	NET PRODUCTION(5)	MEDIAN ENERGY FISSION SRC.	MEDIAN ENERGY ABSORPTN RATE	MEDIAN ENERGY FLUX
1	KCORE1	1	CORE1	1.16798E+17	2.04410E+17	8.64427E+14	6.69757E+17	1.00000E+00	1.00000E+00	1.00000E+00
2	KCORE2	2	CORE2	4.08473E+17	7.36552E+17	3.33013E+15	2.41356E+18	1.00000E+00	1.00000E+00	1.00000E+00
3	KCOR3I	3	CRIN3	1.29353E+17	2.34714E+17	1.08494E+15	7.69142E+17	1.00000E+00	1.00000E+00	1.00000E+00
4	KCOR3O	4	CROT3	2.36899E+17	4.83966E+17	2.03129E+15	1.58572E+18	1.00000E+00	1.00000E+00	1.00000E+00
5	KCORE4	5	CORE4	6.69115E+17	1.31520E+18	5.40556E+15	4.30913E+18	1.00000E+00	1.00000E+00	1.00000E+00
6	KCORE5	6	CORE5	7.03384E+17	1.21654E+18	4.24721E+15	3.98514E+18	1.00000E+00	1.00000E+00	1.00000E+00
7	KTYPEB	7	TYPEB	4.68569E+16	4.14113E+16	1.58455E+14	1.35669E+17	1.00000E+00	1.00000E+00	1.00000E+00
8	KTYPEC	8	TYPEC	1.03931E+17	1.08585E+17	4.18874E+14	3.55742E+17	1.00000E+00	1.00000E+00	1.00000E+00
9	KCMTYB	9	CMTYB	1.35123E+16	9.81619E+15	3.98212E+13	3.21614E+16	1.00000E+00	1.00000E+00	1.00000E+00
10	KINSLT	10	INSLT	7.68227E+16	1.80752E+16	4.40102E+14	5.95879E+16	1.00000E+00	1.00000E+00	1.00000E+00
11	KLSLD	11	LSLD	1.08234E+17	0.00000E+00	1.04960E+13	1.04960E+13	0.00000E+00	1.00000E+00	1.00000E+00
12	KUSLD	12	USLD	1.98896E+17	0.00000E+00	1.24411E+13	1.24411E+13	0.00000E+00	1.00000E+00	1.00000E+00
13	KRSLDC	13	RSLDC	1.43233E+18	0.00000E+00	1.11684E+14	1.11684E+14	0.00000E+00	1.00000E+00	1.00000E+00
14	KNTSLD	14	NTSLD	1.74495E+18	0.00000E+00	1.84096E+11	1.84096E+11	0.00000E+00	1.00000E+00	1.00000E+00
15	KCRADP	15	CRADP	3.46651E+15	0.00000E+00	3.29984E+11	3.29984E+11	0.00000E+00	1.00000E+00	1.00000E+00
16	KCRABS	16	CRABS	1.93691E+18	0.00000E+00	5.37936E+12	5.37936E+12	0.00000E+00	1.00000E+00	1.00000E+00

17	KINUSD	21	INUSD	4.37711E+15	0.00000E+00	4.51670E+10	4.51670E+10	0.00000E+00	1.00000E+00	1.00000E+00
18	KUCRDP	27	UCRDP	3.55526E+15	0.00000E+00	1.72784E+11	1.72784E+11	0.00000E+00	1.00000E+00	1.00000E+00
	TOTALS			7.93787E+18	4.36927E+18	1.81615E+16	1.43158E+19	1.00000E+00	1.00000E+00	1.00000E+00

(5) NET PRODUCTION = FISSION PRODUCTION + (N,2N) SOURCE

REAL ZONE FLUX AVERAGES FOR K-EFF PROBLEM WITH ENERGY RANGE (EV) =(1.000E+00,1.000E+00)

ZONE NO.	ZONE NAME	VOLUME (CC)	AVG. TOTAL FLUX (NEUTRON/CM2-SEC)	GROUP 1	GROUP 2	GROUP 3	GROUP 4
1	CORE1	8.84009E+03	5.09257E+15	2.25618E+13	9.62517E+13	2.36375E+14	3.32862E+14
2	CORE2	3.53604E+04	4.65940E+15	2.18468E+13	9.31725E+13	2.27290E+14	3.18150E+14
3	CRIN3	1.17868E+04	4.42530E+15	2.13139E+13	9.09201E+13	2.20391E+14	3.06090E+14
4	CROT3	2.35736E+04	4.08571E+15	2.03736E+13	8.69233E+13	2.09750E+14	2.91332E+14
5	CORE4	7.07208E+04	3.69037E+15	1.81179E+13	7.73167E+13	1.86036E+14	2.58026E+14
6	CORE5	7.66142E+04	3.04259E+15	1.31332E+13	5.59760E+13	1.36316E+14	1.93231E+14
7	TYPEB	5.89340E+03	4.97332E+15	2.07653E+13	8.86381E+13	2.21534E+14	3.18209E+14
8	TYPEC	8.84009E+03	5.04841E+15	2.14601E+13	9.15455E+13	2.27583E+14	3.24670E+14
9	CMTYB	2.94670E+03	4.68639E+15	2.04252E+13	8.72182E+13	2.16104E+14	3.07606E+14
10	INSLT	1.16410E+04	2.44437E+15	8.04240E+12	3.41381E+13	8.78494E+13	1.30404E+14
11	LSLD	1.03808E+05	1.27293E+15	2.06147E+12	8.80268E+12	2.61592E+13	4.83280E+13
12	USLD	1.44848E+05	1.23403E+15	1.38459E+12	5.93581E+12	1.82806E+13	3.58366E+13
13	RSLDC	7.66435E+05	8.78121E+14	8.63292E+11	3.67357E+12	1.12789E+13	2.28563E+13
14	NTSLD	6.93440E+05	8.37354E+13	1.40010E+10	6.12997E+10	2.75905E+11	9.35185E+11
15	CRADP	6.63160E+03	1.07673E+15	1.60398E+12	6.83037E+12	2.07460E+13	4.05951E+13
16	CRABS	2.14764E+04	2.71619E+15	1.29619E+13	5.51049E+13	1.35879E+14	2.02068E+14
17	ENTNO	0.00000E+00	0.00000E+00	0.00000E+00	0.00000E+00	0.00000E+00	0.00000E+00
18	GASPL	0.00000E+00	0.00000E+00	0.00000E+00	0.00000E+00	0.00000E+00	0.00000E+00
19	HLHED	0.00000E+00	0.00000E+00	0.00000E+00	0.00000E+00	0.00000E+00	0.00000E+00
20	INLSD	0.00000E+00	0.00000E+00	0.00000E+00	0.00000E+00	0.00000E+00	0.00000E+00
21	INUSD	1.21640E+04	2.27102E+14	3.29125E+10	1.41114E+11	6.76100E+11	2.33307E+12
22	NLSLD	0.00000E+00	0.00000E+00	0.00000E+00	0.00000E+00	0.00000E+00	0.00000E+00
23	NGSPL	0.00000E+00	0.00000E+00	0.00000E+00	0.00000E+00	0.00000E+00	0.00000E+00
24	NHLHD	0.00000E+00	0.00000E+00	0.00000E+00	0.00000E+00	0.00000E+00	0.00000E+00
25	MTRIX	0.00000E+00	0.00000E+00	0.00000E+00	0.00000E+00	0.00000E+00	0.00000E+00
26	LCRDP	0.00000E+00	0.00000E+00	0.00000E+00	0.00000E+00	0.00000E+00	0.00000E+00
27	UCRDP	8.38880E+03	9.43148E+14	7.67134E+11	3.27259E+12	1.06165E+13	2.34644E+13
	TOTALS	2.01341E+06	1.03639E+15	2.89987E+12	1.23662E+13	3.15875E+13	4.87224E+13

REAL ZONE FLUX AVERAGES FOR K-EFF PROBLEM WITH ENERGY RANGE (EV) =(1.000E+00,1.000E+00)

ZONE NO.	ZONE NAME	GROUP 5	GROUP 6	GROUP 7	GROUP 8	GROUP 9	GROUP 10
1	CORE1	3.99137E+14	8.85115E+14	9.66059E+14	8.44338E+14	5.73899E+14	3.51943E+14
2	CORE2	3.78541E+14	8.22448E+14	8.96399E+14	7.66580E+14	5.13129E+14	3.07375E+14
3	CRIN3	3.63274E+14	7.81036E+14	8.47808E+14	7.20218E+14	4.82336E+14	2.91203E+14
4	CROT3	3.43898E+14	7.28064E+14	7.87954E+14	6.61494E+14	4.39140E+14	2.60196E+14
5	CORE4	3.05747E+14	6.50510E+14	7.01661E+14	5.92949E+14	4.02038E+14	2.43093E+14
6	CORE5	2.34883E+14	5.18220E+14	5.62850E+14	4.88400E+14	3.49200E+14	2.15286E+14
7	TYPEB	3.85361E+14	8.63477E+14	9.34612E+14	8.25513E+14	5.63663E+14	3.48377E+14
8	TYPEC	3.91123E+14	8.77213E+14	9.57142E+14	8.43096E+14	5.73282E+14	3.51099E+14
9	CMTYB	3.70539E+14	8.18528E+14	8.76249E+14	7.66267E+14	5.22572E+14	3.24333E+14
10	INSLT	1.61371E+14	3.95315E+14	4.44311E+14	4.06439E+14	2.97412E+14	1.89285E+14
11	LSLD	6.92121E+13	1.90694E+14	2.25707E+14	2.15451E+14	1.62219E+14	1.04877E+14
12	USLD	5.71671E+13	1.73842E+14	2.09444E+14	2.07869E+14	1.64591E+14	1.04930E+14

13	RSLDC	4.08680E+13	1.24229E+14	1.47556E+14	1.47967E+14	1.23067E+14	7.12239E+13
14	NTSLD	2.69668E+12	9.35481E+12	1.57743E+13	1.65473E+13	1.54192E+13	1.07128E+13
15	CRADP	5.88310E+13	1.63632E+14	1.94613E+14	1.87093E+14	1.38888E+14	8.83929E+13
16	CRABS	2.40467E+14	5.02661E+14	5.60382E+14	4.56340E+14	2.95123E+14	1.52604E+14
17	ENTNO	0.00000E+00	0.00000E+00	0.00000E+00	0.00000E+00	0.00000E+00	0.00000E+00
18	GASPL	0.00000E+00	0.00000E+00	0.00000E+00	0.00000E+00	0.00000E+00	0.00000E+00
19	HLHED	0.00000E+00	0.00000E+00	0.00000E+00	0.00000E+00	0.00000E+00	0.00000E+00
20	INLSD	0.00000E+00	0.00000E+00	0.00000E+00	0.00000E+00	0.00000E+00	0.00000E+00
21	INUSD	6.36028E+12	2.76714E+13	3.82526E+13	4.03541E+13	3.44956E+13	2.01457E+13
22	NLSLD	0.00000E+00	0.00000E+00	0.00000E+00	0.00000E+00	0.00000E+00	0.00000E+00
23	NGSPL	0.00000E+00	0.00000E+00	0.00000E+00	0.00000E+00	0.00000E+00	0.00000E+00
24	NHLHD	0.00000E+00	0.00000E+00	0.00000E+00	0.00000E+00	0.00000E+00	0.00000E+00
25	MTRIX	0.00000E+00	0.00000E+00	0.00000E+00	0.00000E+00	0.00000E+00	0.00000E+00
26	LCRDP	0.00000E+00	0.00000E+00	0.00000E+00	0.00000E+00	0.00000E+00	0.00000E+00
27	UCRDP	3.97792E+13	1.27717E+14	1.62499E+14	1.62543E+14	1.29487E+14	8.28737E+13
	TOTALS	6.56812E+13	1.63308E+14	1.86860E+14	1.72625E+14	1.30273E+14	7.86998E+13

REAL ZONE FLUX AVERAGES FOR K-EFF PROBLEM WITH ENERGY RANGE (EV) =(1.000E+00,1.000E+00)

ZONE NO.	ZONE NAME	GROUP 11	GROUP 12	GROUP 13	GROUP 14	GROUP 15	GROUP 16
1	CORE1	1.87088E+14	9.99318E+13	3.32650E+13	4.62242E+13	1.38650E+13	2.63516E+12
2	CORE2	1.58915E+14	8.18630E+13	2.67499E+13	3.43275E+13	1.00177E+13	1.85602E+12
3	CRIN3	1.51639E+14	7.84719E+13	2.57526E+13	3.28250E+13	9.51679E+12	1.77546E+12
4	CROT3	1.32293E+14	6.67143E+13	2.15673E+13	2.63616E+13	7.64609E+12	1.41075E+12
5	CORE4	1.25402E+14	6.60680E+13	2.20352E+13	2.91148E+13	9.46886E+12	1.94323E+12
6	CORE5	1.13285E+14	6.83946E+13	2.65887E+13	4.11438E+13	1.71613E+13	5.08222E+12
7	TYPEB	1.88353E+14	1.03213E+14	3.59785E+13	5.41502E+13	1.65425E+13	3.44393E+12
8	TYPEC	1.87270E+14	1.00232E+14	3.33817E+13	4.99952E+13	1.50696E+13	3.00436E+12
9	CMTYB	1.77001E+14	9.59007E+13	3.35383E+13	5.00617E+13	1.52734E+13	3.24256E+12
10	INSLT	1.04482E+14	6.32961E+13	2.54569E+13	4.93297E+13	2.52104E+13	1.01254E+13
11	LSLD	5.96750E+13	3.88987E+13	1.65692E+13	4.41637E+13	2.76018E+13	1.37513E+13
12	USLD	5.95514E+13	4.10146E+13	2.09532E+13	5.12360E+13	3.41138E+13	1.74273E+13
13	RSLDC	3.92498E+13	3.23484E+13	2.11527E+13	3.69050E+13	2.45069E+13	1.27689E+13
14	NTSLD	5.97339E+12	3.17467E+12	1.16876E+12	9.61513E+11	4.33071E+11	1.36528E+11
15	CRADP	4.81924E+13	2.99857E+13	1.11594E+13	3.69191E+13	2.24619E+13	1.10474E+13
16	CRABS	6.24021E+13	2.47955E+13	5.70121E+12	6.93476E+12	2.09909E+12	4.15518E+11
17	ENTNO	0.00000E+00	0.00000E+00	0.00000E+00	0.00000E+00	0.00000E+00	0.00000E+00
18	GASPL	0.00000E+00	0.00000E+00	0.00000E+00	0.00000E+00	0.00000E+00	0.00000E+00
19	HLHED	0.00000E+00	0.00000E+00	0.00000E+00	0.00000E+00	0.00000E+00	0.00000E+00
20	INLSD	0.00000E+00	0.00000E+00	0.00000E+00	0.00000E+00	0.00000E+00	0.00000E+00
21	INUSD	1.09127E+13	8.20984E+12	4.24327E+12	1.17629E+13	8.66086E+12	4.67466E+12
22	NLSLD	0.00000E+00	0.00000E+00	0.00000E+00	0.00000E+00	0.00000E+00	0.00000E+00
23	NGSPL	0.00000E+00	0.00000E+00	0.00000E+00	0.00000E+00	0.00000E+00	0.00000E+00
24	NHLHD	0.00000E+00	0.00000E+00	0.00000E+00	0.00000E+00	0.00000E+00	0.00000E+00
25	MTRIX	0.00000E+00	0.00000E+00	0.00000E+00	0.00000E+00	0.00000E+00	0.00000E+00
26	LCRDP	0.00000E+00	0.00000E+00	0.00000E+00	0.00000E+00	0.00000E+00	0.00000E+00
27	UCRDP	4.58036E+13	2.97211E+13	1.16769E+13	4.24938E+13	2.86485E+13	1.47346E+13
	TOTALS	4.24416E+13	2.81889E+13	1.42412E+13	2.54177E+13	1.52738E+13	7.42019E+12

REAL ZONE FLUX AVERAGES FOR K-EFF PROBLEM WITH ENERGY RANGE (EV) =(1.000E+00,1.000E+00)

ZONE NO.	ZONE NAME	GROUP 17	GROUP 18
1	CORE1	7.22097E+11	3.00246E+11

2	CORE2	5.16165E+11	2.27955E+11
3	CRIN3	5.01676E+11	2.22359E+11
4	CROT3	4.05279E+11	1.81646E+11
5	CORE4	5.96876E+11	2.45778E+11
6	CORE5	2.27763E+12	1.15949E+12
7	TYPEB	1.01324E+12	4.76761E+11
8	TYPEC	8.53616E+11	3.90666E+11
9	CMTYB	1.00517E+12	5.25301E+11
10	INSLT	6.33350E+12	5.56943E+12
11	LSLD	9.62980E+12	9.13000E+12
12	USLD	1.42624E+13	1.61893E+13
13	RSLDC	9.09308E+12	8.51385E+12
14	NTSLD	6.20251E+10	3.39265E+10
15	CRADP	7.93240E+12	7.31007E+12
16	CRABS	1.71802E+11	8.28047E+10
17	ENTNO	0.00000E+00	0.00000E+00
18	GASPL	0.00000E+00	0.00000E+00
19	HLHED	0.00000E+00	0.00000E+00
20	INLSD	0.00000E+00	0.00000E+00
21	INUSD	3.77945E+12	4.39577E+12
22	NLSLD	0.00000E+00	0.00000E+00
23	NGSPL	0.00000E+00	0.00000E+00
24	NHLHD	0.00000E+00	0.00000E+00
25	MTRIX	0.00000E+00	0.00000E+00
26	LCRDP	0.00000E+00	0.00000E+00
27	UCRDP	1.23301E+13	1.47193E+13
	TOTALS	5.27986E+12	5.10010E+12

付録6　中性子束計算モジュール実行のための大型計算機用ＪＣＬ例

ロードモジュール作成用ＪＣＬ例

（ソースプログラムのコンパイルとリンケージ）

ロードモジュールの実行例

ロードモジュール作成用ＪＣＬ例

（ソースプログラムのコンパイルとリンケージ）

```
//POF1P13C JOB (),VSFORT,MSGCLASS=X,NOTIFY=POF1P13,                    00000010
//     MSGLEVEL=(1,1),CLASS=A                                          00020003
//*
//*                          CL
//*
//FORT EXEC FORTECL,PARM.FORT='OPT(B),NOSTATIS'
//FORT.SYSPRINT DD SYSOUT=*
//FORT.SYSIN    DD DSN=POF1P13.VSNEW.FORT(V1FORT),
//     DISP=SHR,LABEL=(,,,IN)
//LKED.SYSLMOD  DD DSN=POF1P13.VSNEW.LOAD,DISP=SHR
//LKED.SYSPRINT DD SYSOUT=*
//LKED.SYSIN    DD *
 ENTRY    MAIN
 NAME     VSLM02
/*
//
//* VSLM01   MAXBLK= 2500000 WORDS (CLASS=B) TOT.LENGTH=20592384
//* VSLM02   MAXBLK= 7000000 WORDS (CLASS=D) TOT.LENGTH=56592384
//*          MAXBLK=12000000 WORDS (CLASS= ) TOT.LENGTH=96592384
//*          MAXBLK= 9500000 WORDS (CLASS= ) TOT.LENGTH=76592384
//*          MAXBLK= 6100000 WORDS (CLASS=D) TOT.LENGTH=49392384
```

ロードモジュールの実行例

```
1     //POF1P    JOB (),VSFORT,MSGCLASS=X,NOTIFY=POF1P13,
      //     MSGLEVEL=(1,1),CLASS=D
      ***
      ***                    GO
      ***
2     //VSRUN EXEC PGM=VSLMX2
3     //STEPLIB DD DSN=POF1P13.VSNEW.LOAD2,DISP=SHR,LABEL=(,,,IN)
      ***
      ***   INPUT DATA
4     //FT05F001 DD DSN=POF1P13.VSNEW.DATA(S09INP),DISP=SHR
      ***   PRINTED OUTLIST
5     //FT06F001 DD SYSOUT=*
      ***   INPUT FILE
6     //FT07F001 DD UNIT=SYSDA,DSN=POF1P13.@VSNEW.INP7,
      //          DISP=(MOD,PASS)
7     //FT07F002 DD DSN=POF1P13.@VSNEW.INP7,DISP=(SHR,PASS)
8     //FT07F003 DD DSN=POF1P13.@VSNEW.INP7,DISP=(SHR,PASS)
9     //FT07F004 DD DSN=POF1P13.@VSNEW.INP7,DISP=(SHR,PASS)
10    //FT07F005 DD DSN=POF1P13.@VSNEW.INP7,DISP=(SHR,PASS)
11    //FT07F006 DD DSN=POF1P13.@VSNEW.INP7,DISP=(SHR,PASS)
12    //FT07F007 DD DSN=POF1P13.@VSNEW.INP7,DISP=(SHR,PASS)
13    //FT07F008 DD DSN=POF1P13.@VSNEW.INP7,DISP=(SHR,PASS)
14    //FT07F009 DD DSN=POF1P13.@VSNEW.INP7,DISP=(SHR,PASS)
15    //FT07F010 DD DSN=POF1P13.@VSNEW.INP7,DISP=(SHR,PASS)
16    //FT07F011 DD DSN=POF1P13.@VSNEW.INP7,DISP=(SHR,PASS)
17    //FT07F012 DD DSN=POF1P13.@VSNEW.INP7,DISP=(SHR,PASS)
18    //FT07F013 DD DSN=POF1P13.@VSNEW.INP7,DISP=(SHR,PASS)
19    //FT07F014 DD DSN=POF1P13.@VSNEW.INP7,DISP=(SHR,PASS)
20    //FT07F015 DD DSN=POF1P13.@VSNEW.INP7,DISP=(SHR,PASS)
21    //FT07F016 DD DSN=POF1P13.@VSNEW.INP7,DISP=(SHR,PASS)
22    //FT07F017 DD DSN=POF1P13.@VSNEW.INP7,DISP=(SHR,PASS)
23    //FT07F018 DD DSN=POF1P13.@VSNEW.INP7,DISP=(SHR,PASS)
24    //FT07F019 DD DSN=POF1P13.@VSNEW.INP7,DISP=(SHR,PASS)
25    //FT07F020 DD DSN=POF1P13.@VSNEW.INP7,DISP=(SHR,PASS)
26    //FT07F021 DD DSN=POF1P13.@VSNEW.INP7,DISP=(SHR,PASS)
27    //FT07F022 DD DSN=POF1P13.@VSNEW.INP7,DISP=(SHR,PASS)
28    //FT07F023 DD DSN=POF1P13.@VSNEW.INP7,DISP=(SHR,PASS)
29    //FT07F024 DD DSN=POF1P13.@VSNEW.INP7,DISP=(SHR,PASS)
30    //FT07F025 DD DSN=POF1P13.@VSNEW.INP7,DISP=(SHR,PASS)
31    //FT07F026 DD DSN=POF1P13.@VSNEW.INP7,DISP=(SHR,PASS)
32    //FT07F027 DD DSN=POF1P13.@VSNEW.INP7,DISP=(SHR,PASS)
33    //FT07F028 DD DSN=POF1P13.@VSNEW.INP7,DISP=(SHR,PASS)
34    //FT07F029 DD DSN=POF1P13.@VSNEW.INP7,DISP=(SHR,PASS)
35    //FT07F030 DD DSN=POF1P13.@VSNEW.INP7,DISP=(SHR,PASS)
36    //FT07F031 DD DSN=POF1P13.@VSNEW.INP7,DISP=(SHR,PASS)
37    //FT07F032 DD DSN=POF1P13.@VSNEW.INP7,DISP=(SHR,PASS)
      ***   MXSBIN(MACROSCOPIC CROSS-SECTION)
38    //FT19F001 DD UNIT=WORK,DSN=&&MXSFIL,
      //          SPACE=(TRK,(50,50)),
      //          DCB=(RECFM=VBS,LRECL=X,BLKSIZE=6136),
      //          DISP=NEW
      ***   LABBIN(LABEL & AREA DEFINITIONS)
39    //FT20F001 DD UNIT=WORK,DSN=&&LABFIL,
      //          SPACE=(TRK,(10,10)),
      //          DCB=(RECFM=VBS,LRECL=X,BLKSIZE=6136),
      //          DISP=NEW
      ***   GEOBIN(GEOMETRY DESCRIPTION)
40    //FT26F001 DD UNIT=WORK,DSN=&&GEOFIL,
      //          SPACE=(TRK,(50,50)),
      //          DCB=(RECFM=VBS,LRECL=X,BLKSIZE=6136),
      //          DISP=NEW
      ***
      ***   RTFLUX(REAL FLUX)
41    //FT30F001 DD UNIT=WORK,DSN=&&FLUX30,
      //          SPACE=(CYL,(200,100)),DISP=NEW,
      //          DCB=(RECFM=VBS,LRECL=X,BLKSIZE=6136)
      ***
      ***
      ***
42    //FT41F001 DD UNIT=WORK,DSN=&&PSI41,
      //          SPACE=(CYL,(50,20)),
      //          DCB=(RECFM=VBS,LRECL=X,BLKSIZE=6136),
      //          DISP=NEW
43    //FT42F001 DD UNIT=WORK,DSN=&&PSI42,
      //          SPACE=(CYL,(50,20)),
      //          DCB=(RECFM=VBS,LRECL=X,BLKSIZE=6136),
      //          DISP=NEW
44    //FT45F001 DD UNIT=WORK,DSN=&&FDC45,
      //          SPACE=(CYL,(200,100)),
      //          DCB=(RECFM=VBS,LRECL=X,BLKSIZE=6136),
      //          DISP=NEW
45    //FT48F001 DD UNIT=WORK,DSN=&&FRNM48,
      //          SPACE=(CYL,(50,20)),
      //          DCB=(RECFM=VBS,LRECL=X,BLKSIZE=6136),
      //          DISP=NEW
```

```
46      //FT49F001 DD UNIT=WORK,DSN=&&FRNM49,
        //         SPACE=(CYL,(50,20)),
        //         DCB=(RECFM=VBS,LRECL=X,BLKSIZE=6136),
        //         DISP=NEW
47      //FT53F001 DD UNIT=WORK,DSN=&&CXS53,
        //         SPACE=(CYL,(10,10)),
        //         DCB=(RECFM=VBS,LRECL=X,BLKSIZE=32760),
        //         DISP=NEW
```