TN 841－77－57

本資料は　年　月　日付けで登録区分、
変更する。 2001. 6. -6
[技術情報室]

ペレットスタック長調整用計算コード

A computor code for selecting fuel Pellets
to make a specified stack－length

1977年10月

動力炉・核燃料開発事業団

東　海　事　業　所

本資料の全部または一部を複写・複製・転載する場合は、下記にお問い合わせください。

〒319-1184　茨城県那珂郡東海村大字村松4番地49
核燃料サイクル開発機構
技術展開部　技術協力課

Inquiries about copyright and reproduction should be addressed to:
Technical Cooperation Section,
Technology Management Division,
Japan Nuclear Cycle Development Institute
4-49 Muramatsu, Tokai-mura, Naka-gun, Ibaraki, 319-1184
Japan

© 核燃料サイクル開発機構 (Japan Nuclear Cycle Development Institute)
2001

Ⓤ

TN841－77－57

1977年10月28日

登録区分
2006.6.6
変更表示

ペレットスタック調整計算

A computor code for selecting fuel pellets to make a specified stack－length

実施責任者　本田　裕
（プルトニウム燃料部開発課）

報告者　佐々木　進
落合洋治
鹿島貞光

目的　従来，手作業で実施していたペレット検査結果のデータ整理とスタック長調整の作業を計算機を使って実施することによって，作業の能率向上と正確化をはかる。

要旨　本計算コードCOSTACKは，ペレット検査データを整理し，スペックに対する合否を判定するメインプログラムと，合格ペレットについて，組み合わせを変えてスタック長の調整を実施するサブプログラムから成り立っている。

スタック長調整サブプログラムはSTACK－I～STACK－Ⅲの三種類あり，用途に応じて任意に選ぶことができる。

STACK－Iはペレット総数が多く（500～2,000）長尺ピンのスタック長を調整する場合に適している。

STACK－Ⅱはペレット総数が少く（500個以下）短尺ピンのスタック長を調整する場合に適している。

STACK－ⅢはSTACK－Ⅱを改良したもので，試行組み合せ数が多い。

本計算コードによって，ペレット検査－スペック判定－合格ペレットのスタック長調整という一連の工程の作業能率が大きく向上した。

N841—77—57

目　　次

まえがき …… 1

Ⅰ 計算概要 …… 2

Ⅱ フローチャート …… 15

Ⅲ 入力形式 …… 21

Ⅳ 出力形式 …… 22

Ⅴ 計算例 …… 23

Ⅵ 評価および考察 …… 76

Ⅶ まとめ …… 78

付録

計算コードリスト

まえがき

開発課試料係で製造する燃料ピンは照射試験用である為に短尺であり，ピン本数が少く，製造ペレット数も少ない。

その為にある限られた個数のペレットを並べてスタック長を仕様内に入れる際に次のような作業工程上の問題点があった。

(1) スタック長調整の為，すべてのペレットの組み合せを人間が試行錯誤するのは，ほとんど不可能に近い。

（例えば120ケのペレットから10ケづつペレットを選んで10本のピンを作る組合せ数は～10^{14}通りある。）

(2) 従って，往々にしてスタック長調整ができないケースがあり，その際には，一つ，ひとつペレットについて研マ紙上で削り落してスタック長を調整する作業が伴なった。

(3) 硬いペレット端面を，手作業で削ることは相当の時間がかかり，被曝量が増大するばかりでなく，グローブ先端が研マ紙によってすりキズができ，作業後にグローブ交換をしなければならなかった。

(4) また研マすると，ペレット研マ紙の不純物および削り屑が付着するために，ペレットを超音波洗浄，乾燥する工程が必要であった。

そこで，製造ペレット全ての寸法および密度のデータ整理と仕様に対する合否判定を実施するとともに，ペレットを研磨してスタック長の調整をするのでなく，焼き上りのままでペレット一ケ一ケの組み合せを変えることによってスタック長が仕様内に入るようなペレットの組み合わせを，必要とする全ピンについて見つけ出すようなコンピューターコードを開発した。

I. 計 算 概 要

I−1 MAIN PROGRAM

SUBROUTIN PROGRAM（スタック調整用）にスペック合格ペレットデーターを受け渡すために密度計算とペレット寸法，密度のスペック合否を判定させる。

アウトプットデーターとしてはインプットデーターであるペレットナンバー，直径，高さ，重量と計算結果の密度，そして直径が，スペックインなら○印，アウトなら×印，密度もスペックインなら○印，アウトなら×印が印刷される。

1）密度計算

開発課試料係が製造するペレット形状は，多種多様ありデイシュペレット，チャンファペレット，中空ペレット等は，体積を補正しなければならない。

この体積補正係数を△Vとして，

直径は，2点測定（X−軸，Y−軸）D_X，D_Y，高さをH，重量W，理論密度をCとすると，

① 直径，高さの単位は〔mm〕で読まれているから，直径の平均値$\overline{D}$と体積Vは，次の式となる。

$$\overline{D} = \{ (D_X, D_Y) / 2 \} \times \frac{1}{10} \qquad [cm]$$

$$V = \frac{\pi}{40} (\overline{D})^2 H \qquad [cm^3]$$

② 補正した体積V′は（円柱状なら△V ＝0）

$$V' = V - \triangle V \qquad [cm^3]$$

③ ペレット密度ρと理論密度ρ，T，Dは

$$\rho = W / V' \qquad [g/cc]$$

$$\rho_{TD} = 100\rho / C$$

2）標準偏差計算

平均値M，分散V，Nをペレット個数，とすると標準偏差SQは，

$$M = \frac{\sum_{i=1}^{N} Xi}{N}$$

$$V = \frac{1}{N-1} \left(\sum_{i=1}^{N} Xi^2 - NM^2 \right)$$

$$SQ = \sqrt{V}$$

以上の式で計算した。

I－2　サブルーチンプログラム

メインプログラムで合格と判定されたペレット個々の径，高さおよび密度のデータはすべてサブプログラムに受渡される。

サブプログラムでは，個々のペレットの組み合わせをいろいろ変えることによって，出来るだけ多くのピンがスタック長の仕様の範囲内に入るような組み合わせを繰り返し計算によって見つけ出す。

以下にSTACK－I，STACK－II，STACK－IIIのサブルーチンプログラムについて，スタック調整時の組み合わせ方法について説明する。

I－2－1　STACK－I

スタック長仕様をL±△Lとし，ピン中の高さのデータ配列を（K，J）で表わす。ここでK＝ピン中のペレットの順番，J＝ピンの番号とする。

図－I－1に示したように，合格ペレット個数が15ケ（i番目のペレットの高さをNi）ある場合を例にとれば，次の①～⑦までの手順で組み合わせを変え全てのピンがスペーク仕様に入るような組み合せを見つけ出す。

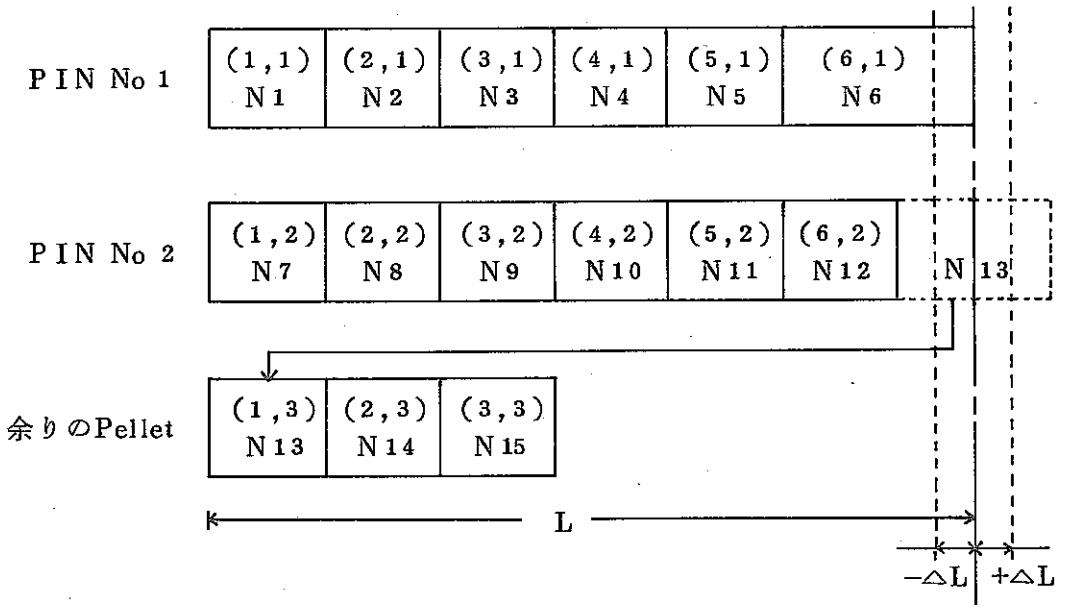

〔図－I－1〕

① ピンNo 1の（1，1）番地には，最初のペレットの高さN1を記憶する。同時にペレットナンバー，ペレット径重量，密度データも変数名の異なる同番地（1，1）に記憶する。次に（2，1）番地には二番目のペレットのデータが記憶される。

そして，$\sum_{i=1}^{i_1} Ni \geq L-\triangle L$を満たすi番目まで次々にペレットデータがピンNo 1の番地（k，1）に記憶される。

次にピンNo 2へ移り，ピンNo 1と同様に実行する。

（図－I－1）に示したように $\sum_{i=i_1+1}^{i_2-1} Ni < L-\triangle L$ かつ $\sum_{i=i_1+1}^{i_2} Ni > L+\triangle L$ のような場合には，i_2 番目のペレットは次のピンに入れられる。

j番目のピンに入った最初のペレットから最終ペレットまでの総和がスタック長下限値に満たない場合にはそれらのペレットは余りペレットとして記憶される。

ピンNo 1，ピンNo 2共にスタック長がL±△Lのスペークに入ったなら，計算終了であるが（図－I－1）に示したようにピンNo1はスペック長スペック内にあり合格，ピンNo 2はスペック以下で不合格であるような場合には，次の②の操作を行う。

② PIN No 2のペレットと，余りのペレット間での入れ替えを行う。

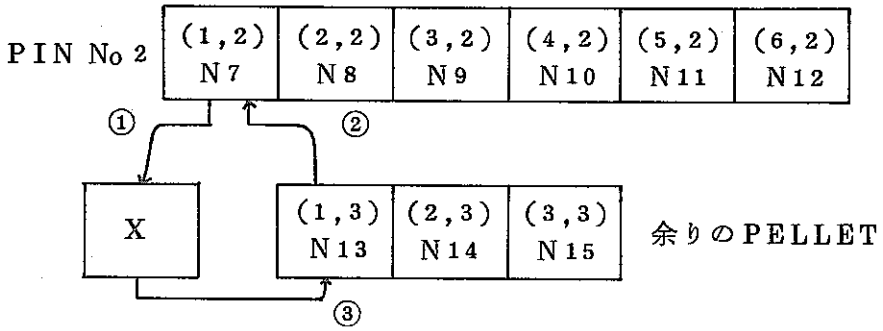

〔図－I－2〕

図〔I－2〕は，

番地（1，2）にペレットN 7の高さのDATAが入っている
〔（1，2）＝N7〕

それをX番地に記憶させる　〔X＝N7〕

番地（1，3）のペレットN13の高さのDATAを番地（1，2）に入れ替える　〔（1，2）＝N13〕

番地Xを番地（1，3）に入れ替える　〔（1，3）＝X＝N7〕

終了結果を図〔I－3〕に示す。

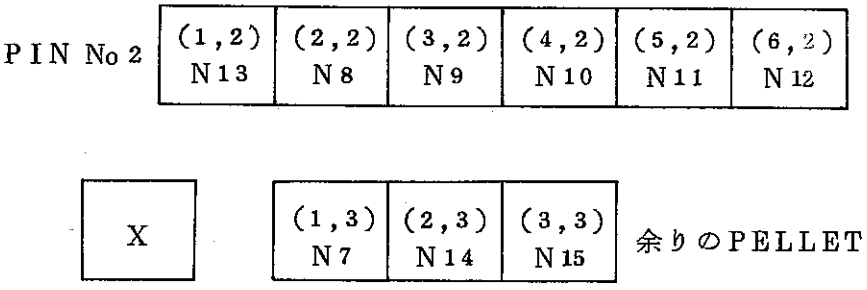

〔図－I－3〕

もし，この入え替えでPIN2のスタック長さが，L±△Lスペックに入ったなら計算終了，ペレット番号の若い順に並べかえ（PIN No 1では，ペレット番号1,2,3,4,5,6，PIN No 2では8,9,10,11,12,13の順となる），アウトプット（もう1本分PINを作くるだけのペレット個数がないため）するが，この入れ替えをしてもピンNo 2のスタック長がスペックに入らなかったときは，

③ 元の状態に戻してやる。図〔Ⅰ—4〕および図〔Ⅰ—5〕

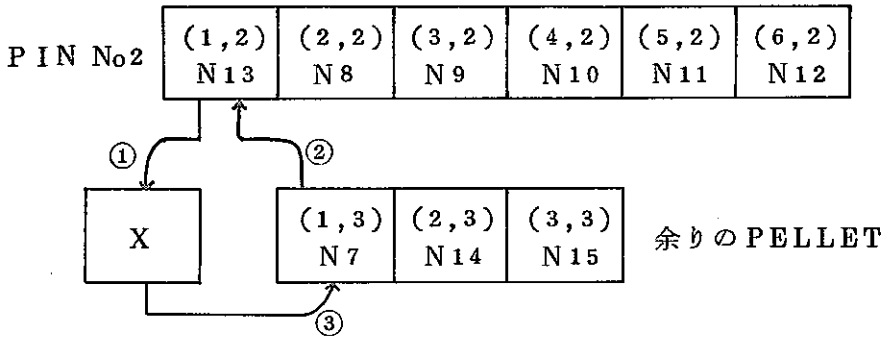

〔図—Ⅰ—4〕

図〔Ⅰ—4〕この入れ替えは，②と同様であり，その終了結果を図〔Ⅰ—5〕に示す。

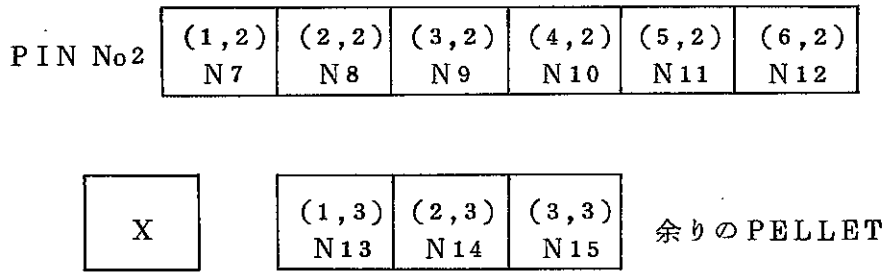

〔図—Ⅰ—5〕

④ 次に二番目のペレット（2，2）と余りのペレット（1，3）の入れ替えを行う。図〔Ⅰ—6〕

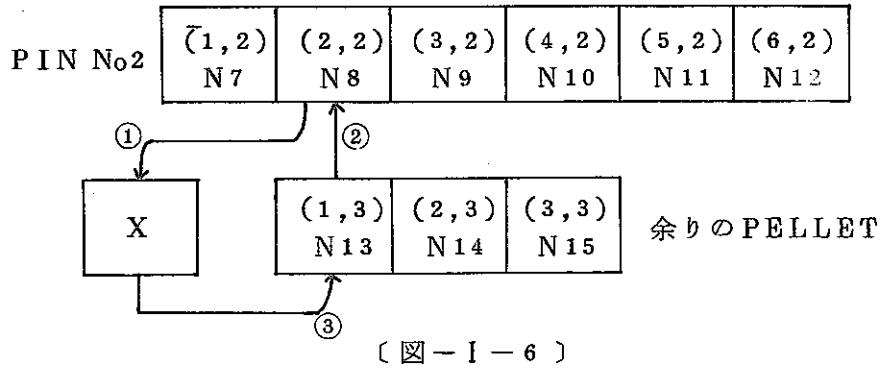

〔図—Ⅰ—6〕

入れ替えた結果を図〔Ⅰ—7〕に示す。

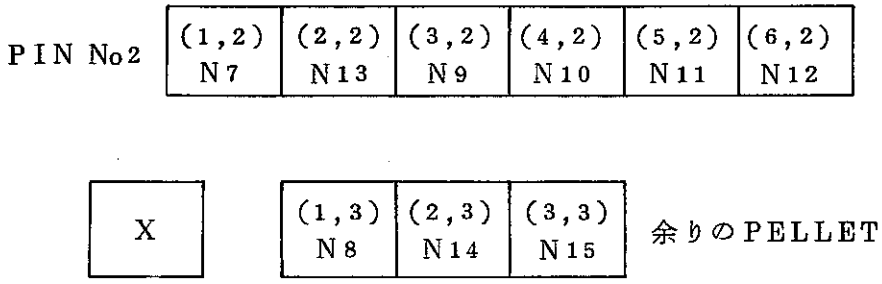

〔図—Ⅰ—7〕

この様に，PIN No2のスタック長さがL±△Lスペックに入るまで以下の様に入れ替えを行う。

Ⓐ 1 番地(2,2)=N13　番地(1,3)=N8　表〔Ⅰ—7〕状態
　 2 番地(2,2)=N8　番地(1,3)=N13

Ⓑ 1 番地(3,2)=N13　番地(1,3)=N9
　 2 番地(3,2)=N9　番地(1,3)=N13

Ⓒ 1 番地(4,2)=N13　番地(1,3)=N10
　 2 番地(4,2)=N10　番地(1,3)=N13

Ⓓ 1 番地(5,2)=N13　番地(1,3)=N11
　 2 番地(5,2)=N11　番地(1,3)=N13

Ⓔ 1 番地(6,2)=N13　番地(1,3)=N12
　 2 番地(6,2)=N12　番地(1,3)=N13

Ⓔ—2の結果は，図〔Ⅰ—1〕と同じである。

この入れ替え操作をしてもスペックに入らない場合には，

⑤ 次に，(1,2)と(2,3)の入れ替えを行う。図〔Ⅰ—8〕に示す。

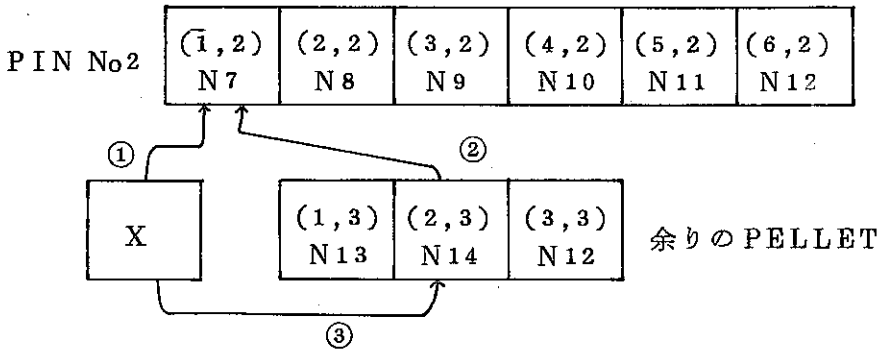

〔図—Ⅰ—8〕

以下は前と同じ手順で行う。番地（2，3）と，番地（1，2），（2，2）……（6，2），入れ替えた結果スタック長がL＋△L範囲外だったら，番地（3，3）と番地（1，2），（2，2）……（6，2）の入れ替えを行う。

（もし余りのペレットが（x，3）まである場合は，（x，3）のペレット入れ替えまで行う。（ここでxは $\sum_{i=1}^{x} Ni < L - \triangle L$））それでもL±△L範囲外だったら，

⑥　ペレットの順番をずらして（図〔I—9〕）

PIN No1	(1,1) N2	(2,1) N3	(3,1) N4	(4,1) N5	(5,1) N6	(6,1) N7

PIN No2	(1,2) N8	(2,2) N9	(3,2) N10	(4,2) N11	(5,2) N12	(6,2) N13

余りのPellet	(1,3) N14	(2,3) N15	(3,3) N1

〔図—I—9〕

（（1，1）にあったN1を（3，3）に移し，一個づつペレットをつめた。）

①～⑤までの計算を行う。それでもいづれかのピンのスタック長がスペックアウトだったらずらし，①～⑤の計算を行う。

PIN No1	(1,1) N3	(2,1) N4	(3,1) N5	(4,1) N6	(5,1) N7	(6,1) N8

PIN No2	(1,2) N9	(2,2) N10	(3,2) N11	(4,3) N12	(5,2) N13	(6,2) N14

余りのPellet	(1,3) N15	(2,3) N1	(3,3) N2

〔図—I—10〕

まだスタック長スペックに入らないときは，

番地（1，1）N3 を番地（3，3）へずらし，①～⑤までの計算を行う。

番地（1，1）N4 を番地（3，3）へ　　〃

番地（1，1）N5 を番地（3，3）へ　　〃

番地（1，1）N6 を番地（3，3）へ　　〃

⑦　それでもまだスタック長スペックに入らない時は，

④での PIN No1，PIN No2 のペレット高さの最小ペレット（N1～N12の中での最小値）と余りのペレットの最大ペレットを入れかえ①～⑥の計算をくり返えす，最大値，最小値の入れ替えを6回，即ち PIN 1本分に相当するペレット個数分だけ行ない，そのつど①～⑥の操作をくり返す。

以上①～⑦の組み合わせを変える操作を実施しても全部のピンがスタック長仕様の範囲内に入らない場合には，その旨印刷される。

I－2－2　STACK－Ⅱ

STACK－Ⅱと同じ様にスタック長調整用ペレット15個（N1～N15）スタック長スペックをL±△Lとすると，STACK－Ⅱは，次の手順でスタック調整を実行する。

データ配列を（K.J.M）で表わす。

ここでK.JはSTACK－Iと同じように定義する

M＝1はよこ方向の組み合わせ，M＝2はたて方向の組み合わせ，M＝3はSTOREとする。

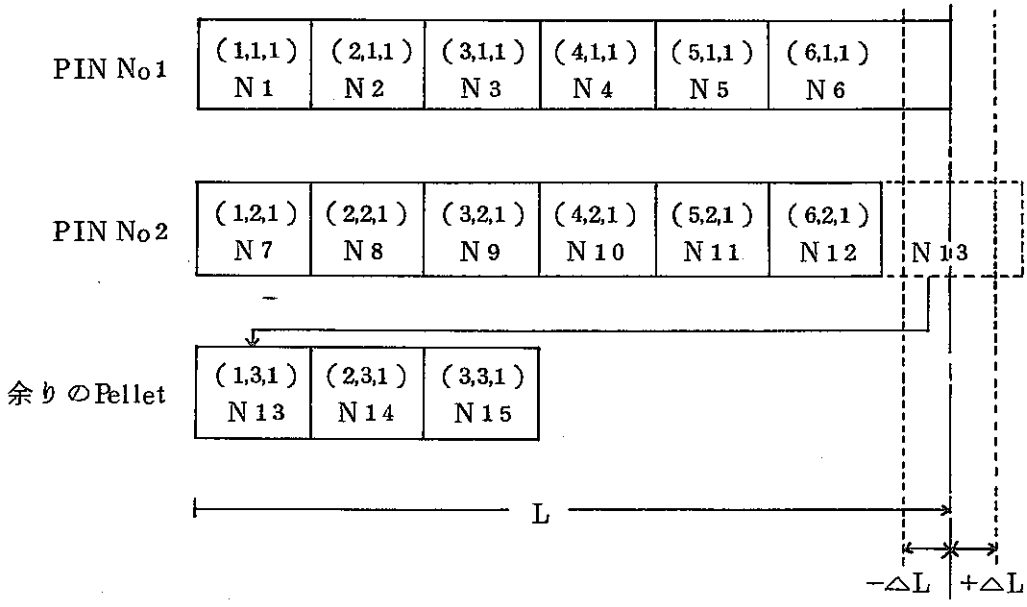

〔図－Ⅱ－I〕

①～⑤　STACK—Ⅱは番地が3次元になっただけで最初の入れ替え計算は前節Ⅰ—2—1での手順①～⑤までとまったく同じだから，その説明を省略する。

⑤までの入れ替え操作が終っても不合格ピンがある場合には⑥の操作を実施する。

⑥　図—Ⅱ—1のようにPIN No1のみ合格している場合には，1本合格と（B(1)=1）と記憶させる。

次に縦方向でペレットの組み合わせを行なわせる。図〔Ⅱ—1〕参照。

すなわち，PIN No1（1,1,2），（2,1,2），（3,1,2），（4,1,2），（5,1,2），（6,1,2）の番地に，〔図—Ⅱ—1〕での（1,1,1），（1,2,1），（1,3,1），（2,1,1），（2,2,1），（2,3,1）のペレットデータを，PIN No 2には（1,2,2），（2,2,2），（3,2,2），（4,2,2）（5,2,2），（6,2,2）の番地に〔図—Ⅱ—1〕での（3,1,1），（3,2,1），（3,3,1），（4,1,1），（4,2,1），（5,1,1）のペレットデータを余りのPELLET（1,3,3）（2,3,3）（3,3,3）の番地に，〔図—Ⅱ—1〕での（5,2,1）（6,1,1）（6,2,1）のペレットデータを記憶する。

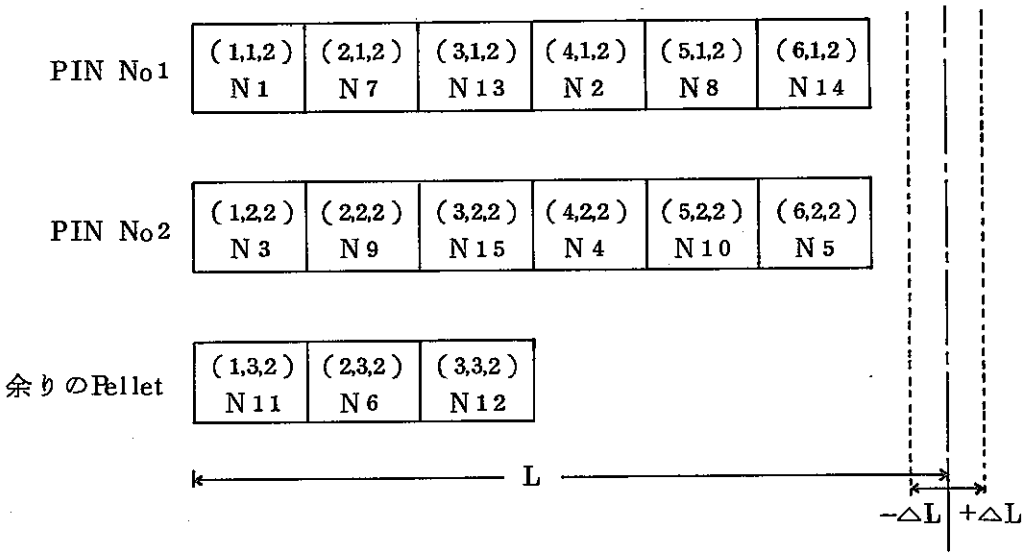

〔図—Ⅱ—2〕

〔図—Ⅱ—2〕のように，PIN No1，PIN No2，スタック長スペックアウトの場合には，まず，PIN No1に関してSTACK—Ⅰの①～⑤と同様な計算を行い，その次にPIN No2を同様に行う。もし，この入れ替えで合格PINがなかったとすると，0本合格とB(2)に記憶させる。（B(2)＝0）。

⑦　B(1)とB(2)を比較し，合格PIN本数の多い方の組み合わせのデータを，(J,K,3)に記憶させる。(J,K＝整数)

今　　B(1) ＞ B(2) だから

(1,1,3)＝N1

(2,1,3)＝N2

(3,1,3)＝N3

⋮

(3,3,3)＝N15　　となる

図〔Ⅱ—3〕参照。

合格PIN本数の多い組み合わせを記憶したから(J,K,1)(J,K,2)の番地は，クリアする。(J,K＝整数)

PIN No1	(1,1,3) N1	(2,1,3) N2	(3,1,3) N3	(4,1,3) N4	(5,1,3) N5	(6,1,3) N6
PIN No2	(1,2,3) N7	(2,2,3) N8	(3,2 3) N9	(4,2,3) N10	(5,2,3) N11	(6,2,3) N12
余りのPellet	(1,3,3) N13	(2,3,3) N14	(3,3,3) N15			

〔図—Ⅱ—3〕

⑧　前節Ⅰ—2—1での⑥と同様ペレットの順番をずらしてから本節①～⑦までの入れ替え操作を行う。

その結果，ヨコ方向での入れ替えで合格したピン数が1本(B(1)＝1)

タテ方向での入れ替えで合格したピン数が2本(B(2)＝2)とすればB(1)とB(2)を比較し，その多い方(B(2))と⑦で記憶したB(3)とを比較し，その多い方の組み合せのデータ(B(2))を(J,K,3)に入れ替える。

B(1) ＜ B(2)

B(3) ＜ B(2)

（1,1,2）のPELLET DATAを（1,1,3）に記憶させる。

（1,1,3）＝（1,1,2）

同様に，

（2,1,3）＝（2,1,2）

（3,1,3）＝（3,1,2）

（4 1,3）＝（4,1,2）

⋮

（3,3,3）＝（3,3,2）

二本分ピンが出来上ったので（全PIN）この結果をアウトプットする。

（なお，もしペレット順番をずらし終っても，二本分出来なかったとすると，合格PIN数の多いような組み合わせを，アウトプットする。）

以上のようにペレットの組み合わせを変えてスタック長を調整し，必要とする全ピンについてそのスタック長が合格したらその組み合わせ結果をアウトプットするが，全ピンについて合格しない場合には最も合格ピン数が多いような組合せ結果をアウトプットする。

I－2－3　STACK－Ⅲ

STACK－ⅢはSTACK－Ⅱを改良したもので，試行組み合わせ数が多くなっている。簡単な例として，ペレット数を5ケ，ピン1本当りのペレット数を2ケ，スタック長スペックをM±△Mとすれば，次のような手順でスタック長を調整する。

①～⑧

STACK－Ⅱ①～⑧と同じ（前節参照）

⑨，⑧までの入れ替え操作が終った段階で1本のピンだけがスタック長調整が出来たとすると，それ以外のペレット5ケ（不合格ピンペレット3ケ＋余りペレット2ケ）からピン1本分（3ケ）を作る全ての組み合わせ$_5C_3$＝10通りを試みる。

Ⓐ，Ⓑ，Ⓒ，Ⓓ，Ⓔ

Ⓐ－Ⓑ－Ⓒ	Ⓐ－Ⓓ－Ⓔ
Ⓐ－Ⓑ－Ⓓ	Ⓑ－Ⓒ－Ⓓ
Ⓐ－Ⓑ－Ⓔ	Ⓑ－Ⓒ－Ⓔ
Ⓐ－Ⓒ－Ⓓ	Ⓑ－Ⓓ－Ⓔ
Ⓐ－Ⓒ－Ⓔ	Ⓒ－Ⓓ－Ⓔ

〔図－Ⅲ－1〕

ⓘ （ペレット高さA）＋（ペレット高さB）。この計算結果をADDとすると，

ⓘⓘ 残りのペレット（C，D，E）の高さ（H）の最大値，最小値を求める。

（仮にC≦D≦Eとする）

$H_{MAX}=E$，$H_{MIN}=C$となる。

ⓘⓘⓘ $ADD+H_{MIN}=T1$

$ADD+H_{MAX}=T2$

ⓘⓥ T1，T2，は，スタック長スペックに対して，次の範囲の値をとる。

〔図−Ⅲ−2〕参照

ⓘⓥ−1……（$T_1>M+\triangle M$，$T_2>M+\triangle M$）

ⓘⓥ−2……（$T_1<M-\triangle M$，$T_2<M-\triangle M$）

ⓘⓥ−3……（$M-\triangle M\leqq T_1\leqq M+\triangle M$，$M-\triangle M\leqq T_2\leqq M+\triangle M$）

ⓘⓥ−4……（$T_1<M-\triangle M$，$T_2>M+\triangle M$）

ⓘⓥ−5……（$M-\triangle M\leqq T_1\leqq M+\triangle M$，$T_2>M+\triangle M$）

ⓘⓥ−6……（$T_1<M-\triangle M$，$M-\triangle M\leqq T_2\leqq M+\triangle M$）

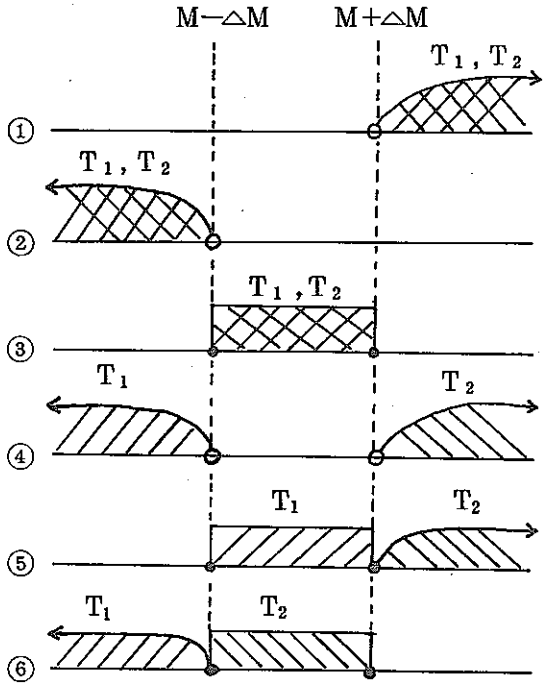

〔図−Ⅲ−2〕

→ もし，T_1，T_2 が ⓘⓥ－1，ⓘⓥ－2，の範囲なら，

ペレット高さの中間値である D＋ADD の計算を行なっても，スタック長スペックインは望めないから，次の組み合わせに移る。

次の手順は，Gō，Tō　　Ⓥ

→ T_1，T_2 が ⓘⓥ－3 の範囲なら，

T_1＝スペックイン

T_2＝スペックイン

だから，どちらかを選び，合格 PIN とする。

次の手順は，Gō　Tō　　ⓥⓘ

→ T_1，T_2 が ⓘⓥ －4 の範囲なら，H_{MAX} と H_{MIN} の中間値を持つ D のペレットを使えば，ADD4＋D で，スタック長スペックインの望みがある。

ADD4＋D の計算を行なう。この計算で，スタック長スペックインなら次の手順は，Gō Tō ⓥⓘ，違うなら Gō Tō Ⓥ

→ T_1，T_2 が ⓘⓥ－5 の範囲なら，

T_1 がスタック長スペックイン，T_2 がスペックアウトだから，

T_1 データを合格 PIN とする

次の手順は，Gō　Tō　　Ⓥ

→ T_1，T_2 が ⓘⓥ－6 の範囲なら，

T_1 がスタック長スペックアウト，T_2 がスペックインだから，

T_2 データを合格 PIN とする。

次の手順は，Gō Tō　　Ⓥ

以上，A－B－C，A－B－D，A－B－E の組み合わせを行なった

Ⓥ

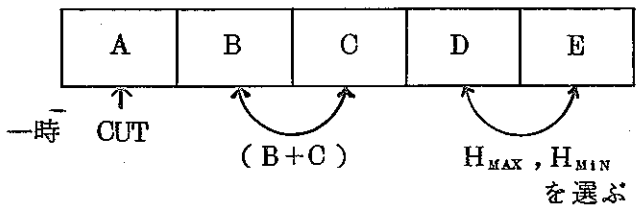

〔図－Ⅲ－3〕

次の組み合わせとして，A のペレットを 1 時カットし B＋C＝ADD，残りのペレットの最大値，最小値を求め，ⓘⓥの手順の計算を行う。

（B－C－D，B－C－Eの組み合わせを行なう）図〔Ⅲ－3〕参照。

Gō　Tō　　ⓘⓥ

もし，又ⓘⓥ→ⓥに戻ってきたら，即ち，この組み合わせによってもスペックに入らない場合には次の組み合わせ，Bのペレットを1時カットし，A＋C＝ADD，残りのペレットの最大値，最小値を求めⓘⓥの手順の計算を行う。

（A－C－D，A－C－Eの組み合せを行なう）

Gō　Tō　　ⓘⓥ

ⓘⓥ→ⓥなら，次は，Cのペレットカットし……。　Gō　Tō　ⓘⓥ

〃　　D　　〃　　〃……。　Gō　Tō　ⓘⓥ

〃　　E　　〃　　〃……。　Gō　Tō　ⓘⓥ

まだⓘⓥ→ⓥなら，Aのペレットを完全にカットし，1時Bをカット

C＋D＝ADD　残りのペレットはEしかない。すなわち，

H_{MAX}＝E，H_{MIN}＝Eでⓘⓥの手順へ（C－D－Eの組み合わせ）

Gō　Tō　　ⓘⓥ

ⓘⓥ→ⓥなら，Cのペレット1時カット

B＋D＝ADD，H_{MAX}＝E，H_{MIN}＝E（B－D－Eの組み合わせ）

Gō　Tō　　ⓘⓥ

ⓘⓥ→ⓥなら，A，Bの両ペレット完全カットし，

C＋D＝ADD，H_{MAX}＝E，H_{MIN}＝E（C－D－Eの組み合わせ）

Gō　Tō　　ⓘⓥ

ⓘⓥ→ⓥなら，残る組み合わせはもうないから，どのように不合格ピンペレットと余りペレットを組み合わせても，スペックに入らないということだから記憶している組み合わせの中で最も合格ピン本数が多いペレットの組み合わせ結果をアウトプットする。

ⓥⓘ　合格となったペレットデーターを，（1，2，3）（2，2，3）（3，2，3）に記憶，残りのペレットがPIN 1本分作れる個数分の有無を調べてまだある場合は，Gō Tō ⓘ。（この例では，1本分相当ペレットがない）ない場合はアウトプットする。

Ⅱ. フローチャート

Ⅱ－1 MAIN PROGRAM

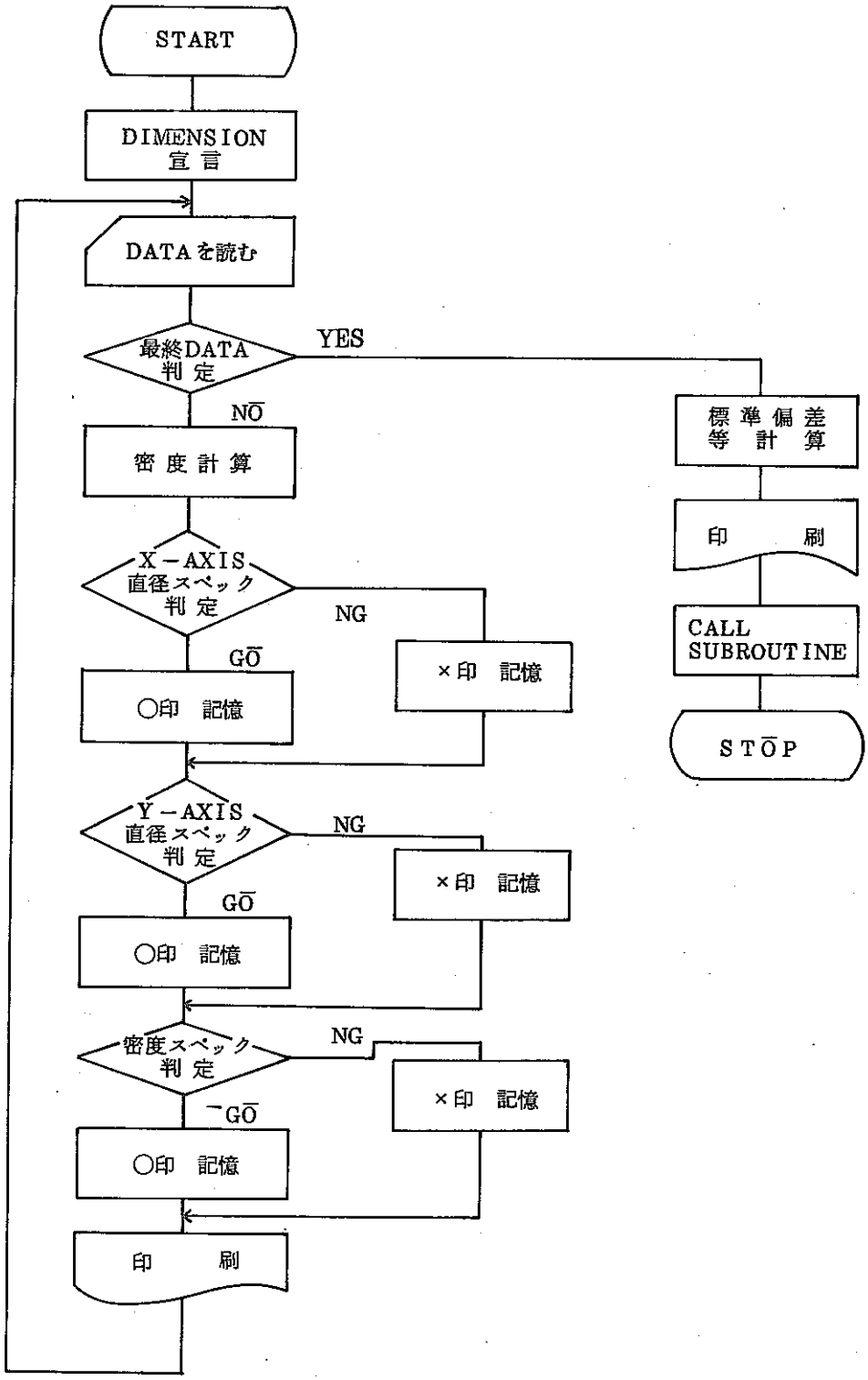

Ⅱ－2　SUBROUTIN PROGRAM－(STACK－I)

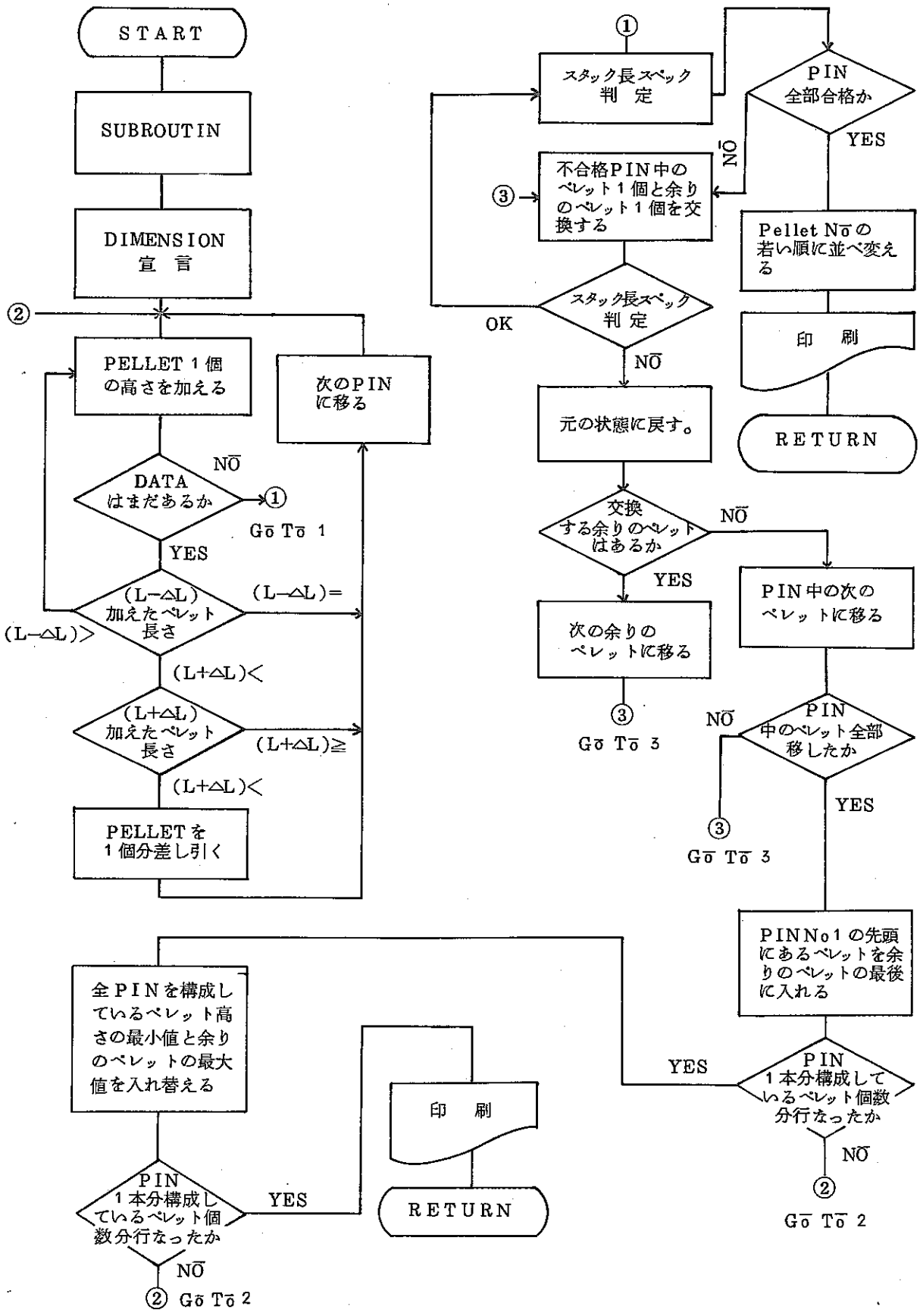

Ⅱ－3　SUBROUTIN PROGRAM－(STACK－Ⅱ)

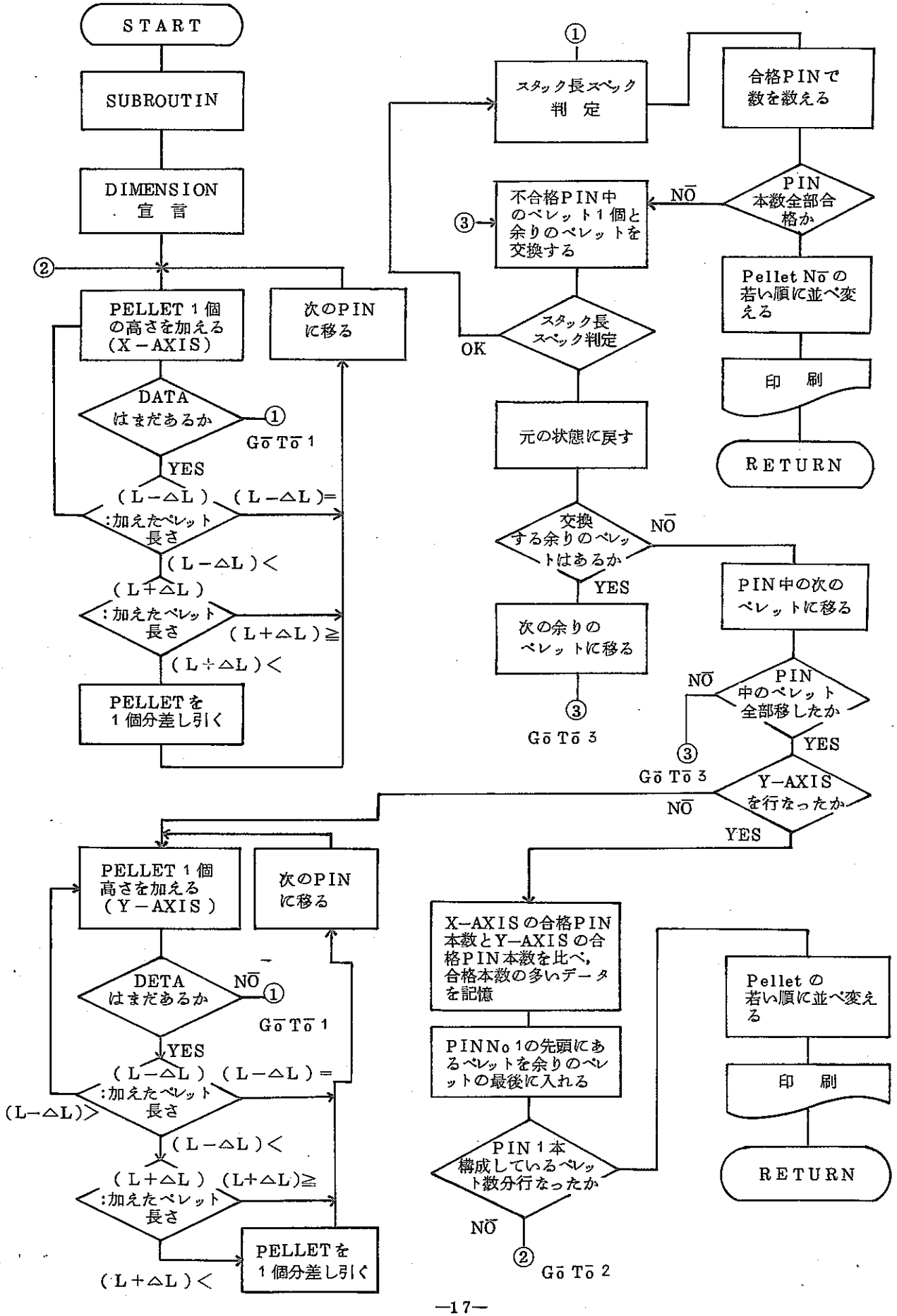

Ⅱ－4　SUBROUTIN PROGRAM—（STACK—Ⅲ）

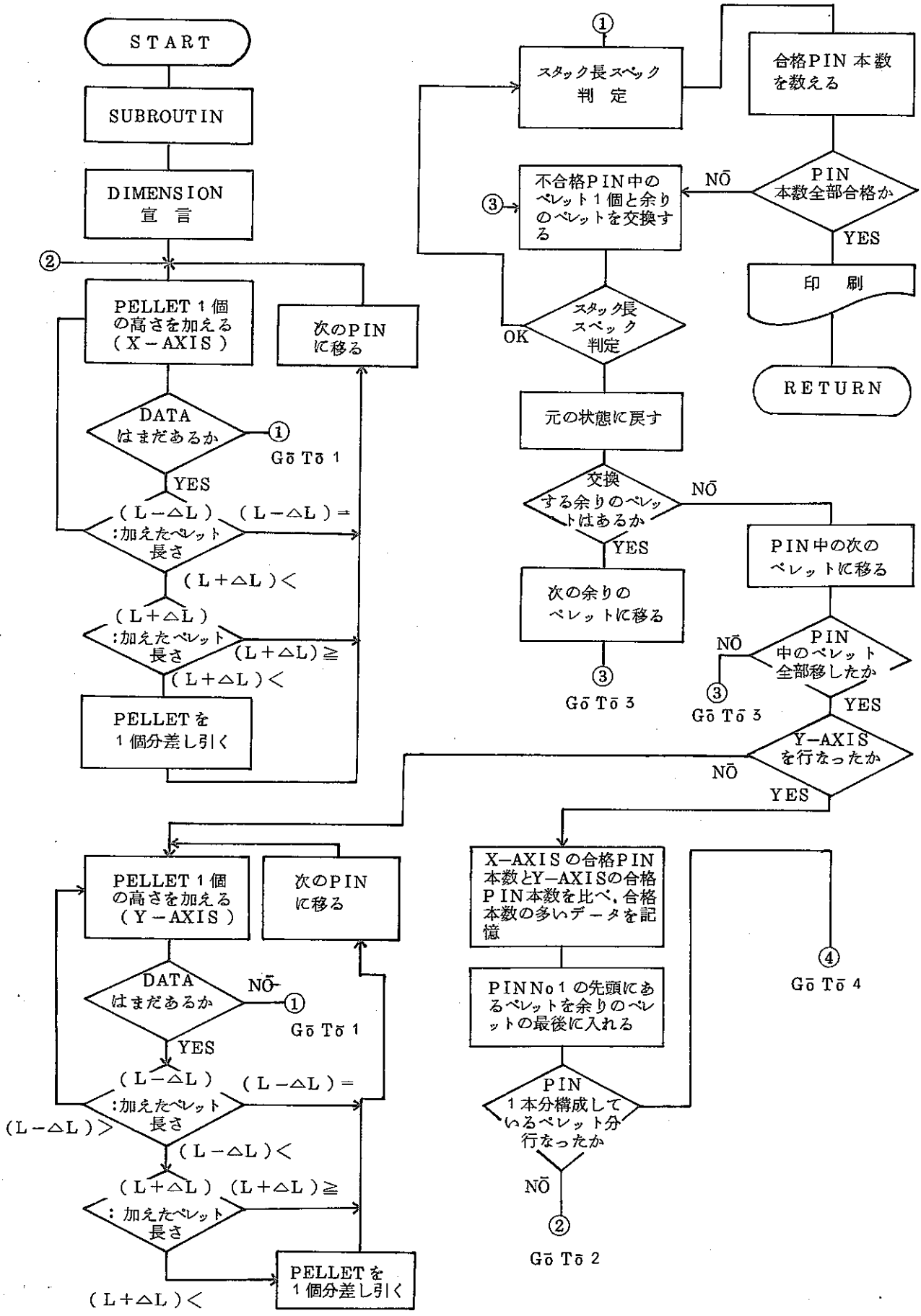

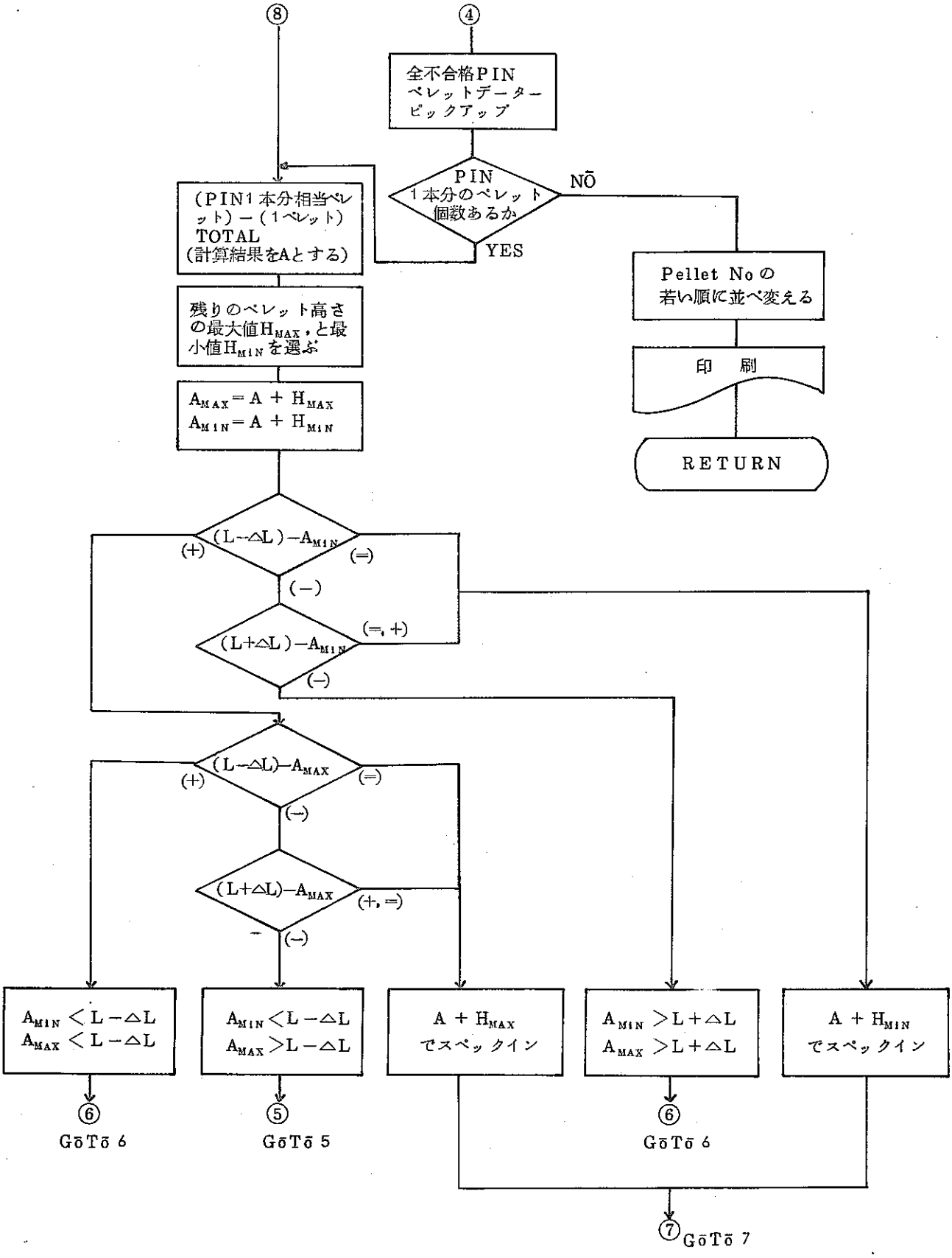
⑧
④
全不合格PIN
ペレットデーター
ピックアップ
PIN
1本分のペレット
個数あるか
NŌ
YES
(PIN1本分相当ペレット)−(1ペレット)
TOTAL
(計算結果をAとする)
Pellet Noの
若い順に並べ変える
残りのペレット高さの最大値H_{MAX}，と最小値H_{MIN}を選ぶ
印　刷
$A_{MAX} = A + H_{MAX}$
$A_{MIN} = A + H_{MIN}$
RETURN
$(L-\triangle L)-A_{MIN}$
(+)
(=)
(−)
$(L+\triangle L)-A_{MIN}$
(=, +)
(−)
$(L-\triangle L)-A_{MAX}$
(+)
(=)
(−)
$(L+\triangle L)-A_{MAX}$
(+, =)
(−)
$A_{MIN} < L-\triangle L$
$A_{MAX} < L-\triangle L$
$A_{MIN} < L-\triangle L$
$A_{MAX} > L-\triangle L$
$A + H_{MAX}$
でスペックイン
$A_{MIN} > L+\triangle L$
$A_{MAX} > L+\triangle L$
$A + H_{MIN}$
でスペックイン
⑥
GōTō 6
⑤
GōTō 5
⑥
GōTō 6
⑦
GōTō 7

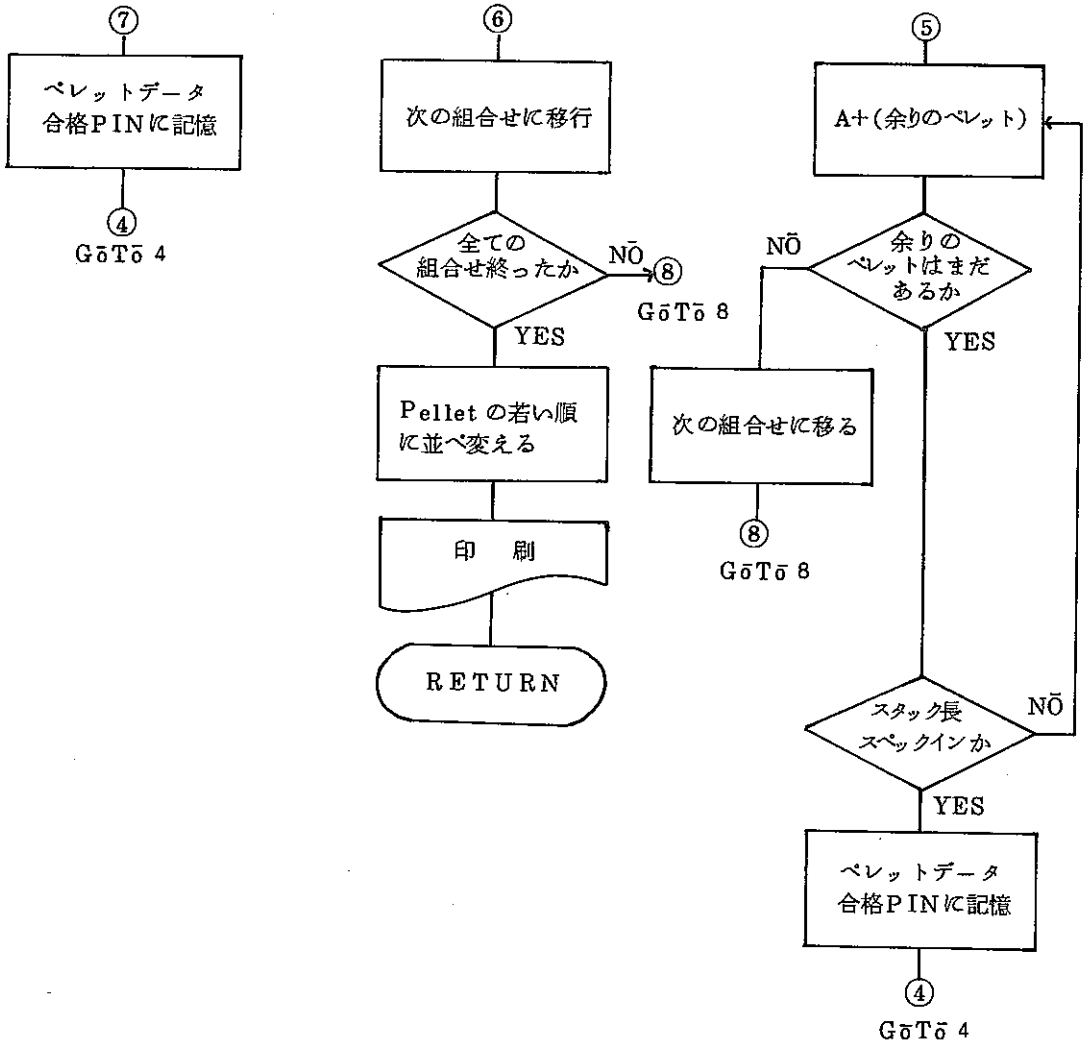
⑦
ペレットデータ
合格PINに記憶
④
GōTō 4
⑥
次の組合せに移行
全ての
組合せ終ったか
NŌ
⑧
GōTō 8
YES
Pellet の若い順
に並べ変える
印　刷
RETURN
⑤
A+(余りのペレット)
NŌ
余りの
ペレットはまだ
あるか
YES
次の組合せに移る
⑧
GōTō 8
スタック長
スペックインか
NŌ
YES
ペレットデータ
合格PINに記憶
④
GōTō 4

Ⅲ. 入　力　形　式

表－1

Card No	FORTRAN Symbol	Data Form	Descviption	Unit
1	TITLE	20A4	プロジエクトチーム及びロット名	
2	B1 B2 B3 B4 C1 C2 SPECL SPECKH	8F10,3	B1＝ペレット径下限スペック B2＝ペレット径上限スペック B3＝ペレット密度(T,D)下限スペック B4＝ペレット密度(T,D)上限スペック C1＝補正体積 C2＝理論密度 SPECL＝スタック長下限スペック SPECKH＝スタック長上限スペック	〔mm〕 〔mm〕 〔%〕 〔%〕 〔cm³〕 〔g/cm³〕 〔mm〕 〔mm〕
3	DELTA	F10,3	粗スタック調整時の誤差値(2.0位が良い)	〔mm〕
4	D1 D2 H W	4F10,3	D1＝ペレット直径データ(X—Axis) D2＝ペレット直径データ(Y—Axis) H＝ペレット高さデータ W＝ペレット重量データ	〔mm〕 〔mm〕 〔mm〕 〔g〕
⋮	⋮	⋮	⋮	⋮
最後のカード	D1	F10,3	0.0インプット	

Ⅳ. 出　力　形　式

1. メインプログラム

次の様なデータがアウトプットされる。出力形式についてはⅤ－1参照

① プロジェクト名，ロット名

② ペレットナンバー

③ インプットデーターの直径（X—Axis）

④ インプットデーターの直径（Y—Axis）

⑤ 直径（X—Axis，Y—Axis）の平均値

⑥ インプットデーターの高さ

⑦ インプットデーターの重量

⑧ ペレット密度（g／cc）

⑨ ペレット理論密度（%）

⑩ ペレットの総合スペック判定（直径，理論密度）

⑪ 直径のみのスペック判定

⑫ 密度のみのスペック判定

⑬ 直径の平均値と標準偏差

⑭ 重量の平均値と標準偏差

⑮ 密度（g／cc）平均値と標準偏差

⑯ 理論密度平均値と標準偏差

⑰ スペック合格ペレット個数

⑱ スペック不合格ペレット個数

⑲ TOTAL PELLET重量

⑳ TOTAL PELLET高さ

2. サブルーチンプログラム

次の様なデータがアウトプットされる。出力形式についてはⅤ－2参照

① プロジェクト名，ロット名

② PINナンバーとページ数

③ ペレットナンバー

④ ペレット直径（X—Axis）

⑤ ペレット直径（Y—Axis）

⑥ ペレット高さ

⑦ ペレット重量

⑧ 理論密度

⑨ スタック調整後スタック長

⑩ スタック長構成ペレットTOTAL重量

V 計 算 例

V－1 メインプログラム アウトプット

V－2 サブルーチンプログラム アウトプット

V−1　メインプログラム　アウトプット

HALDEN HB-34

NO	DIA.(X) (MM)	DIA.(Y) (MM)	DIA.(AV) (MM)	HEIGHT (MM)	WEIGHT (GRAM)	DENSITY (G/CC)	DENSI(T,D) (PERCENT)	JUDGE DIA.&.DENSI.	JUDGE DIA.(AV)	JUDGE DENSI
2001	10.500	10.500	10.500	10.450	9.468	10.487	95.419	0	0	0
2002	10.500	10.500	10.500	9.630	8.656	10.406	94.682	0	0	0
2003	10.510	10.510	10.510	10.350	9.371	10.460	95.174	0	0	0
2004	10.510	10.510	10.510	10.150	9.105	10.363	94.299	0	0	0
2005	10.510	10.510	10.510	10.400	9.284	10.313	93.837	0	0	0
2006	10.500	10.500	10.500	10.450	9.450	10.467	95.238	0	0	0
2007	10.550	10.550	10.550	10.060	9.040	10.303	93.749	0	0	0
2008	10.500	10.500	10.500	10.210	9.172	10.398	94.614	0	0	0
2009	10.500	10.500	10.500	9.910	8.937	10.439	94.987	0	0	0
2010	10.500	10.500	10.500	10.420	9.357	10.394	94.573	0	0	0
2011	10.500	10.500	10.500	9.890	8.879	10.392	94.562	0	0	0
2012	10.500	10.500	10.500	9.840	8.866	10.430	94.905	0	0	0
2013	10.500	10.500	10.500	9.960	9.006	10.467	95.239	0	0	0
2014	10.500	10.500	10.500	10.540	9.431	10.356	94.233	0	0	0
2015	10.500	10.500	10.500	10.680	9.690	10.501	95.549	X	0	X
2016	10.510	10.510	10.510	10.190	9.146	10.369	94.351	0	0	0
2017	10.500	10.500	10.500	10.130	9.172	10.480	95.363	0	0	0
2018	10.500	10.500	10.500	10.250	9.168	10.353	94.203	0	0	0
2019	10.500	10.500	10.500	9.890	8.916	10.436	94.956	0	0	0

	AVERAGE	STANDERD DEVIATION
DIAMETER (MM)	10.505	0.0123526
WEIGHT (G)	9.164	0.2584106
DENSITY(G/CC)	10.411	0.0583824
DENSITY (PER)	94.733	0.5298949

GOKAKU PELLET	18 (KO)
FUGOKAKU PELLET	1 (KO)
TOTAL WEIGHT	174.114 (G)
TOTAL HEIGHT	193.400 (MM)

HALDEN HB-201,HB-202,(HB-201 HOLE DIA.=3.492, HB-202 HOLE DIA.=3.496,)

NO	DIA.(X) (MM)	DIA.(Y) (MM)	DIA.(AV) (MM)	HEIGHT (MM)	WEIGHT (GRAM)	DENSITY G/CC)	DENSI(T.D) (PERCENT)	DIA.&. DENSI.	JUDGE DIA.(AV)	JUDGE DENSI
I2001	10.560	10.570	10.565	10.585	8.512	10.336	94.045	[illegible]	0	0
I2002	10.540	10.535	10.537	10.085	8.059	10.333	94.022	0	0	0
I2003	10.545	10.535	10.540	10.370	8.321	10.369	94.351	0	0	0
I2004	10.545	10.535	10.540	10.675	8.579	10.384	94.487	0	0	0
I2005	10.545	10.545	10.545	10.755	8.688	10.426	94.871	0	0	0
I2006	10.575	10.560	10.567	10.365	8.342	10.339	94.080	0	0	0
I2007	10.525	10.530	10.527	10.325	8.271	10.380	94.446	0	0	0
I2008	10.540	10.530	10.535	10.360	8.311	10.378	94.429	0	0	0
I2009	10.565	10.560	10.562	10.695	8.571	10.305	93.769	0	0	0
I2010	10.555	10.550	10.552	10.565	8.496	10.363	94.298	0	0	0
I2011	10.545	10.555	10.550	10.895	8.819	10.436	94.958	0	0	0
I2012	10.505	10.515	10.510	10.160	8.091	10.358	94.250	0	0	0
I2013	10.540	10.545	10.542	10.495	8.358	10.285	93.587	0	0	0
I2014	10.545	10.555	10.550	10.635	8.520	10.329	93.990	0	0	0
I2015	10.530	10.535	10.532	10.375	8.251	10.293	93.662	0	0	0
I2016	10.540	10.525	10.532	10.215	8.185	10.372	94.373	0	0	0
I2017	10.550	10.545	10.547	10.565	8.454	10.323	93.932	0	0	0
I2018	10.570	10.565	10.567	10.790	8.689	10.344	94.120	0	0	0
I2019	10.535	10.545	10.540	10.160	8.115	10.322	93.924	0	0	0
I2020	10.555	10.555	10.555	10.670	8.606	10.388	94.525	0	0	0
I2021	10.540	10.535	10.537	10.205	8.170	10.352	94.192	0	0	0
I2022	10.545	10.540	10.542	10.320	8.251	10.326	93.962	0	0	0
I2023	10.550	10.570	10.560	10.700	8.570	10.305	93.764	0	0	0
I2024	10.520	10.525	10.522	10.260	8.141	10.292	93.653	0	0	0
I2025	10.570	10.560	10.565	10.670	8.551	10.300	93.721	0	0	0
I2026	10.555	10.545	10.550	10.665	8.598	10.395	94.582	0	0	0
I2027	10.545	10.550	10.547	10.770	8.681	10.398	94.612	0	0	0
I2028	10.545	10.565	10.555	10.445	8.306	10.243	93.202	0	0	0
I2029	10.550	10.550	10.550	10.530	8.460	10.359	94.262	0	0	0
I2030	10.555	10.550	10.552	10.435	8.393	10.366	94.320	0	0	0
I2031	10.535	10.550	10.542	10.100	8.076	10.328	93.980	0	0	0
I2032	10.540	10.545	10.542	10.370	8.330	10.375	94.402	0	0	0
I2033	10.530	10.535	10.532	10.625	8.584	10.456	95.141	0	0	0
I2034	10.525	10.525	10.525	10.420	8.291	10.315	93.859	0	0	0
I2035	10.540	10.545	10.542	10.380	8.267	10.286	93.598	0	0	0
I2036	10.545	10.560	10.552	10.610	8.563	10.401	94.637	0	0	0
I2037	10.535	10.530	10.532	10.065	8.045	10.347	94.147	0	0	0
I2038	10.540	10.535	10.537	10.640	8.503	10.332	94.009	0	0	0
I2039	10.540	10.535	10.537	10.235	8.212	10.374	94.398	0	0	0
I2040	10.565	10.560	10.562	10.810	8.707	10.357	94.240	0	0	0
I2041	10.555	10.550	10.552	10.410	8.373	10.366	94.322	0	0	0
I2042	10.535	10.540	10.537	10.640	8.578	10.423	94.838	0	0	0
I2043	10.515	10.510	10.512	10.095	8.013	10.319	93.894	0	0	0
I2044	10.550	10.550	10.550	10.250	8.206	10.324	93.939	0	0	0
I2045	10.550	10.555	10.552	10.135	8.086	10.283	93.570	0	0	0
I2046	10.555	10.550	10.552	10.820	8.734	10.402	94.647	0	0	0
I2047	10.540	10.530	10.535	10.550	8.492	10.412	94.742	0	0	0
I2048	10.545	10.550	10.547	10.215	8.191	10.346	94.140	0	0	0
I2049	10.545	10.555	10.550	10.735	8.666	10.408	94.707	0	0	0
I2050	10.510	10.505	10.507	10.110	8.015	10.317	93.879	0	0	0

HALDEN HB-201,HB-202,(HB-201 HOLE DIA.=3.492, HB-202 HOLE DIA.=3.496.)

NO	DIA.(X) (MM)	DIA.(Y) (MM)	DIA.(AV) (MM)	HEIGHT (MM)	WEIGHT (GRAM)	DENSITY G/CC)	DENSI(T.D) (PERCENT)	DIA.&.DENSI.	J	U	D	G	E	DIA.(AV)	DENSI
12051	10.550	10.555	10.552	10.230	8.172	10.296	93.683	0		0			0		
12052	10.550	10.545	10.547	10.195	8.143	10.306	93.773	0		0			0		
12053	10.545	10.550	10.547	10.670	8.616	10.417	94.787	0		0			0		
12054	10.535	10.530	10.532	10.300	8.177	10.276	93.500	0		0			0		
12055	10.560	10.560	10.560	10.655	8.544	10.317	93.876	0		0			0		
12056	10.540	10.540	10.540	10.085	8.048	10.313	93.844	0		0			0		
12057	10.530	10.540	10.535	9.985	7.935	10.282	93.556	0		0			0		
12058	10.560	10.555	10.557	10.695	8.579	10.326	93.957	0		0			0		
12059	10.520	10.515	10.517	10.145	8.042	10.294	93.667	0		0			0		
12060	10.570	10.565	10.567	10.820	8.712	10.342	94.107	0		0			0		
12061	10.570	10.560	10.565	10.850	8.718	10.326	93.960	0		0			0		
12062	10.545	10.545	10.545	10.620	8.550	10.392	94.555	0		0			0		
12063	10.560	10.545	10.552	10.630	8.574	10.394	94.580	0		0			0		
12064	10.530	10.525	10.527	10.290	8.178	10.298	93.703	0		0			0		
12065	10.540	10.530	10.535	10.220	8.189	10.366	94.323	0		0			0		
12066	10.510	10.500	10.505	10.075	7.990	10.327	93.963	0		0			0		
12067	10.545	10.540	10.542	10.605	8.535	10.394	94.574	0		0			0		
12068	10.550	10.550	10.550	10.260	8.156	10.251	93.275	0		0			0		
12069	10.565	10.570	10.567	10.650	8.573	10.340	94.089	0		0			0		
12070	10.535	10.540	10.537	10.145	8.017	10.218	92.977	0		0			0		
12071	10.545	10.555	10.550	10.075	8.064	10.322	93.923	0		0			0		
12072	10.515	10.495	10.505	10.160	8.047	10.313	93.838	0		0			0		
12073	10.555	10.545	10.550	10.545	8.477	10.365	94.316	0		0			0		
12074	10.555	10.545	10.550	10.560	8.503	10.382	94.471	0		0			0		
12075	10.555	10.555	10.555	10.715	8.641	10.387	94.509	0		0			0		
12076	10.530	10.520	10.525	10.180	8.066	10.273	93.472	0		0			0		
12077	10.520	10.505	10.512	9.870	7.846	10.335	94.042	0		0			0		
12078	10.525	10.530	10.527	10.495	8.377	10.342	94.101	0		0			0		
12079	10.510	10.505	10.507	10.120	8.041	10.340	94.090	0		0			0		
12080	10.545	10.535	10.540	10.395	8.343	10.371	94.372	0		0			0		
12081	10.535	10.515	10.525	10.340	8.224	10.311	93.823	0		0			0		
12082	10.525	10.540	10.532	10.550	8.453	10.370	94.357	0		0			0		
12083	10.545	10.545	10.545	10.570	8.496	10.375	94.404	0		0			0		
12084	10.575	10.555	10.565	10.695	8.581	10.312	93.829	0		0			0		
12085	10.530	10.540	10.535	10.195	8.162	10.357	94.243	0		0			0		
12086	10.540	10.555	10.547	10.660	8.605	10.414	94.755	0		0			0		
12087	10.505	10.525	10.515	10.165	8.075	10.321	93.916	0		0			0		
12088	10.535	10.545	10.540	10.705	8.593	10.372	94.375	0		0			0		
12089	10.550	10.550	10.550	10.350	8.287	10.325	93.946	0		0			0		
12090	10.560	10.560	10.560	10.780	8.680	10.359	94.261	0		0			0		
12091	10.505	10.505	10.505	9.855	7.851	10.374	94.397	0		0			0		
12092	10.535	10.530	10.532	10.180	8.157	10.372	94.375	0		0			0		
12093	10.545	10.550	10.547	10.385	8.337	10.357	94.244	0		0			0		
12094	10.530	10.540	10.535	10.215	8.175	10.353	94.208	0		0			0		
12095	10.550	10.545	10.547	10.875	8.770	10.403	94.656	0		0			0		
12096	10.560	10.560	10.560	10.755	8.641	10.337	94.056	0		0			0		
12097	10.530	10.530	10.530	10.680	8.585	10.409	94.711	0		0			0		
12098	10.550	10.545	10.547	10.195	8.171	10.341	94.095	0		0			0		
12099	10.545	10.550	10.547	10.730	8.603	10.343	94.112	0		0			0		
12100	10.515	10.525	10.520	10.205	8.149	10.364	94.303	0		0			0		

N841-77-57

HALDEN HB-201,HB-202,(HB-201 HOLE DIA,=3.492, HB-202 HOLE DIA,=3.496,)

NO	DIA.(X) (MM)	DIA.(Y) (MM)	DIA.(AV) (MM)	HEIGHT MM)	WEIGHT (GRAM)	DENSITY G/CC)	DENSI.(T.D) (PERCENT)	DIA.&. DENSI.	J	U	D	G	E	DIA.(AV)	DENSI
12101	10.550	10.545	10.547	10.845	8.748	10.405	94.680	0						0	0
12102	10.520	10.515	10.517	10.465	8.370	10.385	94.496	0						0	0
12103	10.565	10.575	10.570	10.765	8.677	10.348	94.159	0						0	0
12104	10.530	10.515	10.522	10.095	8.014	10.298	93.705	0						0	0
12105	10.545	10.550	10.547	10.605	8.487	10.324	93.942	0						0	0
12106	10.510	10.520	10.515	10.140	8.031	10.291	93.636	0						0	0
12107	10.535	10.540	10.537	10.215	8.173	10.345	94.134	0						0	0
12108	10.530	10.530	10.530	10.345	8.281	10.366	94.326	0						0	0
12109	10.545	10.550	10.547	10.325	8.270	10.334	94.032	0						0	0
12110	10.540	10.550	10.545	10.620	8.522	10.358	94.246	0						0	0
12111	10.535	10.535	10.535	10.140	8.110	10.347	94.152	0						0	0
12112	10.530	10.515	10.522	10.075	8.038	10.350	94.173	0						0	0
12113	10.545	10.555	10.550	10.115	8.066	10.284	93.573	0						0	0
12114	10.570	10.525	10.547	10.675	8.564	10.349	94.170	0						0	0
12115	10.535	10.530	10.532	10.220	8.195	10.379	94.442	0						0	0
12116	10.535	10.530	10.532	10.285	8.239	10.369	94.347	0						0	0
12117	10.525	10.535	10.530	10.250	8.119	10.258	93.341	0						0	0
12118	10.545	10.535	10.540	10.065	8.024	10.303	93.751	0						0	0
12119	10.535	10.540	10.537	10.465	8.360	10.328	93.979	0						0	0
12120	10.535	10.530	10.532	10.180	8.144	10.355	94.225	0						0	0
12121	10.555	10.540	10.547	10.640	8.537	10.351	94.183	0						0	0
12122	10.560	10.540	10.550	10.215	8.176	10.322	93.917	0						0	0
12123	10.570	10.560	10.565	10.700	8.568	10.291	93.643	0						0	0
12124	10.535	10.545	10.540	10.715	8.612	10.385	94.495	0						0	0
12125	10.550	10.545	10.547	10.590	8.529	10.390	94.541	0						0	0
12126	10.540	10.555	10.547	10.060	8.107	10.398	94.616	0						0	0
12127	10.530	10.535	10.532	10.095	8.068	10.345	94.134	0						0	0
12128	10.560	10.560	10.560	10.710	8.626	10.362	94.289	0						0	0
12129	10.550	10.555	10.552	10.530	8.463	10.358	94.245	0						0	0
12130	10.525	10.525	10.525	10.265	8.236	10.402	94.649	0						0	0
12131	10.540	10.540	10.540	10.295	8.227	10.327	93.967	0						0	0
12132	10.560	10.560	10.560	10.860	8.771	10.390	94.545	0						0	0
12133	10.530	10.530	10.530	10.150	8.113	10.352	94.195	0						0	0
12134	10.545	10.535	10.540	10.705	8.599	10.379	94.440	0						0	0
12135	10.545	10.545	10.545	9.770	7.880	10.414	94.758	0						0	0
12136	10.545	10.545	10.545	10.765	8.669	10.394	94.575	0						0	0
12137	10.550	10.545	10.547	10.315	8.272	10.347	94.146	0						0	0
12138	10.545	10.540	10.542	10.195	8.173	10.355	94.219	0						0	0
12139	10.525	10.525	10.525	10.355	8.250	10.329	93.983	0						0	0
12140	10.545	10.545	10.545	10.660	8.564	10.369	94.353	0						0	0
12141	10.550	10.550	10.550	10.795	8.706	10.398	94.613	0						0	0
12142	10.500	10.505	10.502	9.745	7.753	10.366	94.326	0						0	0
12143	10.545	10.545	10.545	10.640	8.571	10.398	94.609	0						0	0
12144	10.535	10.540	10.537	10.210	8.180	10.359	94.261	0						0	0
12145	10.545	10.560	10.552	10.690	8.576	10.338	94.069	0						0	0
12146	10.545	10.545	10.545	10.700	8.577	10.346	94.142	0						0	0
12147	10.545	10.550	10.547	10.345	8.306	10.359	94.258	0						0	0
12148	10.545	10.545	10.545	10.340	8.241	10.288	93.615	0						0	0
12149	10.520	10.530	10.525	10.320	8.188	10.286	93.594	0						0	0
12150	10.575	10.580	10.577	10.340	8.317	10.311	93.826	0						0	0

N841-77-57

HALDEN HB-201,HB-202,(HB-201 HOLE DIA,=3.492, HB-202 HOLE DIA,=3.496,)

NO	DIA.(X) (MM)	DIA.(Y) (MM)	DIA.(AV) (MM)	HEIGHT (MM)	WEIGHT (GRAM)	DENSITY G/CC)	DENSI(T.D) (PERCENT)	DIA.&.DENSI,	JUDGE DIA.(AV)	JUDGE DENSI
I2151	10.500	10.500	10.500	10.125	8.040	10.351	94.183	O	O	O
I2152	10.550	10.550	10.550	10.610	8.537	10.375	94.400	O	O	O
I2153	10.540	10.545	10.542	10.485	8.432	10.386	94.506	O	O	O
I2154	10.555	10.560	10.557	10.680	8.611	10.379	94.441	O	O	O
I2155	10.545	10.550	10.547	10.845	8.733	10.388	94.518	O	O	O
I2156	10.530	10.530	10.530	10.700	8.598	10.405	94.676	O	O	O
I2157	10.530	10.530	10.530	10.675	8.573	10.399	94.623	O	O	O
I2158	10.535	10.535	10.535	10.425	8.387	10.407	94.697	O	O	O
I2159	10.535	10.540	10.537	10.430	8.393	10.404	94.668	O	O	O
I2160	10.540	10.535	10.537	10.345	8.304	10.379	94.437	O	O	O
I3001	10.560	10.560	10.560	10.130	8.268	10.506	95.597	X	O	X
I3002	10.555	10.550	10.552	9.680	7.714	10.276	93.504	O	O	O
I3003	10.550	10.555	10.552	10.005	8.119	10.463	95.204	O	O	O
I3004	10.555	10.555	10.555	9.895	7.960	10.367	94.330	O	O	O
I3005	10.555	10.560	10.557	9.940	8.022	10.395	94.583	O	O	O
I3006	10.535	10.540	10.537	9.890	7.981	10.439	94.982	O	O	O
I3007	10.565	10.560	10.562	10.020	8.081	10.376	94.414	O	O	O
I3008	10.550	10.550	10.550	9.765	7.798	10.303	93.746	O	O	O
I3009	10.565	10.570	10.567	9.930	7.989	10.340	94.088	O	O	O
I3010	10.545	10.540	10.542	9.665	7.650	10.229	93.072	O	O	O
I3011	10.555	10.550	10.552	9.880	7.930	10.349	94.169	O	O	O
I3012	10.545	10.540	10.542	9.610	7.624	10.252	93.288	O	O	O
I3013	10.550	10.545	10.547	9.890	7.950	10.376	94.411	O	O	O
I3014	10.550	10.545	10.547	9.755	7.766	10.276	93.508	O	O	O
I3015	10.565	10.565	10.565	10.100	8.212	10.455	95.131	O	O	O
I3016	10.565	10.570	10.567	10.100	8.223	10.463	95.207	O	O	O
I3017	10.560	10.555	10.557	9.865	7.924	10.346	94.140	O	O	O
I3018	10.550	10.555	10.552	9.895	7.943	10.350	94.179	O	O	O
I3019	10.555	10.555	10.555	10.110	8.259	10.527	95.784	X	O	X
I3020	10.545	10.550	10.547	9.875	7.918	10.350	94.175	O	O	O
I3021	10.550	10.560	10.555	9.765	7.775	10.261	93.370	O	O	O
I3022	10.560	10.565	10.562	9.885	7.949	10.347	94.145	O	O	O
I3023	10.555	10.555	10.555	9.915	7.980	10.372	94.376	O	O	O
I3024	10.565	10.570	10.567	10.075	8.177	10.431	94.911	O	O	O
I3025	10.545	10.550	10.547	9.775	7.830	10.340	94.084	O	O	O
I3026	10.570	10.565	10.567	9.875	7.948	10.345	94.128	O	O	O
I3027	10.575	10.575	10.575	10.070	8.149	10.384	94.482	O	O	O
I3028	10.565	10.550	10.557	9.970	8.074	10.430	94.908	O	O	O
I3029	10.545	10.555	10.550	9.870	7.934	10.370	94.362	O	O	O
I3030	10.570	10.570	10.570	10.030	8.137	10.421	94.821	O	O	O
I3031	10.555	10.550	10.552	9.850	7.902	10.344	94.123	O	O	O
I3032	10.560	10.555	10.557	9.845	7.895	10.329	93.987	O	O	O
I3033	10.565	10.565	10.565	10.115	8.237	10.471	95.278	O	O	O
I3034	10.555	10.550	10.552	9.760	7.826	10.339	94.081	O	O	O
I3035	10.555	10.550	10.552	9.865	7.938	10.375	94.408	O	O	O
I3036	10.560	10.565	10.562	10.090	8.200	10.456	95.137	O	O	O
I3037	10.545	10.555	10.550	9.855	7.920	10.368	94.340	O	O	O
I3038	10.550	10.555	10.552	9.780	7.836	10.331	94.008	O	O	O
I3039	10.545	10.550	10.547	9.630	7.639	10.240	93.177	O	O	O
I3040	10.545	10.545	10.545	9.610	7.609	10.227	93.055	O	O	O

N841—77—57

HALDEN HB-201,HB-202,(HB-201 HOLE DIA.=3,492, HB-202 HOLE DIA.=3,496.)								JUDGE		
NO	DIA.(X) (MM)	DIA.(Y) (MM)	DIA.(AV) (MM)	HEIGHT MM)	WEIGHT GRAM)	DENSITY G/CC)	DENSI(T.D) (PERCENT)	DIA.&. DENSI.	DIA.(AV)	DENSI
13041	10,555	10,555	10,555	9,825	7,845	10,290	93,633	0	0	0
13042	10,560	10,555	10,557	9,710	7,777	10,317	93,875	0	0	0
13043	10,555	10,550	10,552	9,910	8,012	10,424	94,853	0	0	0
13044	10,565	10,565	10,565	9,940	8,004	10,355	94,219	0	0	0
13045	10,560	10,565	10,562	9,920	7,996	10,371	94,366	0	0	0
13046	10,560	10,550	10,555	9,915	7,953	10,337	94,057	0	0	0
13047	10,560	10,560	10,560	9,710	7,781	10,317	93,873	0	0	0
13048	10,560	10,560	10,560	10,170	8,293	10,496	95,507	X	0	X
13049	10,560	10,565	10,562	9,840	7,892	10,320	93,899	0	0	0
13050	10,555	10,555	10,555	9,895	7,960	10,367	94,330	0	0	0
13051	10,550	10,550	10,550	10,110	8,253	10,530	95,817	X	0	X
13052	10,555	10,560	10,557	9,890	7,967	10,376	94,411	0	0	0
13053	10,540	10,540	10,540	9,700	7,761	10,345	94,130	0	0	0
13054	10,545	10,550	10,547	9,740	7,782	10,314	93,845	0	0	0
13055	10,560	10,565	10,562	10,115	8,242	10,483	95,387	0	0	0
13056	10,550	10,555	10,552	9,960	8,056	10,429	94,894	0	0	0
13057	10,550	10,550	10,550	9,860	7,944	10,394	94,578	0	0	0
13058	10,560	10,565	10,562	9,925	8,011	10,385	94,495	0	0	0
13059	10,540	10,545	10,542	9,650	7,664	10,263	93,387	0	0	0
13060	10,610	10,615	10,612	9,700	8,039	10,551	96,007	X	X	X
13061	10,555	10,555	10,555	10,080	8,221	10,510	95,629	X	0	X
13062	10,535	10,540	10,537	9,660	7,668	10,269	93,439	0	0	0
13063	10,545	10,545	10,545	9,835	7,906	10,382	94,466	0	0	0
13064	10,570	10,570	10,570	10,185	8,312	10,482	95,381	0	0	0
13065	10,550	10,550	10,550	9,890	7,959	10,382	94,468	0	0	0
13066	10,565	10,570	10,567	10,075	8,197	10,456	95,143	0	0	0
13067	10,555	10,555	10,555	10,060	8,193	10,495	95,493	0	0	0
13068	10,565	10,560	10,562	10,165	8,315	10,524	95,757	X	0	X
13069	10,555	10,560	10,557	9,940	8,009	10,378	94,430	0	0	0
13070	10,540	10,540	10,540	9,735	7,748	10,290	93,633	0	0	0
13071	10,550	10,550	10,550	9,820	7,829	10,285	93,590	0	0	0
13072	10,555	10,560	10,557	10,135	8,285	10,528	95,797	X	0	X
13073	10,560	10,560	10,560	9,890	7,948	10,345	94,135	0	0	0
13074	10,540	10,540	10,540	9,900	7,991	10,435	94,954	0	0	0
13075	10,550	10,550	10,550	9,790	7,826	10,313	93,842	0	0	0
13076	10,560	10,565	10,562	10,080	8,213	10,483	95,383	0	0	0
13077	10,560	10,560	10,560	9,815	7,879	10,334	94,034	0	0	0
13078	10,560	10,560	10,560	9,960	8,067	10,426	94,871	0	0	0
13079	10,545	10,550	10,547	9,725	7,760	10,300	93,725	0	0	0
13080	10,555	10,555	10,555	9,815	7,891	10,361	94,278	0	0	0
13081	10,575	10,565	10,570	10,095	8,224	10,464	95,216	0	0	0
13082	10,545	10,555	10,550	10,005	8,128	10,480	95,360	0	0	0
13083	10,555	10,555	10,555	9,940	8,027	10,407	94,692	0	0	0
13084	10,555	10,560	10,557	10,055	8,158	10,450	95,082	0	0	0
13085	10,545	10,550	10,547	9,745	7,789	10,318	93,881	0	0	0
13086	10,550	10,545	10,547	9,660	7,673	10,254	93,300	0	0	0
13087	10,555	10,565	10,560	9,835	7,900	10,341	94,092	0	0	0
13088	10,575	10,570	10,572	10,105	8,210	10,430	94,908	0	0	0
13089	10,565	10,565	10,565	10,015	8,124	10,431	94,913	0	0	0
13090	10,575	10,575	10,575	9,795	7,960	10,429	94,892	0	0	0

HALDEN HB-201,HB-202,(HB-201 HOLE DIA.=3.492, HB-202 HOLE DIA.=3.496.)

NO	DIA.(X) (MM)	DIA.(Y) (MM)	DIA.(AV) (MM)	HEIGHT (MM)	WEIGHT (GRAM)	DENSITY G/CC)	DENSI(T.D) (PERCENT)	DIA.&.DENSI.	JUDGE DIA.(AV)	JUDGE DENSI
13091	10.555	10.550	10.552	9.755	7.772	10.273	93.480	O	O	O
13092	10.610	10.605	10.607	9.780	8.102	10.558	96.067	X	X	X
13093	10.575	10.575	10.575	10.060	8.173	10.425	94.854	O	O	O
13094	10.555	10.560	10.557	9.860	7.904	10.325	93.951	O	O	O
13095	10.565	10.560	10.562	9.905	7.980	10.366	94.321	O	O	O
13096	10.560	10.565	10.562	9.810	7.873	10.326	93.961	O	O	O
13097	10.565	10.560	10.562	10.125	8.252	10.485	95.408	O	O	O
13098	10.545	10.550	10.547	9.705	7.758	10.319	93.894	O	O	O
13099	10.560	10.550	10.555	9.995	8.075	10.411	94.732	O	O	O
13100	10.560	10.575	10.567	10.170	8.302	10.491	95.458	O	O	O
13101	10.560	10.570	10.565	9.780	7.841	10.310	93.817	O	O	O
13102	10.555	10.555	10.555	9.795	7.874	10.360	94.268	O	O	O
13103	10.560	10.560	10.560	9.745	7.787	10.287	93.606	O	O	O
13104	10.565	10.560	10.562	9.730	7.783	10.292	93.653	O	O	O
13105	10.575	10.575	10.575	10.145	8.275	10.466	95.231	O	O	O
13106	10.565	10.550	10.557	9.785	7.852	10.336	94.051	O	O	O
13107	10.570	10.570	10.570	9.905	7.967	10.332	94.016	O	O	O
13108	10.565	10.575	10.570	9.900	7.962	10.331	94.005	O	O	O
13109	10.575	10.570	10.572	10.170	8.309	10.488	95.437	O	O	O
13110	10.575	10.580	10.577	9.910	7.924	10.255	93.312	O	O	O
13111	10.565	10.560	10.562	10.140	8.265	10.486	95.417	O	O	O
13112	10.550	10.555	10.552	9.935	8.023	10.412	94.744	O	O	O
13113	10.555	10.555	10.555	9.865	7.931	10.361	94.274	O	O	O
13114	10.560	10.550	10.555	9.900	7.944	10.341	94.093	O	O	O
13115	10.540	10.545	10.542	9.630	7.636	10.247	93.240	O	O	O
13116	10.565	10.565	10.565	10.075	8.186	10.448	95.066	O	O	O
13117	10.565	10.570	10.567	10.130	8.267	10.488	95.432	O	O	O
13118	10.555	10.550	10.552	9.765	7.810	10.313	93.840	O	O	O
13119	10.565	10.570	10.567	9.760	7.827	10.308	93.792	O	O	O
13120	10.565	10.570	10.567	9.870	7.927	10.323	93.927	O	O	O
13121	10.575	10.565	10.570	10.115	8.238	10.461	95.188	O	O	O
13122	10.555	10.555	10.555	9.730	7.650	10.133	92.200	X	O	X
13123	10.555	10.550	10.552	9.860	7.924	10.362	94.289	O	O	O
13124	10.560	10.555	10.557	10.080	8.217	10.499	95.531	X	O	X
13125	10.560	10.560	10.560	10.025	8.107	10.410	94.721	O	O	O
13126	10.560	10.565	10.562	9.885	7.968	10.371	94.370	O	O	O
13127	10.570	10.570	10.570	10.045	8.132	10.399	94.621	O	O	O
13128	10.560	10.555	10.557	9.850	7.886	10.312	93.832	O	O	O
13129	10.560	10.575	10.567	10.180	8.325	10.510	95.628	X	O	X
13130	10.550	10.560	10.555	9.730	7.732	10.241	93.189	O	O	O
13131	10.570	10.570	10.570	9.980	8.076	10.395	94.584	O	O	O
13132	10.550	10.545	10.547	9.690	7.699	10.256	93.325	O	O	O
13133	10.570	10.570	10.570	9.950	7.998	10.326	93.954	O	O	O
13134	10.560	10.560	10.560	9.930	8.018	10.394	94.581	O	O	O
13135	10.540	10.555	10.547	9.595	7.581	10.200	92.808	O	O	O
13136	10.555	10.555	10.555	9.950	8.004	10.366	94.326	O	O	O
13137	10.550	10.555	10.552	9.915	7.980	10.377	94.427	O	O	O
13138	10.545	10.550	10.547	9.690	7.713	10.275	93.495	O	O	O
13139	10.555	10.550	10.552	9.660	7.679	10.251	93.273	O	O	O
13140	10.555	10.555	10.555	9.635	7.633	10.210	92.906	O	O	O

HALDEN HB-201,HB-202,(HB-201 HOLE DIA.=3.492, HB-202 HOLE DIA.=3.496,)

NO	DIA.(X) (MM)	DIA.(Y) (MM)	DIA.(AV) (MM)	HEIGHT (MM)	WEIGHT (GRAM)	DENSITY G/CC)	DENSI(T.D) (PERCENT)	DIA.&. DENSI	JUDGE DIA.(AV)	JUDGE DENSI
I3141	10.575	10.575	10.575	10.060	7.994	10.196	92.777	O	O	O
I3142	10.560	10.555	10.557	9.890	7.807	10.167	92.515	O	O	O
I3143	10.550	10.560	10.555	9.695	7.523	10.001	90.998	X	O	X
I3144	10.575	10.570	10.572	10.055	7.985	10.195	92.768	O	O	O
I3145	10.550	10.555	10.552	9.755	7.595	10.039	91.351	X	O	X
I3146	10.555	10.550	10.552	9.975	7.901	10.213	92.927	O	O	O
I3147	10.560	10.565	10.562	9.765	7.640	10.067	91.602	X	O	X
I3148	10.550	10.555	10.552	9.950	7.867	10.194	92.761	O	O	O
I3149	10.570	10.565	10.567	9.825	7.698	10.071	91.633	X	O	X
I3150	10.570	10.565	10.567	9.890	7.810	10.150	92.353	X	O	X
I3151	10.565	10.565	10.565	9.735	7.723	10.202	92.834	O	O	O
I3152	10.555	10.560	10.557	9.765	7.653	10.095	91.856	X	O	X
I3153	10.575	10.575	10.575	9.920	7.833	10.132	92.196	X	O	X
I3154	10.560	10.565	10.562	9.820	7.721	10.117	92.052	X	O	X
I3155	10.570	10.575	10.572	10.160	8.106	10.242	93.197	O	O	O
I3156	10.540	10.545	10.542	9.605	7.436	10.005	91.035	X	O	X
I3157	10.550	10.545	10.547	9.685	7.542	10.052	91.469	X	O	X
I3158	10.560	10.560	10.560	10.165	8.140	10.308	93.791	O	O	O
I3159	10.570	10.575	10.572	9.960	7.850	10.119	92.073	X	O	X
I3160	10.575	10.575	10.575	9.920	7.806	10.097	91.879	X	O	X
I3161	10.545	10.550	10.547	9.985	7.925	10.244	93.215	O	O	O
I3162	10.565	10.570	10.567	10.080	8.017	10.221	93.007	O	O	O
I3163	10.575	10.575	10.575	10.165	8.125	10.256	93.320	O	O	O
I3164	10.550	10.550	10.550	9.610	7.420	9.962	90.646	X	O	X
I3165	10.555	10.560	10.557	9.875	7.760	10.122	92.098	X	O	X
I3166	10.565	10.560	10.562	9.790	7.673	10.085	91.761	X	O	X
I3167	10.570	10.570	10.570	10.055	8.010	10.233	93.108	O	O	O
I3168	10.555	10.555	10.555	9.865	7.776	10.158	92.431	X	O	X
I4001	10.610	10.610	10.610	9.825	7.982	10.348	94.159	X	X	O
I4002	10.620	10.620	10.620	9.965	8.117	10.353	94.201	X	X	O
I4003	10.600	10.605	10.602	9.765	7.935	10.367	94.332	X	X	O
I4004	10.610	10.600	10.605	9.710	7.882	10.351	94.184	X	X	O
I4005	10.610	10.615	10.612	9.750	7.928	10.352	94.194	X	X	O
I4006	10.610	10.620	10.615	9.800	7.970	10.348	94.158	X	X	O
I4007	10.560	10.565	10.562	9.885	7.802	10.155	92.404	X	O	X
I4008	10.610	10.615	10.612	9.640	7.817	10.324	93.939	X	X	O
I4009	10.610	10.610	10.610	9.865	8.022	10.358	94.245	X	X	O
I4010	10.615	10.615	10.615	9.790	7.961	10.347	94.148	X	X	O
I4011	10.620	10.615	10.617	9.750	7.914	10.323	93.928	X	X	O
I4012	10.610	10.605	10.607	9.645	7.817	10.329	93.990	X	X	O
I4013	10.600	10.615	10.607	9.715	7.885	10.344	94.122	X	X	O
I4014	10.605	10.610	10.607	9.690	7.862	10.341	94.090	X	X	O
I4015	10.600	10.600	10.600	9.660	7.829	10.346	94.137	X	X	O
I4016	10.610	10.615	10.612	9.795	7.974	10.364	94.303	X	X	O
I4017	10.600	10.605	10.602	9.700	7.866	10.346	94.140	X	X	O
I4018	10.550	10.550	10.550	9.575	7.391	9.960	90.623	X	O	X

	AVERAGE	STANDERD DEVIATION
DIAMETER (MM)	10.553	0.0204581
WEIGHT (G)	8.130	0.3014641
DENSITY(G/CC)	10.340	0.0917499
DENSITY (PER)	94.089	0.8340752

GOKAKU PELLET	300 (KO)
FUGOKAKU PELLET	46 (KO)
TOTAL WEIGHT	2812.993 (G)
TOTAL HEIGHT	3506.265 (MM)

HALDEN HB-33 KENMA PELLET

NO	DIA.(X) (MM)	DIA.(Y) (MM)	DIA.(AV) (MM)	HEIGHT (MM)	WEIGHT (GRAM)	DENSITY (G/CC)	DENSI(T,D) (PERCENT)	DIA.&.DENSI.	JUDGE DIA.(AV)	JUDGE DENSI
HC 1	10.540	10.540	10.540	10.430	9.408	10.361	94.276	0	0	0
HC 2	10.540	10.540	10.540	10.200	9.178	10.336	94.049	0	0	0
HC 3	10.550	10.550	10.550	10.260	9.223	10.306	93.778	0	0	0
HC 4	10.550	10.550	10.550	10.450	9.457	10.375	94.405	0	0	0
HC 5	10.540	10.540	10.540	10.100	9.059	10.303	93.751	0	0	0
HC 6	10.540	10.540	10.540	10.250	9.241	10.356	94.232	0	0	0
HC 7	10.540	10.540	10.540	10.280	9.218	10.300	93.722	0	0	0
HC 8	10.540	10.540	10.540	9.820	8.753	10.240	93.173	0	0	0
HC 9	10.540	10.540	10.540	10.070	9.021	10.291	93.637	0	0	0
HC 10	10.540	10.540	10.540	10.070	9.028	10.299	93.709	0	0	0
HC 11	10.540	10.540	10.540	9.990	8.965	10.309	93.802	0	0	0
HC 12	10.540	10.540	10.540	9.990	8.885	10.217	92.965	0	0	0
HC 13	10.540	10.540	10.540	10.370	9.349	10.356	94.228	0	0	0
HC 14	10.530	10.530	10.530	10.140	9.037	10.257	93.331	0	0	0
HC 15	10.540	10.540	10.540	10.450	9.409	10.342	94.105	0	0	0
HC 16	10.540	10.540	10.540	10.250	9.191	10.300	93.722	0	0	0
HC 17	10.530	10.530	10.530	10.100	9.042	10.303	93.753	0	0	0
HC 18	10.540	10.540	10.540	10.040	9.015	10.315	93.855	0	0	0
HC 19	10.550	10.550	10.550	10.090	9.094	10.334	94.028	0	0	0
HC 20	10.540	10.540	10.540	9.920	8.901	10.308	93.791	0	0	0
HC 21	10.540	10.540	10.540	10.320	9.319	10.373	94.381	0	0	0
HC 22	10.540	10.540	10.540	10.050	9.016	10.305	93.771	0	0	0
HC 23	10.540	10.540	10.540	10.230	9.167	10.293	93.660	0	0	0
HC 24	10.540	10.540	10.540	10.120	9.068	10.293	93.658	0	0	0
HC 25	10.540	10.540	10.540	10.060	9.035	10.317	93.875	0	0	0
HC 26	10.540	10.540	10.540	10.170	9.128	10.310	93.813	0	0	0
HC 27	10.540	10.540	10.540	10.340	9.287	10.317	93.875	0	0	0
HC 28	10.540	10.540	10.540	10.020	8.948	10.258	93.343	0	0	0
HC 29	10.540	10.540	10.540	10.280	9.242	10.327	93.966	0	0	0
HC 30	10.540	10.540	10.540	10.160	9.091	10.278	93.525	0	0	0
HC 31	10.540	10.540	10.540	9.970	8.941	10.302	93.739	0	0	0
HC 32	10.540	10.540	10.540	10.590	9.613	10.426	94.871	0	0	0
HC 33	10.540	10.540	10.540	10.150	9.118	10.319	93.896	0	0	0
HC 34	10.540	10.540	10.540	10.120	9.056	10.279	93.534	0	0	0
HC 35	10.540	10.540	10.540	9.980	8.980	10.336	94.053	0	0	0
HC 36	10.540	10.540	10.540	10.240	9.173	10.290	93.630	0	0	0
HC 37	10.530	10.530	10.530	10.280	9.249	10.354	94.217	0	0	0
HC 38	10.540	10.540	10.540	10.090	9.048	10.301	93.730	0	0	0
HC 39	10.540	10.540	10.540	10.310	9.301	10.363	94.291	0	0	0
HC 40	10.540	10.540	10.540	10.140	9.110	10.320	93.906	0	0	0
HC 41	10.540	10.540	10.540	10.370	9.330	10.335	94.036	0	0	0
HC 42	10.530	10.530	10.530	10.010	8.881	10.211	92.914	0	0	0
HC 43	10.540	10.540	10.540	10.170	9.119	10.300	93.721	0	0	0
HC 44	10.540	10.540	10.540	10.320	9.282	10.331	94.007	0	0	0
HC 45	10.540	10.540	10.540	10.260	9.202	10.302	93.743	0	0	0
HC 46	10.540	10.540	10.540	10.170	9.123	10.304	93.762	0	0	0
HC 47	10.540	10.540	10.540	9.850	8.822	10.289	93.621	0	0	0
HC 48	10.540	10.540	10.540	10.070	9.028	10.299	93.709	0	0	0
HC 49	10.540	10.540	10.540	9.960	8.894	10.258	93.340	0	0	0
HC 50	10.540	10.540	10.540	10.150	9.118	10.319	93.896	0	0	0

HALDEN HB-33 KENMA PELLET

NO	DIA.(X) (MM)	DIA.(Y) (MM)	DIA.(AV) (MM)	HEIGHT (MM)	WEIGHT (GRAM)	DENSITY (G/CC)	DENSI(T,D) (PERCENT)	DIA.&. DENSI.	J U D G E DIA.(AV)	DENSI
1051	10.540	10.540	10.540	10.220	9.162	10.298	93.701	0	0	0
1052	10.540	10.540	10.540	9.940	8.879	10.261	93.371	0	0	0
1053	10.540	10.540	10.540	9.920	8.880	10.283	93.570	0	0	0
1054	10.540	10.540	10.540	10.080	9.042	10.304	93.761	0	0	0
1055	10.540	10.540	10.540	9.890	8.824	10.250	93.263	0	0	0
1056	10.540	10.540	10.540	10.120	9.080	10.307	93.782	0	0	0
1057	10.530	10.530	10.530	10.300	9.251	10.337	94.054	0	0	0
1058	10.540	10.540	10.540	10.250	9.247	10.363	94.293	0	0	0
1059	10.550	10.550	10.550	10.180	9.130	10.283	93.564	0	0	0
1060	10.540	10.540	10.540	9.930	8.849	10.237	93.149	0	0	0
1061	10.530	10.530	10.530	10.080	9.019	10.298	93.701	0	0	0
1062	10.540	10.540	10.540	10.220	9.161	10.297	93.691	0	0	0
1063	10.540	10.540	10.540	9.720	8.610	10.176	92.596	0	0	0
1064	10.540	10.540	10.540	10.330	9.292	10.332	94.017	0	0	0
1065	10.540	10.540	10.540	10.010	8.964	10.287	93.604	0	0	0
1066	10.540	10.540	10.540	10.070	9.029	10.300	93.720	0	0	0
1067	10.540	10.540	10.540	10.060	8.986	10.261	93.366	0	0	0
1068	10.540	10.540	10.540	9.900	8.749	10.152	92.376	X	0	X
1069	10.540	10.540	10.540	9.770	8.654	10.176	92.592	0	0	0
1070	10.540	10.540	10.540	9.880	8.852	10.293	93.653	0	0	0
1071	10.550	10.550	10.550	9.960	8.834	10.170	92.535	0	0	0
1072	10.540	10.540	10.540	9.900	8.827	10.243	93.200	0	0	0
1073	10.540	10.540	10.540	10.130	9.091	10.309	93.803	0	0	0
1074	10.540	10.540	10.540	9.880	8.793	10.224	93.029	0	0	0
1075	10.540	10.540	10.540	10.100	9.056	10.300	93.720	0	0	0
1076	10.540	10.540	10.540	10.060	9.016	10.295	93.678	0	0	0
1077	10.550	10.550	10.550	9.980	8.940	10.271	93.457	0	0	0
1078	10.550	10.550	10.550	9.870	8.835	10.264	93.391	0	0	0
1079	10.540	10.540	10.540	9.890	8.820	10.245	93.220	0	0	0
1080	10.550	10.550	10.550	10.290	9.228	10.282	93.555	0	0	0

	AVERAGE	STANDERD DEVIATION
DIAMETER (MM)	10.540	0.0076879
WEIGHT (G)	9.066	0.1891724
DENSITY(G/CC)	10.295	0.0474753
DENSITY (PER)	93.678	0.4305585

GOKAKU PELLET	79 (KO)
FUGOKAKU PELLET	1 (KO)
TOTAL WEIGHT	725.263 (G)
TOTAL HEIGHT	809.150 (MM)

HALDEN HB-35

NO	DIA.(X) (MM)	DIA.(Y) (MM)	DIA.(AV) (MM)	HEIGHT (MM)	WEIGHT (GRAM)	DENSITY (G/CC)	DENSI(T,D) (PERCENT)	DIA.&.DENSI.	J U D G E DIA.(AV)	J U D G E DENSI
1	10.580	10.580	10.580	9.910	8.823	10.150	92.359	X	0	X
2	10.580	10.580	10.580	9.930	8.858	10.170	92.539	0	0	0
3	10.580	10.580	10.580	10.090	9.018	10.189	92.713	0	0	0
4	10.560	10.560	10.560	10.120	9.099	10.289	93.622	0	0	0
5	10.560	10.560	10.560	9.860	8.848	10.270	93.446	0	0	0
6	10.580	10.580	10.580	10.120	9.040	10.184	92.663	0	0	0
7	10.570	10.570	10.570	10.120	9.092	10.262	93.373	0	0	0
8	10.580	10.580	10.580	9.900	8.848	10.189	92.715	0	0	0
9	10.570	10.570	10.570	10.090	9.015	10.205	92.858	0	0	0
10	10.580	10.580	10.580	10.190	9.093	10.173	92.564	0	0	0
11	10.570	10.570	10.570	9.830	8.831	10.262	93.374	0	0	0
12	10.580	10.580	10.580	10.000	8.925	10.175	92.584	0	0	0
13	10.580	10.580	10.580	9.890	8.892	10.250	93.270	0	0	0
14	10.580	10.580	10.580	9.890	8.893	10.252	93.281	0	0	0
15	10.580	10.580	10.580	10.060	9.016	10.217	92.969	0	0	0
16	10.580	10.580	10.580	9.990	8.909	10.167	92.511	0	0	0
17	10.580	10.580	10.580	9.850	8.783	10.166	92.502	0	0	0
18	10.560	10.560	10.560	9.730	8.629	10.150	92.353	X	0	X
19	10.580	10.580	10.580	10.070	9.035	10.229	93.073	0	0	0
20	10.590	10.590	10.590	9.910	8.878	10.194	92.759	X	X	0
21	10.580	10.580	10.580	9.860	8.868	10.254	93.302	0	0	0
22	10.580	10.580	10.580	9.820	8.830	10.252	93.282	0	0	0
23	10.570	10.570	10.570	10.070	9.070	10.288	93.610	0	0	0
24	10.580	10.580	10.580	10.140	9.044	10.168	92.521	0	0	0
25	10.570	10.570	10.570	10.120	9.092	10.262	93.373	0	0	0
26	10.570	10.570	10.570	9.940	8.857	10.178	92.610	0	0	0
27	10.570	10.570	10.570	9.900	8.813	10.168	92.523	0	0	0
28	10.580	10.580	10.580	9.940	8.886	10.192	92.738	0	0	0
29	10.570	10.570	10.570	9.280	8.290	10.206	92.862	0	0	0
30	10.560	10.560	10.560	9.960	8.953	10.287	93.603	0	0	0
31	10.570	10.570	10.570	10.030	8.995	10.244	93.207	0	0	0
32	10.570	10.570	10.570	9.820	8.734	10.159	92.443	X	0	X
33	10.580	10.580	10.580	10.020	9.012	10.254	93.300	0	0	0
34	10.580	10.580	10.580	10.060	9.003	10.203	92.835	0	0	0
35	10.580	10.580	10.580	9.810	8.805	10.233	93.113	0	0	0
36	10.580	10.580	10.580	10.080	9.080	10.269	93.443	0	0	0
37	10.570	10.570	10.570	9.900	8.817	10.173	92.565	0	0	0
38	10.580	10.580	10.580	9.950	8.941	10.245	93.218	0	0	0
39	10.560	10.560	10.560	10.130	9.034	10.205	92.861	0	0	0
40	10.590	10.590	10.590	10.040	8.947	10.140	92.267	X	X	X
41	10.550	10.550	10.550	9.870	8.801	10.224	93.031	0	0	0
42	10.580	10.580	10.580	9.960	8.939	10.232	93.103	0	0	0
43	10.560	10.560	10.560	9.960	8.942	10.274	93.488	0	0	0
44	10.580	10.580	10.580	9.950	8.952	10.257	93.332	0	0	0
45	10.570	10.570	10.570	10.000	8.995	10.274	93.488	0	0	0
46	10.550	10.550	10.550	9.920	8.879	10.263	93.382	0	0	0
47	10.560	10.560	10.560	10.040	8.907	10.152	92.378	X	0	X
48	10.580	10.580	10.580	10.090	9.025	10.197	92.785	0	0	0
49	10.570	10.570	10.570	10.110	9.098	10.279	93.527	0	0	0
50	10.580	10.580	10.580	10.020	8.937	10.168	92.523	0	0	0

HALDEN HB-35

NO	DIA.(X) (MM)	DIA.(Y) (MM)	DIA.(AV) (MM)	HEIGHT (MM)	WEIGHT (GRAM)	DENSITY (G/CC)	DENSI(T.D) (PERCENT)	DIA.&. DENSI	JUDGE DIA.(AV)	JUDGE DENSI
51	10.580	10.580	10.580	9.990	8.910	10.168	92.522	0	0	0
52	10.580	10.580	10.580	9.890	8.876	10.232	93.103	0	0	0
53	10.560	10.560	10.560	9.970	8.932	10.253	93.290	0	0	0
54	10.570	10.570	10.570	9.780	8.790	10.267	93.417	0	0	0
55	10.580	10.580	10.580	9.760	8.760	10.233	93.113	0	0	0
56	10.560	10.560	10.560	9.590	8.583	10.243	93.205	0	0	0
57	10.570	10.570	10.570	9.990	8.905	10.182	92.645	0	0	0
58	10.570	10.570	10.570	10.160	9.140	10.275	93.495	0	0	0
59	10.590	10.590	10.590	10.030	9.017	10.230	93.082	X	X	0
60	10.580	10.580	10.580	10.050	8.970	10.175	92.587	0	0	0
61	10.580	10.580	10.580	10.060	9.046	10.251	93.279	0	0	0
62	10.570	10.570	10.570	9.730	8.749	10.271	93.460	0	0	0
63	10.570	10.570	10.570	10.010	9.009	10.280	93.539	0	0	0
64	10.570	10.570	10.570	9.830	8.846	10.279	93.533	0	0	0
65	10.580	10.580	10.580	10.100	9.080	10.249	93.258	0	0	0
66	10.580	10.580	10.580	9.780	8.707	10.150	92.359	X	0	X
67	10.570	10.570	10.570	9.640	8.567	10.152	92.372	X	0	X
68	10.570	10.570	10.570	9.840	8.829	10.249	93.258	0	0	0
69	10.560	10.560	10.560	9.940	8.905	10.252	93.289	0	0	0
70	10.590	10.590	10.590	10.020	8.942	10.155	92.400	X	X	X
71	10.590	10.590	10.590	10.140	9.050	10.156	92.407	X	X	X
72	10.580	10.580	10.580	10.050	9.055	10.272	93.465	0	0	0
73	10.570	10.570	10.570	9.830	8.817	10.246	93.226	0	0	0
74	10.580	10.580	10.580	9.860	8.793	10.167	92.513	0	0	0
75	10.580	10.580	10.580	10.040	9.035	10.259	93.351	0	0	0
76	10.580	10.580	10.580	9.990	8.913	10.172	92.553	0	0	0
77	10.580	10.580	10.580	10.010	9.017	10.270	93.445	0	0	0
78	10.560	10.560	10.560	9.830	8.813	10.260	93.361	0	0	0
79	10.570	10.570	10.570	9.930	8.873	10.207	92.871	0	0	0
80	10.580	10.580	10.580	9.750	8.694	10.166	92.506	0	0	0
81	10.570	10.570	10.570	9.970	8.962	10.267	93.426	0	0	0
82	10.570	10.570	10.570	9.910	8.829	10.176	92.598	0	0	0
83	10.570	10.570	10.570	10.080	9.056	10.262	93.373	0	0	0
84	10.580	10.580	10.580	9.800	8.818	10.259	93.346	0	0	0
85	10.580	10.580	10.580	10.000	8.911	10.159	92.439	X	0	X
86	10.570	10.570	10.570	9.970	8.862	10.153	92.383	X	0	X
87	10.570	10.570	10.570	10.020	8.941	10.192	92.741	0	0	0
88	10.570	10.570	10.570	10.020	9.018	10.280	93.539	0	0	0
89	10.580	10.580	10.580	10.130	9.068	10.205	92.858	0	0	0
90	10.580	10.580	10.580	10.080	9.027	10.209	92.898	0	0	0
91	10.570	10.570	10.570	9.980	8.993	10.293	93.655	0	0	0
92	10.580	10.580	10.580	9.710	8.728	10.248	93.251	0	0	0
93	10.590	10.590	10.590	9.840	8.767	10.139	92.253	X	X	X
94	10.580	10.580	10.580	9.830	8.743	10.140	92.269	X	0	X
95	10.580	10.580	10.580	9.950	8.880	10.175	92.582	0	0	0
96	10.560	10.560	10.560	10.020	9.006	10.286	93.592	0	0	0
97	10.580	10.580	10.580	9.240	8.171	10.084	91.752	X	0	X
98	10.570	10.570	10.570	9.900	8.909	10.279	93.531	0	0	0
99	10.580	10.580	10.580	10.140	9.136	10.271	93.462	0	0	0
100	10.580	10.580	10.580	9.730	8.687	10.179	92.622	0	0	0

HALDEN HB-35

NO	DIA.(X) (MM)	DIA.(Y) (MM)	DIA.(AV) (MM)	HEIGHT (MM)	WEIGHT (GRAM)	DENSITY (G/CC)	DENSI(T.D) (PERCENT)	DIA.&.DENSI.	J DIA.(AV)	U D G E DENSI
101	10.590	10.590	10.590	9.970	8.994	10.140	92.262	X	X	X
102	10.580	10.580	10.580	9.990	8.993	10.263	93.383	O	O	O
103	10.580	10.580	10.580	9.250	8.190	10.096	91.865	X	O	X
104	10.580	10.580	10.580	9.900	8.917	10.269	93.438	O	O	O
105	10.580	10.580	10.580	9.960	9.944	11.387	~~103.612~~ 103.6	O	O	O
106	10.580	10.580	10.580	9.960	8.986	10.266	93.592	O	O	O
107	10.580	10.580	10.580	10.100	9.079	10.248	93.247	O	O	O
108	10.590	10.590	10.590	10.030	8.985	10.193	92.751	X	X	O
109	10.580	10.580	10.580	9.990	9.012	10.285	93.581	O	O	O
110	10.580	10.580	10.580	9.950	8.982	10.261	93.363	O	O	O
111	10.570	10.570	10.570	10.010	8.910	10.167	92.512	O	O	O
112	10.590	10.590	10.590	10.000	9.017	10.260	93.362	X	X	O
113	10.580	10.580	10.580	10.050	9.011	10.222	93.010	O	O	O
114	10.580	10.580	10.580	9.650	8.585	10.261	93.370	O	O	O
115	10.580	10.580	10.580	10.020	8.939	10.171	92.544	O	O	O
116	10.590	10.590	10.590	10.020	8.969	10.185	92.679	X	X	O
117	10.580	10.580	10.580	10.020	8.975	10.212	92.917	O	O	O
118	10.580	10.580	10.580	10.050	9.060	10.277	93.516	O	O	O
119	10.580	10.580	10.580	9.950	8.962	10.269	93.436	O	O	O
120	10.570	10.570	10.570	9.890	8.854	10.226	93.048	O	O	O
121	10.580	10.580	10.580	9.930	8.948	10.273	93.479	O	O	O
122	10.570	10.570	10.570	9.930	8.845	10.174	92.578	O	O	O
123	10.570	10.570	10.570	10.000	8.938	10.209	92.895	O	O	O
124	10.580	10.580	10.580	9.850	8.872	10.269	93.439	O	O	O
125	10.570	10.570	10.570	10.070	9.010	10.220	92.991	O	O	O
126	10.580	10.580	10.580	10.070	9.016	10.207	92.877	O	O	O
127	10.560	10.560	10.560	9.990	8.903	10.199	92.800	O	O	O
128	10.580	10.580	10.580	9.990	8.984	10.253	93.290	O	O	O
129	10.580	10.580	10.580	9.780	8.745	10.195	92.763	O	O	O
130	10.570	10.570	10.570	10.100	9.064	10.250	93.270	O	O	O
131	10.580	10.580	10.580	10.130	9.106	10.248	93.247	O	O	O
132	10.570	10.570	10.570	9.950	8.853	10.163	92.475	O	O	O
133	10.580	10.580	10.580	9.570	8.511	10.140	92.266	X	O	X
134	10.570	10.570	10.570	9.990	8.914	10.192	92.739	O	O	O
135	10.590	10.590	10.590	9.850	8.814	10.183	92.653	X	X	O
136	10.580	10.580	10.580	10.120	9.094	10.244	93.216	O	O	O
137	10.580	10.580	10.580	9.980	8.931	10.202	92.833	O	O	O
138	10.580	10.580	10.580	9.910	8.920	10.262	93.375	O	O	O
139	10.590	10.590	10.590	9.900	8.912	10.244	93.209	X	X	O
140	10.590	10.590	10.590	9.890	8.829	10.159	92.434	X	X	X
141	10.560	10.560	10.560	9.960	8.937	10.269	93.436	O	O	O
141	10.560	10.560	10.560	10.140	9.142	10.317	93.879	O	O	O
143	10.590	10.590	10.590	10.140	9.093	10.204	92.846	X	X	O
144	10.570	10.570	10.570	10.040	8.985	10.222	93.011	O	O	O
145	10.580	10.580	10.580	9.940	8.960	10.277	93.510	O	O	O
146	10.580	10.580	10.580	9.940	8.895	10.202	92.831	O	O	O
147	10.590	10.590	10.590	9.920	8.938	10.253	93.292	X	X	O
148	10.590	10.590	10.590	10.030	8.958	10.163	92.473	X	X	O
149	10.580	10.580	10.580	9.820	8.752	10.161	92.458	O	O	O
150	10.580	10.580	10.580	9.930	8.867	10.180	92.633	O	O	O

HALDEN HB-35

NO	DIA.(X) (MM)	DIA.(Y) (MM)	DIA.(AV) (MM)	HEIGHT (MM)	WEIGHT (GRAM)	DENSITY (G/CC)	DENSI(T,D) (PERCENT)	DIA.&. DENSI.	JUDGE DIA.(AV)	JUDGE DENSI
151	10.580	10.580	10.580	10.140	9.126	10.260	93.359	O	O	O
152	10.580	10.580	10.580	9.950	8.934	10.237	93.145	O	O	O
153	10.560	10.560	10.560	9.540	8.453	10.141	92.276	X	O	X
154	10.580	10.580	10.580	10.110	9.101	10.263	93.381	O	O	O
155	10.570	10.570	10.570	10.070	9.022	10.233	93.115	O	O	O
156	10.580	10.580	10.580	9.980	8.947	10.221	92.999	O	O	O
157	10.560	10.560	10.560	9.960	8.836	10.153	92.380	X	O	X
158	10.570	10.570	10.570	10.010	8.993	10.262	93.373	O	O	O
159	10.580	10.580	10.580	9.940	8.851	10.152	92.372	X	O	X
160	10.580	10.580	10.580	9.950	8.863	10.155	92.404	X	O	X
161	10.580	10.580	10.580	10.120	9.036	10.179	92.622	O	O	O
162	10.580	10.580	10.580	9.940	8.889	10.195	92.769	O	O	O
163	10.570	10.570	10.570	9.940	8.809	10.123	92.108	X	O	X
164	10.580	10.580	10.580	10.210	9.111	10.173	92.566	O	O	O
165	10.580	10.580	10.580	10.000	8.937	10.189	92.709	O	O	O
166	10.560	10.560	10.560	10.340	9.172	10.150	92.361	X	O	X
167	10.570	10.570	10.570	9.860	8.779	10.170	92.541	O	O	O
168	10.560	10.560	10.560	9.230	8.200	10.169	92.528	O	O	O
169	10.570	10.570	10.570	9.840	8.839	10.261	93.364	O	O	O
170	10.580	10.580	10.580	9.820	8.832	10.254	93.303	O	O	O
171	10.580	10.580	10.580	9.890	8.843	10.194	92.756	O	O	O
172	10.570	10.570	10.570	10.010	8.989	10.257	93.332	O	O	O
173	10.570	10.570	10.570	9.870	8.865	10.259	93.353	O	O	O
174	10.570	10.570	10.570	9.940	8.888	10.214	92.935	O	O	O
175	10.580	10.580	10.580	9.830	8.734	10.130	92.174	X	O	X
176	10.570	10.570	10.570	10.000	8.993	10.272	93.467	O	O	O
177	10.570	10.570	10.570	10.250	9.155	10.201	92.825	O	O	O
178	10.570	10.570	10.570	9.960	8.867	10.169	92.528	O	O	O
179	10.580	10.580	10.580	9.760	8.709	10.173	92.570	O	O	O
180	10.580	10.580	10.580	9.970	8.885	10.160	92.447	X	O	X
181	10.580	10.580	10.580	9.830	8.843	10.256	93.324	O	O	O
182	10.570	10.570	10.570	9.980	8.974	10.271	93.457	O	O	O
183	10.570	10.570	10.570	9.990	8.980	10.267	93.425	O	O	O
184	10.570	10.570	10.570	10.000	8.918	10.186	92.687	O	O	O
185	10.580	10.580	10.580	10.060	9.039	10.243	93.206	O	O	O
186	10.580	10.580	10.580	10.050	8.980	10.187	92.690	O	O	O
187	10.580	10.580	10.580	10.020	8.971	10.207	92.875	O	O	O
188	10.580	10.580	10.580	9.920	8.892	10.219	92.988	O	O	O
189	10.570	10.570	10.570	10.090	9.077	10.275	93.497	O	O	O
190	10.570	10.570	10.570	10.280	9.094	10.104	91.937	X	O	X
191	10.570	10.570	10.570	9.910	8.880	10.235	93.133	O	O	O
192	10.570	10.570	10.570	9.860	8.815	10.212	92.921	O	O	O
193	10.580	10.580	10.580	9.920	8.842	10.162	92.465	O	O	O
194	10.570	10.570	10.570	9.740	8.727	10.235	93.129	O	O	O
195	10.580	10.580	10.580	10.080	9.079	10.268	93.433	O	O	O
196	10.580	10.580	10.580	10.030	8.995	10.224	93.031	O	O	O
197	10.570	10.570	10.570	10.180	9.075	10.182	92.648	O	O	O
198	10.570	10.570	10.570	9.990	8.898	10.174	92.572	O	O	O
199	10.580	10.580	10.580	9.740	8.669	10.148	92.335	X	O	X
200	10.580	10.580	10.580	9.880	8.804	10.159	92.441	X	O	X

HALDEN HB-35												
										J U D G E		
NO	DIA.(X) (MM)	DIA.(Y) (MM)	DIA.(AV) (MM)	HEIGHT (MM)	WEIGHT (GRAM)	DENSITY (G/CC)	DENSI(T.D) (PERCENT)	DIA.&.DENSI.	DIA.(AV)	DENSI	
201	10.580	10.580	10.580	9.910	8.794	10.117	92.056	X	0	X	

	AVERAGE	STANDERD DEVIATION
DIAMETER (MM)	10.576	0.0088905
WEIGHT (G)	8.912	0.1745541
DENSITY(G/CC)	10.221	0.0957188
DENSITY (PER)	92.999	0.8702691

GOKAKU PELLET	160 (KO)
FUGOKAKU PELLET	41 (KO)
TOTAL WEIGHT	1791.304 (G)
TOTAL HEIGHT	1999.790 (MM)

HALDEN-T.C HB-41-21 HOLE DIA.=1.97(MM) KENMA PELLET

NO	DIA.(X) (MM)	DIA.(Y) (MM)	DIA.(AV) (MM)	HEIGHT (MM)	WEIGHT (GRAM)	DENSITY (G/CC)	DENSI(T.D) (PERCENT)	DIA.&.DENSI.	JUDGE DIA.(AV)	JUDGE DENSI
1	10.540	10.540	10.540	9.740	8.453	10.332	94.003	0	0	0
2	10.530	10.530	10.530	9.750	8.409	10.288	93.612	0	0	0
3	10.530	10.530	10.530	9.940	8.594	10.313	93.838	0	0	0
4	10.520	10.520	10.520	9.910	8.534	10.292	93.650	0	0	0
5	10.530	10.530	10.530	9.830	8.512	10.329	93.985	0	0	0
6	10.530	10.530	10.530	10.200	8.863	10.364	94.303	0	0	0
7	10.530	10.530	10.530	9.960	8.595	10.293	93.660	0	0	0
8	10.530	10.530	10.530	9.860	8.493	10.274	93.489	0	0	0
9	10.530	10.530	10.530	9.830	8.459	10.265	93.400	0	0	0
10	10.530	10.530	10.530	9.850	8.533	10.333	94.025	0	0	0
11	10.530	10.530	10.530	9.630	8.338	10.328	93.981	0	0	0
12	10.530	10.530	10.530	9.990	8.624	10.297	93.693	0	0	0
13	10.520	10.520	10.520	9.800	8.391	10.234	93.117	0	0	0
14	10.530	10.530	10.530	9.920	8.604	10.346	94.137	0	0	0
15	10.530	10.530	10.530	9.410	8.043	10.197	92.780	0	0	0
16	10.530	10.530	10.530	9.780	8.468	10.328	93.978	0	0	0
17	10.530	10.530	10.530	9.880	8.504	10.267	93.420	0	0	0
18	10.530	10.530	10.530	9.910	8.545	10.285	93.586	0	0	0
19	10.530	10.530	10.530	9.860	8.521	10.308	93.798	0	0	0
20	10.530	10.530	10.530	9.950	8.632	10.348	94.158	0	0	0
21	10.530	10.530	10.530	10.030	8.680	10.322	93.924	0	0	0
22	10.530	10.530	10.530	9.560	8.254	10.299	93.717	0	0	0
23	10.540	10.540	10.540	9.810	8.519	10.338	94.069	0	0	0
24	10.520	10.520	10.520	9.820	8.443	10.276	93.503	0	0	0
25	10.530	10.530	10.530	10.230	8.898	10.374	94.397	0	0	0
26	10.530	10.530	10.530	9.610	8.314	10.320	93.906	0	0	0
27	10.530	10.530	10.530	9.680	8.362	10.305	93.763	0	0	0
28	10.530	10.530	10.530	9.710	8.348	10.255	93.316	0	0	0
29	10.530	10.530	10.530	9.640	8.306	10.278	93.523	0	0	0
30	10.530	10.530	10.530	9.860	8.501	10.284	93.577	0	0	0

	AVERAGE	STANDERD DEVIATION
DIAMETER (MM)	10.530	0.0060254
WEIGHT (G)	8.491	0.1686856
DENSITY(G/CC)	10.302	0.0383430
DENSITY (PER)	93.744	0.3472433

GOKAKU	PELLET	30 (KO)
FUGOKAKU	PELLET	0 (KO)
TOTAL	WEIGHT	254.740 (G)
TOTAL	HEIGHT	294.950 (MM)

HALDEN CYOUSEI PELLET								JUDGE		
NO	DIA.(X) (MM)	DIA.(Y) (MM)	DIA.(AV) (MM)	HEIGHT (MM)	WEIGHT (GRAM)	DENSITY (G/CC)	DENSI(T.D) (PERCENT)	DIA.&.DENSI.	DIA.(AV)	DENSI
1	10.510	10.510	10.510	4.670	4.207	10.435	94.954	O	O	O
2	10.510	10.510	10.510	4.430	3.977	10.402	94.651	O	O	O
3	10.600	10.600	10.600	4.820	4.395	10.381	94.462	X	X	O
4	10.490	10.490	10.490	4.640	4.190	10.501	95.549	X	X	X
5	10.580	10.580	10.580	4.540	4.124	10.384	94.490	O	O	O
6	10.590	10.590	10.590	2.950	2.458	9.533	86.743	X	X	X

	AVERAGE	STANDERD DEVIATION
DIAMETER (MM)	10.547	0.0487890
WEIGHT (G)	3.892	0.7153207
DENSITY(G/CC)	10.273	0.3651211
DENSITY (PER)	93.475	3.3219980

GOKAKU PELLET	3 (KO)
FUGOKAKU PELLET	3 (KO)
TOTAL WEIGHT	23.351 (G)
TOTAL HEIGHT	26.050 (MM)

HALDEN-T.C HB-42-11 HOLE DIA.=1.96(MM) MI-KENMA PELLET

NO	DIA.(X) (MM)	DIA.(Y) (MM)	DIA.(AV) (MM)	HEIGHT (MM)	WEIGHT (GRAM)	DENSITY (G/CC)	DENSI(T.D) (PERCENT)	DIA.&. DENSI.	JUDGE DIA.(AV)	JUDGE DENSI
101	10.580	10.580	10.580	10.040	8.840	10.395	94.590	0	0	0
102	10.580	10.580	10.580	10.070	8.872	10.402	94.649	0	0	0
103	10.580	10.560	10.575	10.080	8.863	10.377	94.414	0	0	0
104	10.570	10.570	10.570	10.080	8.897	10.441	95.008	0	0	0
105	10.580	10.580	10.580	10.060	8.861	10.399	94.626	0	0	0
106	10.560	10.570	10.565	9.970	8.763	10.408	94.705	0	0	0
107	10.560	10.570	10.565	9.820	8.603	10.374	94.399	0	0	0
108	10.570	10.570	10.570	9.950	8.742	10.394	94.575	0	0	0
109	10.580	10.580	10.580	10.180	8.984	10.419	94.806	0	0	0
110	10.560	10.570	10.565	10.100	8.914	10.451	95.094	0	0	0
111	10.570	10.570	10.570	9.910	8.681	10.363	94.295	0	0	0
112	10.580	10.570	10.575	10.050	8.853	10.411	94.728	0	0	0
113	10.570	10.570	10.570	9.930	8.725	10.395	94.582	0	0	0
114	10.570	10.570	10.570	9.890	8.675	10.377	94.421	0	0	0
115	10.580	10.580	10.580	10.130	8.942	10.422	94.830	0	0	0
116	10.570	10.570	10.570	9.880	8.659	10.368	94.343	0	0	0
117	10.580	10.570	10.575	10.050	8.850	10.407	94.696	0	0	0
118	10.580	10.570	10.575	9.860	8.694	10.421	94.823	0	0	0
119	10.570	10.570	10.570	9.960	8.753	10.396	94.599	0	0	0
120	10.560	10.550	10.555	9.840	8.593	10.362	94.282	0	0	0
121	10.570	10.570	10.570	9.940	8.727	10.386	94.508	0	0	0
122	10.580	10.580	10.580	10.000	8.806	10.397	94.604	0	0	0
123	10.570	10.570	10.570	9.970	8.764	10.399	94.623	0	0	0
124	10.560	10.560	10.560	9.930	8.736	10.428	94.887	0	0	0
125	10.570	10.570	10.570	9.910	8.707	10.394	94.578	0	0	0
126	10.580	10.570	10.575	9.860	8.646	10.364	94.300	0	0	0
127	10.580	10.580	10.580	10.160	8.966	10.419	94.803	0	0	0

	AVERAGE	STANDERD DEVIATION
DIAMETER (MM)	10.572	0.0081938
WEIGHT (G)	8.778	0.1106974
DENSITY(G/CC)	10.400	0.0231853
DENSITY (PER)	94.629	0.2077911

GOKAKU	PELLET	27 ~~26~~ (KO)
FUGOKAKU	PELLET	0 (KO)
TOTAL	WEIGHT	237.075 ~~228.253~~ (G)
TOTAL	HEIGHT	~~250.540~~ 265.572 (MM)

HALDEN HB-301, HB-302, PELLET DATA

NO	DIA.(X) (MM)	DIA.(Y) (MM)	DIA.(AV) (MM)	HEIGHT (MM)	WEIGHT (GRAM)	DENSITY (G/CC)	DENSI(T.D) (PERCENT)	DIA.&.DENSI.	J U D G E DIA.(AV)	DENSI
1	10.555	10.560	10.557	9.705	8.630	10.194	92.756	O	O	O
2	10.600	10.600	10.600	10.650	9.805	10.466	95.233	X	X	O
3	10.580	10.575	10.577	10.425	9.564	10.474	95.309	O	O	O
4	10.565	10.565	10.565	10.170	9.251	10.411	94.734	O	O	O
5	10.575	10.575	10.575	10.295	9.409	10.440	94.998	O	O	O
6	10.585	10.585	10.585	10.390	9.506	10.431	94.916	X	X	O
7	10.565	10.570	10.567	10.060	9.120	10.371	94.372	O	O	O
8	10.570	10.580	10.575	10.305	9.907	10.982	99.928	X	O	X
9	10.560	10.550	10.555	9.885	8.933	10.364	94.303	O	O	O
10	10.570	10.570	10.570	10.190	9.273	10.406	94.682	O	O	O
11	10.580	10.575	10.577	10.295	9.417	10.444	95.033	O	O	O
12	10.565	10.570	10.567	10.175	9.258	10.409	94.714	O	O	O
13	10.590	10.585	10.587	10.295	9.375	10.378	94.430	X	X	O
14	10.585	10.585	10.585	10.460	9.560	10.420	94.814	X	X	O
15	10.570	10.570	10.570	10.105	9.174	10.381	94.462	O	O	O
16	10.570	10.570	10.570	10.345	9.465	10.461	95.190	O	O	O
17	10.565	10.570	10.567	10.165	9.242	10.401	94.643	O	O	O
18	10.570	10.570	10.570	10.345	9.457	10.453	95.109	O	O	O
19	10.590	10.580	10.585	10.295	9.381	10.389	94.535	X	X	O
20	10.550	10.550	10.550	9.915	8.967	10.382	94.464	O	O	O
21	10.565	10.565	10.565	10.230	9.325	10.433	94.930	O	O	O
22	10.550	10.550	10.550	9.955	8.904	10.267	93.422	O	O	O
23	10.550	10.550	10.550	9.975	9.035	10.397	94.606	O	O	O
24	10.580	10.580	10.580	10.315	9.412	10.413	94.753	O	O	O
25	10.585	10.585	10.585	10.330	9.423	10.400	94.636	X	X	O
26	10.575	10.580	10.577	10.385	9.495	10.439	94.987	O	O	O
27	10.580	10.580	10.580	10.375	9.485	10.433	94.934	O	O	O
28	10.565	10.565	10.565	10.065	9.123	10.375	94.401	O	O	O
29	10.560	10.560	10.560	10.125	9.207	10.418	94.794	O	O	O
30	10.580	10.580	10.580	10.330	9.416	10.403	94.655	O	O	O
31	10.555	10.550	10.552	10.020	9.055	10.368	94.343	O	O	O
32	10.565	10.565	10.565	10.040	9.105	10.380	94.450	O	O	O
33	10.550	10.550	10.550	9.960	9.012	10.386	94.508	O	O	O
34	10.560	10.565	10.562	9.960	8.992	10.339	94.074	O	O	O
35	10.580	10.580	10.580	10.450	9.580	10.462	95.194	O	O	O
36	10.570	10.570	10.570	10.090	9.155	10.375	94.407	O	O	O
37	10.570	10.570	10.570	10.175	9.245	10.389	94.536	O	O	O
38	10.575	10.575	10.575	10.440	9.558	10.458	95.157	O	O	O
39	10.565	10.565	10.565	10.100	9.174	10.396	94.598	O	O	O
40	10.570	10.575	10.572	10.155	9.234	10.393	94.565	O	O	O
41	10.575	10.580	10.577	10.260	9.353	10.409	94.710	O	O	O
42	10.580	10.580	10.580	10.135	9.197	10.357	94.238	O	O	O
43	10.560	10.560	10.560	10.160	9.266	10.448	95.071	O	O	O
44	10.565	10.565	10.565	10.205	9.285	10.414	94.755	O	O	O
45	10.560	10.560	10.560	10.100	9.179	10.412	94.740	O	O	O
46	10.580	10.585	10.582	10.185	9.252	10.363	94.290	O	O	O
47	10.540	10.540	10.540	9.920	8.881	10.296	93.689	O	O	O
48	10.545	10.545	10.545	9.765	8.745	10.290	93.635	O	O	O
49	10.555	10.555	10.555	9.910	8.934	10.339	94.075	O	O	O
50	10.570	10.570	10.570	10.300	9.380	10.413	94.748	O	O	O

HALDEN HB-301, HB-302, PELLET DATA

NO	DIA.(X) (MM)	DIA.(Y) (MM)	DIA.(AV) (MM)	HEIGHT (MM)	WEIGHT (GRAM)	DENSITY (G/CC)	DENSI(T.D) (PERCENT)	DIA.&.DENSI.	JUDGE DIA.(AV)	JUDGE DENSI
51	10.570	10.570	10.570	10.165	9.234	10.367	94.517	0	0	0
52	10.570	10.575	10.572	10.225	9.305	10.401	94.638	0	0	0
53	10.580	10.580	10.580	10.180	9.244	10.364	94.300	0	0	0
54	10.570	10.570	10.570	10.320	9.432	10.450	95.088	0	0	0
55	10.570	10.570	10.570	10.355	9.465	10.451	95.098	0	0	0
56	10.565	10.570	10.567	10.165	9.253	10.414	94.756	0	0	0
57	10.560	10.560	10.560	10.040	9.108	10.393	94.571	0	0	0
58	10.575	10.575	10.575	10.290	9.376	10.409	94.710	0	0	0
59	10.555	10.555	10.555	9.940	8.993	10.376	94.409	0	0	0
60	10.570	10.570	10.570	10.035	9.082	10.349	94.169	0	0	0
61	10.560	10.560	10.560	9.960	9.009	10.363	94.297	0	0	0
62	10.585	10.580	10.582	10.410	9.521	10.433	94.928	0	0	0
63	10.570	10.565	10.567	10.255	9.358	10.439	94.987	0	0	0
64	10.580	10.585	10.582	10.190	9.265	10.372	94.376	0	0	0
65	10.575	10.580	10.577	10.335	9.442	10.431	94.915	0	0	0
66	10.570	10.570	10.570	10.190	9.236	10.364	94.304	0	0	0
67	10.595	10.595	10.595	10.605	9.747	10.458	95.163	X	X	0
69	10.590	10.590	10.590	10.465	9.579	10.426	94.867	X	X	0
70	10.560	10.570	10.565	10.220	9.301	10.416	94.778	0	0	0
71	10.600	10.600	10.600	10.575	9.715	10.444	95.030	X	X	0
72	10.530	10.530	10.530	9.655	8.505	10.151	92.370	X	0	X
73	10.530	10.530	10.530	9.760	8.709	10.283	93.564	0	0	0
74	10.570	10.565	10.567	10.015	9.119	10.417	94.787	0	0	0
75	10.570	10.570	10.570	10.335	9.445	10.449	95.081	0	0	0
76	10.550	10.555	10.552	9.935	8.975	10.365	94.313	0	0	0
77	10.570	10.570	10.570	10.380	9.506	10.471	95.279	0	0	0
78	10.580	10.580	10.580	10.505	9.639	10.471	95.277	0	0	0
79	10.575	10.575	10.575	10.240	9.338	10.417	94.789	0	0	0
80	10.570	10.570	10.570	10.120	9.184	10.377	94.424	0	0	0
81	10.575	10.575	10.575	10.120	9.181	10.364	94.304	0	0	0
82	10.565	10.570	10.567	10.070	9.138	10.382	94.464	0	0	0
83	10.565	10.565	10.565	10.015	9.057	10.351	94.187	0	0	0
84	10.575	10.580	10.577	10.315	9.423	10.430	94.909	0	0	0
85	10.575	10.580	10.577	10.345	9.457	10.438	94.974	0	0	0
86	10.575	10.575	10.575	10.120	9.192	10.376	94.417	0	0	0
87	10.550	10.555	10.552	10.010	9.085	10.413	94.751	0	0	0
88	10.575	10.570	10.572	10.320	9.420	10.432	94.922	0	0	0
89	10.560	10.560	10.560	10.260	9.348	10.438	94.975	0	0	0
90	10.590	10.590	10.590	10.210	9.332	10.412	94.737	X	X	0
91	10.595	10.590	10.592	10.680	9.840	10.489	95.439	X	X	0
92	10.580	10.580	10.580	10.320	9.425	10.423	94.838	0	0	0
93	10.565	10.565	10.565	9.980	9.033	10.360	94.268	0	0	0
94	10.550	10.550	10.550	9.800	8.769	10.272	93.466	0	0	0
95	10.555	10.550	10.552	9.905	8.940	10.356	94.230	0	0	0
96	10.580	10.580	10.580	10.385	9.502	10.442	95.012	0	0	0
97	10.575	10.575	10.575	10.330	9.407	10.403	94.654	0	0	0
98	10.575	10.575	10.575	10.290	9.350	10.380	94.448	0	0	0
99	10.575	10.575	10.575	10.425	9.549	10.463	95.205	0	0	0
100	10.575	10.575	10.575	10.460	9.597	10.480	95.362	0	0	0
101	10.570	10.570	10.570	10.270	9.373	10.436	94.955	0	0	0

N841-77-57

HALDEN HB-301, HB-302, PELLET DATA

NO	DIA.(X) (MM)	DIA.(Y) (MM)	DIA.(AV) (MM)	HEIGHT (MM)	WEIGHT (GRAM)	DENSITY G/CC)	DENSI(T.D) (PERCENT)	DIA.&. DENSI.	J U D G E DIA.(AV)	J U D G E DENSI
102	10.575	10.575	10.575	10.495	9.637	10.489	95.439	0	0	0
103	10.435	10.435	10.435	9.900	8.850	10.490	95.450	X	X	0
104	10.575	10.575	10.575	10.185	9.234	10.357	94.241	0	0	0
105	10.545	10.550	10.547	9.845	8.672	10.350	94.175	0	0	0
106	10.570	10.570	10.570	10.245	9.339	10.423	94.842	0	0	0
107	10.590	10.590	10.590	10.345	9.434	10.388	94.519	X	X	0
108	10.580	10.580	10.580	10.155	9.244	10.389	94.533	0	0	0
109	10.530	10.530	10.530	9.910	8.862	10.304	93.762	0	0	0
110	10.570	10.570	10.570	10.115	9.206	10.407	94.697	0	0	0
111	10.560	10.555	10.557	9.890	8.913	10.331	93.999	0	0	0
112	10.585	10.585	10.585	10.370	9.477	10.420	94.810	X	X	0
113	10.585	10.575	10.580	10.175	9.249	10.374	94.398	0	0	0
114	10.575	10.575	10.575	10.260	9.352	10.412	94.745	0	0	0
115	10.585	10.585	10.585	10.390	9.496	10.420	94.816	X	X	0
116	10.545	10.550	10.547	9.960	9.034	10.417	94.784	0	0	0
117	10.565	10.570	10.567	10.065	9.121	10.367	94.335	0	0	0
118	10.570	10.565	10.567	9.985	9.029	10.345	94.135	0	0	0
119	10.575	10.575	10.575	10.330	9.425	10.422	94.836	0	0	0
120	10.580	10.575	10.577	10.325	9.415	10.411	94.736	0	0	0
121	10.560	10.560	10.560	9.975	9.040	10.383	94.479	0	0	0
122	10.580	10.580	10.580	10.325	9.430	10.423	94.842	0	0	0
123	10.575	10.570	10.572	10.365	9.478	10.450	95.091	0	0	0
124	10.565	10.565	10.565	10.200	9.285	10.419	94.801	0	0	0
125	10.560	10.560	10.560	9.930	8.978	10.359	94.257	0	0	0
126	10.575	10.575	10.575	10.185	9.265	10.392	94.557	0	0	0
127	10.580	10.575	10.577	10.375	9.495	10.449	95.079	0	0	0
128	10.585	10.580	10.582	10.365	9.483	10.436	94.961	0	0	0
129	10.580	10.575	10.577	10.205	9.280	10.383	94.479	0	0	0
130	10.575	10.570	10.572	10.355	9.429	10.407	94.691	0	0	0
131	10.560	10.560	10.560	10.140	9.221	10.418	94.797	0	0	0
132	10.565	10.565	10.565	10.075	9.149	10.394	94.576	0	0	0
133	10.570	10.570	10.570	10.060	9.103	10.347	94.152	0	0	0
134	10.580	10.580	10.580	10.175	9.257	10.383	94.479	0	0	0
135	10.545	10.545	10.545	9.815	8.834	10.342	94.104	0	0	0
136	10.585	10.580	10.582	10.205	9.281	10.375	94.400	0	0	0
137	10.590	10.590	10.590	10.455	9.570	10.426	94.869	X	X	0
138	10.565	10.570	10.567	10.175	9.258	10.409	94.714	0	0	0
139	10.590	10.580	10.585	10.410	9.542	10.451	95.092	X	X	0
140	10.590	10.600	10.595	10.500	9.620	10.426	94.865	X	X	0
141	10.560	10.560	10.560	9.980	9.034	10.371	94.368	0	0	0
142	10.565	10.565	10.565	10.040	9.096	10.370	94.357	0	0	0
143	10.585	10.590	10.587	10.380	9.501	10.431	94.913	X	X	0
144	10.590	10.590	10.590	10.415	9.529	10.421	94.827	X	X	0
145	10.590	10.590	10.590	10.465	9.584	10.431	94.917	X	X	0
146	10.580	10.580	10.580	10.330	9.426	10.414	94.756	0	0	0
147	10.540	10.535	10.537	9.825	8.704	10.194	92.757	0	0	0
148	10.570	10.570	10.570	10.275	9.376	10.434	94.939	0	0	0
149	10.580	10.580	10.580	10.385	9.454	10.389	94.532	0	0	0
150	10.580	10.580	10.580	10.445	9.571	10.457	95.151	0	0	0
151	10.565	10.565	10.565	10.125	9.213	10.415	94.765	0	0	0

HALDEN HB-301, HB-302, PELLET DATA

NO	DIA.(X) (MM)	DIA.(Y) (MM)	DIA.(AV) (MM)	HEIGHT (MM)	WEIGHT (GRAM)	DENSITY (G/CC)	DENSI(T.D) (PERCENT)	DIA.&. DENSI.	JUDGE DIA.(AV)	JUDGE DENSI
152	10.565	10.570	10.567	10.220	9.312	10.423	94.845	0	0	0
153	10.570	10.580	10.575	10.125	9.169	10.345	94.134	0	0	0
154	10.580	10.580	10.580	10.355	9.456	10.421	94.827	0	0	0
155	10.560	10.560	10.560	9.995	9.048	10.372	94.372	0	0	0
156	10.565	10.570	10.567	10.120	9.198	10.398	94.613	0	0	0
157	10.590	10.590	10.590	10.420	9.531	10.419	94.801	X	X	0
158	10.575	10.580	10.577	10.280	9.374	10.412	94.738	0	0	0
159	10.580	10.580	10.580	10.290	9.391	10.415	94.772	0	0	0
160	10.560	10.560	10.560	10.065	9.125	10.367	94.511	0	0	0
161	10.590	10.590	10.590	10.425	9.542	10.426	94.865	X	X	0
162	10.575	10.575	10.575	10.390	9.520	10.466	95.236	0	0	0
163	10.580	10.580	10.580	10.330	9.446	10.436	94.957	0	0	0
164	10.565	10.575	10.570	10.240	9.337	10.426	94.869	0	0	0
165	10.555	10.555	10.555	9.980	8.987	10.327	93.967	0	0	0
166	10.570	10.580	10.575	10.260	9.358	10.419	94.806	0	0	0
167	10.570	10.580	10.575	10.100	9.170	10.372	94.378	0	0	0
168	10.580	10.580	10.580	10.300	9.386	10.400	94.629	0	0	0
169	10.525	10.530	10.527	9.640	8.509	10.177	92.602	0	0	0
170	10.575	10.575	10.575	10.410	9.544	10.473	95.293	0	0	0
171	10.575	10.575	10.575	10.135	9.214	10.386	94.502	0	0	0
172	10.530	10.530	10.530	9.685	8.618	10.254	93.306	0	0	0
173	10.570	10.570	10.570	10.015	9.068	10.354	94.212	0	0	0
174	10.575	10.575	10.575	10.390	9.520	10.466	95.236	0	0	0
175	10.575	10.575	10.575	10.320	9.433	10.441	95.008	0	0	0
176	10.570	10.570	10.570	10.070	9.130	10.368	94.337	0	0	0
177	10.560	10.560	10.560	9.980	9.050	10.389	94.536	0	0	0
178	10.555	10.560	10.557	10.145	9.239	10.438	94.980	0	0	0
179	10.575	10.575	10.575	10.365	9.475	10.442	95.016	0	0	0
180	10.580	10.580	10.580	10.305	9.408	10.419	94.805	0	0	0
181	10.580	10.580	10.580	10.265	9.362	10.409	94.710	0	0	0
182	10.570	10.570	10.570	10.270	9.384	10.448	95.067	0	0	0
183	10.565	10.565	10.565	9.875	8.886	10.300	93.724	0	0	0
184	10.580	10.580	10.580	10.340	9.441	10.420	94.814	0	0	0
185	10.580	10.580	10.580	10.375	9.481	10.429	94.894	0	0	0
186	10.570	10.570	10.570	10.200	9.282	10.405	94.681	0	0	0
187	10.565	10.570	10.567	10.260	9.323	10.395	94.586	0	0	0
188	10.570	10.570	10.570	10.220	9.320	10.428	94.882	0	0	0
1001	10.580	10.575	10.577	10.245	9.244	10.302	93.744	0	0	0
1002	10.525	10.525	10.525	9.910	8.916	10.377	94.423	0	0	0
1003	10.565	10.570	10.567	9.880	8.844	10.241	93.189	0	0	0
1004	10.545	10.550	10.547	10.270	9.309	10.409	94.711	0	0	0
1005	10.565	10.565	10.565	9.890	8.891	10.290	93.634	0	0	0
1006	10.565	10.560	10.562	9.750	8.797	10.333	94.023	0	0	0
1007	10.520	10.525	10.522	9.425	8.465	10.366	94.322	0	0	0
1008	10.545	10.550	10.547	9.820	8.806	10.299	93.713	0	0	0
1009	10.550	10.550	10.550	10.135	9.145	10.357	94.241	0	0	0
1010	10.530	10.530	10.530	9.825	8.802	10.324	93.935	0	0	0
1011	10.540	10.540	10.540	9.835	8.823	10.318	93.885	0	0	0
1012	10.570	10.565	10.567	10.085	9.087	10.308	93.797	0	0	0
1013	10.550	10.550	10.550	9.950	8.923	10.294	93.669	0	0	0

HALDEN HB-301, HB-302, PELLET DATA

NO	DIA.(X) (MM)	DIA.(Y) (MM)	DIA.(AV) (MM)	HEIGHT (MM)	WEIGHT (GRAM)	DENSITY (G/CC)	DENSI(T.D) (PERCENT)	DIA.&.DENSI.	J U D G E DIA.(AV)	J U D G E DENSI
11014	10.575	10.575	10.575	9.640	8.530	10.110	91.995	X	0	X
11015	10.550	10.550	10.550	10.055	9.062	10.345	94.131	0	0	0
11016	10.590	10.590	10.590	10.265	9.271	10.288	93.612	X	X	0
11017	10.590	10.590	10.590	10.095	9.085	10.252	93.284	X	X	0
11018	10.570	10.575	10.572	9.690	8.834	10.421	94.825	0	0	0
11019	10.540	10.545	10.542	9.920	8.900	10.314	93.845	0	0	0
11020	10.520	10.520	10.520	9.650	8.615	10.308	93.792	0	0	0
11021	10.540	10.540	10.540	9.745	8.698	10.266	93.412	0	0	0
11022	10.560	10.560	10.560	9.745	8.676	10.201	92.822	0	0	0
11023	10.585	10.585	10.585	10.315	9.385	10.374	94.392	X	X	0
11024	10.560	10.555	10.557	9.920	8.903	10.288	93.609	0	0	0
11025	10.530	10.535	10.532	9.805	8.783	10.317	93.880	0	0	0
11026	10.525	10.530	10.527	9.550	8.450	10.202	92.829	0	0	0
11027	10.555	10.555	10.555	10.005	8.956	10.266	93.408	0	0	0
11028	10.510	10.515	10.512	9.555	8.497	10.283	93.564	0	0	0
11029	10.520	10.520	10.520	9.480	8.408	10.241	93.186	0	0	0
11030	10.565	10.570	10.567	9.770	8.713	10.204	92.846	0	0	0
11031	10.535	10.540	10.537	9.775	8.720	10.265	93.405	0	0	0
11032	10.500	10.500	10.500	9.665	8.633	10.353	94.200	0	0	0
11033	10.545	10.550	10.547	9.820	8.782	10.271	93.458	0	0	0
11034	10.550	10.550	10.550	10.185	9.220	10.391	94.546	0	0	0
11035	10.555	10.555	10.555	10.025	9.022	10.320	93.908	0	0	0
11036	10.585	10.585	10.585	10.415	9.434	10.327	93.970	X	X	0
11037	10.590	10.590	10.590	10.255	9.270	10.297	93.693	X	X	0
11038	10.520	10.520	10.520	9.945	8.937	10.375	94.401	0	0	0
11039	10.560	10.560	10.560	9.920	8.912	10.293	93.659	0	0	0
11040	10.575	10.580	10.577	9.905	8.895	10.255	93.312	0	0	0
11041	10.615	10.615	10.615	10.545	9.587	10.306	93.779	X	X	0
11042	10.475	10.480	10.477	9.230	8.094	10.209	92.896	X	X	0
11043	10.540	10.540	10.540	9.915	8.905	10.329	93.990	0	0	0
11044	10.595	10.600	10.597	10.330	9.403	10.354	94.211	X	X	0
11045	10.555	10.555	10.555	9.940	8.912	10.282	93.559	0	0	0
11046	10.530	10.525	10.527	9.680	8.642	10.293	93.659	0	0	0
11047	10.585	10.600	10.592	10.140	9.105	10.224	93.029	X	X	0
11048	10.600	10.600	10.600	10.165	9.223	10.316	93.869	X	X	0
11049	10.555	10.555	10.555	9.505	8.385	10.118	92.069	X	0	X
11050	10.565	10.560	10.562	10.290	9.369	10.426	94.865	0	0	0
11051	10.555	10.560	10.557	9.685	8.638	10.224	93.034	0	0	0
11052	10.585	10.585	10.585	10.260	9.271	10.303	93.747	X	X	0
11053	10.505	10.510	10.507	9.505	8.423	10.257	93.328	0	0	0
11054	10.520	10.525	10.522	10.050	9.075	10.419	94.809	0	0	0
11055	10.575	10.570	10.572	10.050	9.032	10.272	93.466	0	0	0
11056	10.590	10.595	10.592	10.230	9.297	10.347	94.152	X	X	0
11058	10.590	10.585	10.587	10.400	9.494	10.403	94.660	X	X	0
11059	10.565	10.565	10.565	9.920	8.920	10.293	93.654	0	0	0
11060	10.560	10.555	10.557	9.850	8.812	10.255	93.313	0	0	0
11061	10.490	10.490	10.490	9.300	8.184	10.220	92.997	X	X	0
11062	10.540	10.540	10.540	9.985	8.970	10.332	94.010	0	0	0
11063	10.550	10.550	10.550	10.110	9.121	10.356	94.227	0	0	0
11064	10.580	10.585	10.582	9.900	8.873	10.225	93.040	0	0	0

HALDEN HB-301, HB-302, PELLET DATA

NO	DIA.(X) (MM)	DIA.(Y) (MM)	DIA.(AV) (MM)	HEIGHT (MM)	WEIGHT (GRAM)	DENSITY (G/CC)	DENSI(T.D) (PERCENT)	DIA.&.DENSI.	J U D G E DIA.(AV)	J U D G E DENSI
I1065	10.555	10.560	10.557	9.905	8.895	10.294	93.667	0	0	0
I1066	10.540	10.545	10.542	9.905	8.880	10.306	93.776	0	0	0
I1067	10.600	10.605	10.602	10.210	9.270	10.318	93.885	X	X	0
I1068	10.555	10.555	10.555	9.750	8.691	10.223	93.023	0	0	0
I1069	10.545	10.555	10.550	10.030	9.028	10.332	94.013	0	0	0
I1070	10.565	10.565	10.565	9.740	8.705	10.231	93.092	0	0	0
I1071	10.570	10.570	10.570	10.195	9.190	10.307	93.788	0	0	0
I1072	10.560	10.560	10.560	10.055	9.068	10.332	94.015	0	0	0
I1073	10.540	10.540	10.540	10.220	9.250	10.408	94.708	0	0	0
I1074	10.585	10.590	10.587	9.910	8.874	10.206	92.868	X	X	0
I1075	10.525	10.525	10.525	9.580	8.517	10.255	93.316	0	0	0
I1076	10.525	10.525	10.525	9.745	8.703	10.301	93.733	0	0	0
I1077	10.545	10.545	10.545	10.000	8.989	10.328	93.978	0	0	0
I1078	10.550	10.555	10.552	9.775	8.717	10.232	93.106	0	0	0
I1079	10.560	10.560	10.560	10.025	9.022	10.311	93.819	0	0	0
I1080	10.520	10.520	10.520	9.835	8.830	10.366	94.318	0	0	0
I1081	10.575	10.575	10.575	10.270	9.281	10.323	93.934	0	0	0
I1082	10.530	10.535	10.532	10.000	9.007	10.373	94.390	0	0	0
I1083	10.540	10.545	10.542	9.470	8.531	10.357	94.244	0	0	0
I1084	10.560	10.555	10.557	10.090	9.081	10.316	93.866	0	0	0
I1085	10.575	10.580	10.577	10.290	9.317	10.338	94.070	0	0	0
I1086	10.570	10.570	10.570	10.240	9.254	10.333	94.025	0	0	0
I1087	10.570	10.575	10.572	10.205	9.290	10.404	94.671	0	0	0
I1088	10.580	10.580	10.580	10.075	9.068	10.273	93.472	0	0	0
I1089	10.580	10.585	10.582	9.930	8.868	10.188	92.706	0	0	0
I1090	10.565	10.560	10.562	9.745	8.680	10.201	92.821	0	0	0
I1091	10.590	10.600	10.595	10.195	9.185	10.253	93.294	X	X	0
I1092	10.610	10.610	10.610	10.375	9.377	10.256	93.321	X	X	0
I1093	10.585	10.580	10.582	9.800	8.835	10.286	93.590	0	0	0
I1094	10.600	10.605	10.602	9.765	8.693	10.118	92.068	X	X	X
I1095	10.580	10.590	10.585	9.850	8.797	10.184	92.669	X	X	0
I1096	10.570	10.570	10.570	9.970	8.933	10.246	93.230	0	0	0
I1097	10.585	10.585	10.585	9.825	8.763	10.171	92.547	X	X	0
I1098	10.580	10.580	10.580	10.060	9.030	10.245	93.219	0	0	0
I1099	10.530	10.525	10.527	9.960	8.966	10.378	94.429	0	0	0
I1100	10.540	10.545	10.542	10.030	9.032	10.351	94.189	0	0	0
I1101	10.505	10.505	10.505	9.825	8.826	10.401	94.642	0	0	0
I1102	10.480	10.485	10.482	9.550	8.482	10.329	93.986	X	X	0
I1103	10.520	10.525	10.522	10.050	9.067	10.410	94.725	0	0	0
I1104	10.555	10.555	10.555	10.225	9.280	10.407	94.697	0	0	0
I1105	10.510	10.510	10.510	9.680	8.631	10.314	93.853	0	0	0
I1106	10.555	10.555	10.555	10.290	9.326	10.393	94.564	0	0	0
I1107	10.565	10.565	10.565	9.785	8.754	10.241	93.184	0	0	0
I1108	10.590	10.585	10.587	10.675	9.793	10.453	95.118	X	X	0
I1109	10.570	10.570	10.570	10.460	9.547	10.436	94.955	0	0	0
I1110	10.590	10.590	10.590	10.405	9.546	10.450	95.088	X	X	0
I1111	10.570	10.570	10.570	10.365	9.447	10.421	94.825	0	0	0
I1112	10.560	10.560	10.560	10.310	9.348	10.387	94.512	0	0	0
I1113	10.570	10.565	10.567	10.505	9.567	10.417	94.790	0	0	0
I1114	10.580	10.580	10.580	10.480	9.534	10.382	94.465	0	0	0

HALDEN HB-301, HB-302, PELLET DATA

NO	DIA.(X) (MM)	DIA.(Y) (MM)	DIA.(AV) (MM)	HEIGHT (MM)	WEIGHT (GRAM)	DENSITY (G/CC)	DENSI(T.D) (PERCENT)	DIA.&.DENSI.	JUDGE DIA.(AV)	JUDGE DENSI
1115	10.550	10.555	10.552	9.650	8.776	10.436	94.955	O	O	O
1116	10.530	10.530	10.530	9.750	8.735	10.324	93.940	O	O	O
1117	10.550	10.550	10.550	9.745	8.683	10.229	93.074	O	O	O
1118	10.600	10.600	10.600	10.215	9.204	10.244	93.215	X	X	O
1119	10.570	10.575	10.572	10.010	8.980	10.254	93.301	O	O	O
1120	10.570	10.575	10.572	10.355	9.390	10.363	94.299	O	O	O
1121	10.580	10.585	10.582	10.310	9.443	10.448	95.066	O	O	O
1122	10.580	10.580	10.580	10.520	9.572	10.383	94.480	O	O	O
1123	10.545	10.545	10.545	10.105	9.130	10.381	94.457	O	O	O
1124	10.560	10.560	10.560	10.095	9.117	10.347	94.147	O	O	O
1125	10.590	10.585	10.587	10.585	9.675	10.416	94.773	X	X	O
1126	10.570	10.575	10.572	10.125	9.201	10.386	94.507	O	O	O
1127	10.535	10.535	10.535	10.040	9.038	10.363	94.292	O	O	O
1128	10.570	10.575	10.572	10.040	9.035	10.286	93.591	O	O	O
1129	10.590	10.595	10.592	10.140	9.298	10.441	95.001	X	X	O
1130	10.580	10.585	10.582	10.520	9.566	10.372	94.376	O	O	O
1131	10.560	10.570	10.565	10.300	9.382	10.425	94.859	O	O	O
1132	10.585	10.585	10.585	10.030	9.176	10.432	94.921	X	X	O
1133	10.570	10.565	10.567	10.570	9.615	10.405	94.678	O	O	O
1134	10.580	10.585	10.582	10.385	9.470	10.402	94.647	O	O	O
1135	10.590	10.590	10.590	10.465	9.580	10.427	94.877	X	X	O
1136	10.580	10.580	10.580	10.505	9.589	10.417	94.783	O	O	O
1137	10.620	10.625	10.622	10.355	9.355	10.228	93.062	X	X	O
1138	10.590	10.590	10.590	10.360	9.505	10.451	95.092	X	X	O
1139	10.600	10.605	10.602	10.120	9.180	10.309	93.803	X	X	O
1140	10.565	10.565	10.565	10.335	9.373	10.380	94.446	O	O	O
1141	10.575	10.570	10.572	10.620	9.668	10.403	94.661	O	O	O
1142	10.550	10.545	10.547	10.060	9.083	10.369	94.347	O	O	O
1143	10.590	10.595	10.592	10.270	9.405	10.427	94.874	X	X	O
1144	10.590	10.590	10.590	10.075	9.235	10.442	95.013	X	X	O
1145	10.580	10.580	10.580	9.915	8.869	10.210	92.901	O	O	O
1146	10.555	10.555	10.555	10.010	9.078	10.400	94.633	O	O	O
1147	10.580	10.580	10.580	10.420	9.532	10.440	94.991	O	O	O
1148	10.555	10.555	10.555	10.150	9.174	10.365	94.310	O	O	O
1149	10.570	10.565	10.567	10.275	9.294	10.347	94.154	O	O	O
1150	10.555	10.560	10.557	9.955	8.966	10.324	93.939	O	O	O
1151	10.575	10.570	10.572	10.500	9.541	10.384	94.488	O	O	O
1152	10.555	10.555	10.555	10.085	9.157	10.412	94.744	O	O	O
1153	10.575	10.575	10.575	10.590	9.647	10.405	94.678	O	O	O
1154	10.565	10.565	10.565	10.400	9.439	10.387	94.514	O	O	O
1155	10.575	10.580	10.577	10.525	9.569	10.380	94.450	O	O	O
1156	10.575	10.580	10.577	10.040	9.025	10.264	93.398	O	O	O
1157	10.575	10.570	10.572	10.275	9.320	10.367	94.327	O	O	O
1158	10.555	10.555	10.555	10.095	9.063	10.295	93.678	O	O	O
1159	10.605	10.605	10.605	10.070	9.036	10.193	92.748	X	X	O
1160	10.560	10.555	10.557	9.950	9.008	10.377	94.427	O	O	O
1161	10.565	10.570	10.567	10.135	9.164	10.344	94.123	O	O	O
1162	10.610	10.615	10.612	10.430	9.450	10.276	93.506	X	X	O
1163	10.560	10.565	10.562	10.240	9.329	10.432	94.922	O	O	O
1164	10.590	10.590	10.590	10.240	9.328	10.377	94.418	X	X	O

HALDEN HB-301, HB-302, PELLET DATA

NO	DIA.(X) (MM)	DIA.(Y) (MM)	DIA.(AV) (MM)	HEIGHT (MM)	WEIGHT (GRAM)	DENSITY (G/CC)	DENSI(T.D) (PERCENT)	DIA.&.DENSI.	JUDGE DIA.(AV)	JUDGE DENSI
11165	10.590	10.595	10.592	10.425	9.416	10.283	93.568	X	X	O
11166	10.585	10.580	10.582	10.020	9.168	10.438	94.978	O	O	O
11167	10.560	10.560	10.560	10.250	9.292	10.385	94.498	O	O	O
11168	10.555	10.560	10.557	10.205	9.230	10.367	94.328	O	O	O
11169	10.555	10.550	10.552	10.255	9.341	10.450	95.086	O	O	O
11170	10.555	10.550	10.552	10.470	9.537	10.449	95.081	O	O	O
11171	10.575	10.570	10.572	10.405	9.488	10.421	94.824	O	O	O
11172	10.570	10.565	10.567	10.460	9.518	10.409	94.712	O	O	O

	AVERAGE	STANDERD DEVIATION
DIAMETER (MM)	10.566	0.0219827
WEIGHT (G)	9.178	0.3065832
DENSITY(G/CC)	10.366	0.0814860
DENSITY (PER)	94.321	0.7396289

GOKAKU PELLET	293 (KO)
FUGOKAKU PELLET	65 (KO)
TOTAL WEIGHT	3285.897 (G)
TOTAL HEIGHT	3626.635 (MM)

FUGOKAKU PELLET NO UCHIWAKE
DIA---------- 61
MITUDO-------- 5

V－2　サブルーチンプログラム　アウトプット

PELLET NO.	DIAMETER(X-AXIS) (MM)	DIAMETER(Y-AXIS) (MM)	HEIGHT (MM)	WEIGHT (GRAM)	DENSITY (PERCENT)
10	10.580	10.580	10.190	9.093	92.565
12	10.580	10.580	10.000	8.925	92.585
13	10.580	10.580	9.890	8.892	93.271
19	10.580	10.580	10.070	9.035	93.073
22	10.580	10.580	9.820	8.830	93.282
25	10.570	10.570	10.120	9.092	93.373
27	10.570	10.570	9.900	8.813	92.523
34	10.580	10.580	10.060	9.003	92.835
35	10.580	10.580	9.810	8.805	93.113
36	10.580	10.580	10.080	9.080	93.443
37	10.570	10.570	9.900	8.817	92.565
41	10.550	10.550	9.870	8.801	93.032
43	10.560	10.560	9.960	8.942	93.488
51	10.580	10.580	9.990	8.910	92.522
52	10.580	10.580	9.890	8.876	93.103
54	10.570	10.570	9.780	8.790	93.417
55	10.580	10.580	9.760	8.760	93.113
60	10.580	10.580	10.050	8.970	92.587
61	10.580	10.580	10.060	9.046	93.279
62	10.570	10.570	9.730	8.749	93.460
63	10.570	10.570	10.010	9.009	93.539
65	10.580	10.580	10.100	9.080	93.258
192	10.570	10.570	9.860	8.815	92.921
193	10.580	10.580	9.920	8.842	92.465
194	10.570	10.570	9.740	8.727	93.129
195	10.580	10.580	10.080	9.079	93.433
196	10.580	10.580	10.030	8.995	93.031
197	10.570	10.570	10.180	9.075	92.648
198	10.570	10.570	9.990	8.898	92.572
1001	10.540	10.540	10.430	9.408	94.276
1002	10.540	10.540	10.200	9.178	94.049
1003	10.550	10.550	10.260	9.223	93.778
1004	10.550	10.550	10.450	9.457	94.405
1005	10.540	10.540	10.100	9.059	93.751
1006	10.540	10.540	10.250	9.241	94.232
1007	10.540	10.540	10.280	9.218	93.723
1008	10.540	10.540	9.820	8.753	93.173
1009	10.540	10.540	10.070	9.021	93.637
1010	10.540	10.540	10.070	9.028	93.709
1011	10.540	10.540	9.990	8.965	93.802
1012	10.540	10.540	9.990	8.885	92.965
1013	10.540	10.540	10.370	9.349	94.228
1014	10.530	10.530	10.140	9.037	93.331
1015	10.540	10.540	10.450	9.409	94.105
1016	10.540	10.540	10.250	9.191	93.722
1017	10.530	10.530	10.100	9.042	93.753
1018	10.540	10.540	10.040	9.015	93.855
1019	10.550	10.550	10.090	9.094	94.028
1020	10.540	10.540	9.920	8.901	93.791
1021	10.540	10.540	10.320	9.319	94.381

N841-77-57

PELLET NO.	DIAMETER(X-AXIS) (MM)	DIAMETER(Y-AXIS) (MM)	HEIGHT (MM)	WEIGHT (GRAM)	DENSITY (PERCENT)
1022	10.540	10.540	10.020	9.016	93.771
1023	10.540	10.540	10.230	9.167	93.661
1024	10.540	10.540	10.120	9.068	93.658
1025	10.540	10.540	10.060	9.035	93.875
1026	10.540	10.540	10.170	9.128	93.814
1027	10.540	10.540	10.340	9.287	93.875
1028	10.540	10.540	10.020	8.948	93.344
1029	10.540	10.540	10.280	9.242	93.967
1030	10.540	10.540	10.160	9.091	93.526
1031	10.540	10.540	9.970	8.941	93.739
1032	10.540	10.540	10.590	9.613	94.871
1033	10.540	10.540	10.150	9.118	93.896
1034	10.540	10.540	10.120	9.056	93.535
1035	10.540	10.540	9.980	8.980	94.054
1036	10.540	10.540	10.240	9.173	93.630
1039	10.540	10.540	10.310	9.301	94.291
1040	10.540	10.540	10.140	9.110	93.906
1041	10.540	10.540	10.370	9.330	94.036
1042	10.530	10.530	10.010	8.881	92.914
1043	10.540	10.540	10.170	9.119	93.721
1044	10.540	10.540	10.320	9.282	94.007
1045	10.540	10.540	10.260	9.202	93.743
1046	10.540	10.540	10.170	9.123	93.762
1047	10.540	10.540	9.850	8.822	93.621
1048	10.540	10.540	10.070	9.028	93.709
1049	10.540	10.540	9.960	8.894	93.340
1050	10.540	10.540	10.150	9.118	93.896
1051	10.540	10.540	10.220	9.162	93.701
1052	10.540	10.540	9.940	8.879	93.371
1053	10.540	10.540	9.920	8.880	93.570
1054	10.540	10.540	10.080	9.042	93.761
1055	10.540	10.540	9.890	8.824	93.263
1056	10.540	10.540	10.120	9.080	93.782
1057	10.530	10.530	10.300	9.251	94.054
1058	10.540	10.540	10.250	9.247	94.293
1059	10.550	10.550	10.180	9.130	93.564
1060	10.540	10.540	9.930	8.849	93.149
1061	10.530	10.530	10.080	9.019	93.701
1062	10.540	10.540	10.220	9.161	93.691
1063	10.540	10.540	9.720	8.610	92.596
1064	10.540	10.540	10.330	9.292	94.017
1065	10.540	10.540	10.010	8.964	93.604
1066	10.540	10.540	10.070	9.029	93.720
1067	10.540	10.540	10.060	8.986	93.366
1069	10.540	10.540	9.770	8.654	92.592
1070	10.540	10.540	9.880	8.852	93.654
1071	10.550	10.550	9.960	8.834	92.535
1072	10.540	10.540	9.900	8.827	93.200
1073	10.540	10.540	10.130	9.091	93.803
1074	10.540	10.540	9.860	8.793	93.029

PELLET [illegible]-33,[illegible]-34,[illegible]-35 *** RANK-B ***

PAGE NO 1

PELLET NO.	DIAMETER(X-AXIS) (MM)	DIAMETER(Y-AXIS) (MM)	HEIGHT (MM)	WEIGHT (GRAM)	DENSITY (PERCENT)
1075	10.540	10.540	10.100	9.056	93.720
1076	10.540	10.540	10.060	9.016	93.678
1077	10.550	10.550	9.980	8.940	93.457
1078	10.530	10.550	9.870	8.835	93.391
1079	10.540	10.540	9.890	8.820	93.220
1080	10.550	10.550	10.290	9.228	93.555
2001	10.500	10.500	10.450	9.468	95.419
2002	10.500	10.500	9.630	8.656	94.682
2005	10.500	10.500	10.450	9.450	95.238
2006	10.500	10.500	10.210	9.172	94.614
2009	10.500	10.500	9.910	8.937	94.987
2010	10.500	10.500	10.420	9.357	94.573
2011	10.500	10.500	9.890	8.879	94.562
2012	10.500	10.500	9.840	8.866	94.905
9007	10.510	10.510	4.540	4.078	94.691

TOTAL HEIGHT 1153.060 (MM)
TOTAL WEIGHT 1033.829 (GRAM)

HALDEN-T.C HB-41-21 HOLE DIA.=1.97(MM) KENMA PELLET

PIN NO 1

PELLET NO.	DIAMETER(X-AXIS) (MM)	DIAMETER(Y-AXIS) (MM)	HEIGHT (MM)	WEIGHT (GRAM)	DENSITY (PERCENT)
1	10.540	10.540	9.740	8.453	93.978
2	10.530	10.530	9.750	8.409	93.577
3	10.530	10.530	9.940	8.594	93.803
4	10.520	10.520	9.910	8.534	93.616
5	10.530	10.530	9.830	8.512	93.951
6	10.530	10.530	10.200	8.863	94.268
7	10.530	10.530	9.960	8.595	93.625
8	10.530	10.530	9.860	8.493	93.455
9	10.530	10.530	9.830	8.459	93.366
10	10.530	10.530	9.850	8.533	93.991
11	10.530	10.530	9.630	8.338	93.946
12	10.530	10.530	9.990	8.624	93.659
13	10.520	10.520	9.800	8.391	93.083
14	10.530	10.530	9.920	8.604	94.102
16	10.530	10.530	9.760	8.468	93.944
17	10.530	10.530	9.680	8.504	93.386
18	10.530	10.530	9.910	8.545	93.552
19	10.530	10.530	9.860	8.521	93.763
20	10.530	10.530	9.950	8.632	94.123
21	10.530	10.530	10.030	8.680	93.890
23	10.540	10.540	9.810	8.519	94.035
24	10.520	10.520	9.820	8.443	93.468
25	10.530	10.530	10.230	8.898	94.362

T.C PELLET TOTAL HEIGHT 227.480 (MM)
T.C+SOLID TOTAL HEIGHT 1380.540 (MM)
T.C PELLET TOTAL WEIGHT 196.612 (GRAM)
T.C+SOLID TOTAL WEIGHT 1230.441 (GRAM)

PEELET NO.	DIAMETER(X-AXIS) (MM)	DIAMETER(Y-AXIS) (MM)	HEIGHT (MM)	WEIGHT (GRAM)	DENSITY (PERCENT)
2	10,580	10,580	9,930	8,858	92,539
3	10,580	10,580	10,090	9,018	92,713
4	10,560	10,560	10,120	9,099	93,622
5	10,560	10,560	9,860	8,848	93,446
7	10,570	10,570	10,120	9,092	93,373
8	10,580	10,580	9,900	8,848	92,715
9	10,570	10,570	10,090	9,015	92,858
11	10,570	10,570	9,830	8,831	93,374
14	10,580	10,580	9,890	8,893	93,281
15	10,580	10,580	10,060	9,016	92,969
16	10,580	10,580	9,990	8,909	92,511
17	10,580	10,580	9,850	8,783	92,502
21	10,580	10,580	9,860	8,868	93,302
23	10,570	10,570	10,070	9,070	93,610
24	10,580	10,580	10,140	9,044	92,521
26	10,570	10,570	9,940	8,857	92,610
28	10,580	10,580	9,940	8,886	92,738
29	10,570	10,570	9,280	8,290	92,862
30	10,560	10,560	9,960	8,953	93,603
31	10,570	10,570	10,030	8,995	93,207
33	10,580	10,580	10,020	9,012	93,300
38	10,580	10,580	9,950	8,941	93,218
39	10,560	10,560	10,130	9,034	92,861
42	10,580	10,580	9,960	8,939	93,103
44	10,580	10,580	9,950	8,952	93,332
45	10,570	10,570	10,000	8,995	93,488
46	10,550	10,550	9,920	8,879	93,382
48	10,580	10,580	10,090	9,025	92,785
49	10,570	10,570	10,110	9,098	93,527
50	10,580	10,580	10,020	8,937	92,523
53	10,560	10,560	9,970	8,932	93,290
56	10,560	10,560	9,590	8,583	93,205
57	10,570	10,570	9,990	8,905	92,645
58	10,570	10,570	10,160	9,140	93,495
64	10,570	10,570	9,830	8,846	93,533
68	10,570	10,570	9,840	8,829	93,258
69	10,560	10,560	9,940	8,905	93,289
72	10,580	10,580	10,050	9,055	93,465
73	10,570	10,570	9,830	8,817	93,226
74	10,580	10,580	9,860	8,793	92,513
75	10,580	10,580	10,040	9,035	93,351
76	10,580	10,580	9,990	8,913	92,553
77	10,580	10,580	10,010	9,017	93,445
78	10,560	10,560	9,830	8,813	93,361
79	10,570	10,570	9,930	8,873	92,871
80	10,580	10,580	9,750	8,694	92,506
82	10,570	10,570	9,910	8,829	92,598
83	10,570	10,570	10,080	9,056	93,373
84	10,580	10,580	9,800	8,818	93,346
87	10,570	10,570	10,020	8,941	92,741

N841-77-57

N841-77-57

PEELET NO.	DIAMETER(X-AXIS) (MM)	DIAMETER(Y-AXIS) (MM)	HEIGHT (MM)	WEIGHT (GRAM)	DENSITY (PERCENT)
88	10,570	10,570	10,020	9,018	93,539
89	10,580	10,580	10,130	9,068	92,858
90	10,580	10,580	10,080	9,027	92,898
91	10,570	10,570	9,980	8,993	93,655
92	10,580	10,580	9,710	8,728	93,251
95	10,560	10,580	9,950	8,880	92,582
96	10,560	10,560	10,020	9,006	93,592
98	10,570	10,570	9,900	8,909	93,531
99	10,580	10,580	10,140	9,136	93,462
100	10,580	10,580	9,730	8,687	92,622
102	10,580	10,580	9,990	8,993	93,383
104	10,580	10,580	9,900	8,917	93,438
105	10,580	10,580	9,960	8,948	93,197
106	10,580	10,580	9,960	8,986	93,592
107	10,580	10,580	10,100	9,079	93,247
109	10,580	10,580	9,990	9,012	93,581
110	10,580	10,580	9,980	8,982	93,363
111	10,570	10,570	10,010	8,910	92,512
113	10,580	10,580	10,050	9,011	93,010
114	10,580	10,580	9,650	8,685	93,370
115	10,580	10,580	10,020	8,939	92,544
117	10,580	10,580	10,020	8,975	92,917
118	10,580	10,580	10,050	9,060	93,516
119	10,580	10,580	9,950	8,962	93,436
120	10,570	10,570	9,890	8,854	93,048
121	10,580	10,580	9,930	8,948	93,479
122	10,570	10,570	9,930	8,845	92,578
123	10,570	10,570	10,000	8,938	92,895
124	10,580	10,580	9,850	8,872	93,439
125	10,570	10,570	10,070	9,010	92,991
126	10,580	10,580	10,070	9,016	92,877
127	10,560	10,560	9,990	8,903	92,800
128	10,580	10,580	9,990	8,984	93,290
129	10,580	10,580	9,780	8,745	92,763
130	10,570	10,570	10,100	9,064	93,270
131	10,580	10,580	10,130	9,106	93,247
132	10,570	10,570	9,950	8,853	92,475
134	10,570	10,570	9,990	8,914	92,739
136	10,580	10,580	10,120	9,094	93,216
137	10,580	10,580	9,980	8,931	92,833
138	10,580	10,580	9,910	8,920	93,375
141	10,560	10,560	9,960	8,937	93,436
142	10,560	10,560	10,140	9,142	93,879
144	10,570	10,570	10,040	8,985	93,011
145	10,580	10,580	9,940	8,960	93,510
146	10,580	10,580	9,940	8,895	92,831
149	10,580	10,580	9,820	8,752	92,458
150	10,580	10,580	9,930	8,867	92,633
151	10,580	10,580	10,140	9,126	93,359
152	10,580	10,580	9,950	8,934	93,145

WAI HB- 18- B-3 *** K-A

PIN NO 2

PEELET NO.	DIAMETER(X-AXIS) (MM)	DIAMETER(Y-AXIS) (MM)	HEIGHT (MM)	WEIGHT (GRAM)	DENSITY (PERCENT)
154	10.580	10.580	10.110	9.101	93.381
155	10.570	10.570	10.070	9.022	93.115
156	10.580	10.580	9.980	8.947	92.999
158	10.570	10.570	10.010	8.993	93.373
161	10.580	10.580	10.120	9.036	92.622
162	10.580	10.580	9.940	8.889	92.769
164	10.580	10.580	10.210	9.111	92.566
165	10.580	10.580	10.000	8.937	92.709
167	10.570	10.570	9.860	8.779	92.541
168	10.560	10.560	9.230	8.200	92.528
169	10.570	10.570	9.840	8.839	93.364
170	10.580	10.580	9.820	8.832	93.303
171	10.580	10.580	9.890	8.843	92.756
172	10.570	10.570	10.010	8.989	93.332
173	10.570	10.570	9.870	8.865	93.353
174	10.570	10.570	9.940	8.888	92.935
176	10.570	10.570	10.000	8.993	93.467
177	10.570	10.570	10.250	9.155	92.825
178	10.570	10.570	9.960	8.867	92.528
179	10.580	10.580	9.760	8.709	92.570
181	10.580	10.580	9.830	8.843	93.324
182	10.570	10.570	9.980	8.974	93.457
183	10.570	10.570	9.990	8.980	93.425
184	10.570	10.570	10.000	8.918	92.687
185	10.580	10.580	10.060	9.039	93.206
186	10.580	10.580	10.050	8.980	92.690
187	10.580	10.580	10.020	8.971	92.875
188	10.580	10.580	9.920	8.892	92.988
189	10.570	10.570	10.090	9.077	93.497
191	10.570	10.570	9.910	8.880	93.133
1037	10.530	10.530	10.280	9.249	94.217
1038	10.540	10.540	10.090	9.048	93.730
2003	10.510	10.510	10.350	9.371	95.174
2004	10.510	10.510	10.150	9.105	94.299
2005	10.510	10.510	10.400	9.284	93.837
2007	10.550	10.550	10.060	9.040	93.749
2013	10.500	10.500	9.960	9.006	95.239
9001	10.510	10.510	4.670	4.207	94.954
9002	10.510	10.510	4.430	3.977	94.651
9005	10.580	10.580	4.540	4.124	94.490

TOTAL HEIGHT 1380.000 (MM)
TOTAL WEIGHT 1237.245 (GRAM)

PEELET NO.	DIAMETER(X-AXIS) (MM)	DIAMETER(Y-AXIS) (MM)	HEIGHT (MM)	WEIGHT (GRAM)	DENSITY (PERCENT)
47	10,540	10.540	9,920	8,881	93,581
48	10,545	10,545	9,765	8.745	93,525
49	10.555	10,555	9,910	8,934	93,966
50	10,570	10,570	10,300	9,380	94,643
51	10.570	10.570	10,165	9,234	94,410
52	10.570	10,575	10,225	9,305	94,532
53	10.580	10,580	10,180	9,244	94,194
54	10,570	10,570	10,320	9.432	94,983
55	10,570	10.570	10.355	9,465	94,993
56	10,565	10,570	10,165	9,253	94.650
57	10.560	10,560	10,040	9,108	94,463
58	10.575	10,575	10,290	9,376	94.605
59	10,555	10,555	9,940	8,993	94,300
60	10,570	10,570	10,035	9,082	94,062
61	10,560	10,560	9,960	9,009	94,189
62	10,585	10,580	10.410	9,521	94,824
63	10.570	10,565	10,255	9,358	94.882
64	10,580	10,585	10,190	9,265	94,271
65	10,575	10,580	10,335	9,442	94,811
66	10.570	10,570	10,190	9.236	94.199
70	10,560	10,570	10,220	9,301	94,672
73	10,530	10,530	9,760	8,709	93.454
74	10,570	10,565	10,015	9,119	94.679
75	10,570	10,570	10,335	9,445	94,976
76	10,550	10,555	9,935	8.975	94,204
77	10.570	10,570	10,380	9,506	95.174
78	10,580	10,580	10,505	9,639	95,174
79	10,575	10.575	10,240	9,338	94.683
80	10,570	10,570	10,120	9.184	94,318
81	10,575	10.575	10,120	9.181	94,198
82	10,565	10,570	10,070	9,138	94,357
83	10,565	10,565	10,015	9,057	94,080
84	10,575	10,580	10,315	9.423	94,804
85	10,575	10.580	10,345	9.457	94,869
86	10,575	10.575	10,120	9.192	94,310
87	10,550	10,555	10,010	9,085	94,642
88	10,575	10.570	10,320	9.420	94,817
89	10.560	10,560	10,260	9.348	94.869
92	10,580	10,580	10,320	9,425	94,733
93	10,565	10.565	9,980	9,033	94,160
94	10,550	10,550	9,800	8,769	93,357
95	10,555	10,550	9,905	8,940	94,121
96	10,580	10,580	10,385	9.502	94,908
97	10,575	10.575	10,330	9,407	94.550
98	10,575	10.575	10,290	9,350	94,343
99	10,575	10,575	10,425	9,549	95,101
100	10,575	10,575	10,460	9,597	95,258
101	10,570	10,570	10,270	9.373	94,850
102	10,575	10.575	10,495	9,637	95,335
104	10,575	10.575	10,185	9.234	94,135

N 841—77—57

PEELET NO.	DIAMETER(X-AXIS) (MM)	DIAMETER(Y-AXIS) (MM)	HEIGHT (MM)	WEIGHT (GRAM)	DENSITY (PERCENT)
105	10.545	10.550	9.845	8.872	94.065
106	10.570	10.570	10.245	9.339	94.737
109	10.530	10.530	9.910	8.862	93.653
110	10.570	10.570	10.115	9.206	94.590
111	10.560	10.555	9.890	8.913	93.891
113	10.585	10.575	10.175	9.249	94.292
114	10.575	10.575	10.260	9.352	94.640
116	10.545	10.550	9.960	9.034	94.675
117	10.565	10.570	10.065	9.121	94.228
118	10.570	10.565	9.985	9.029	94.027
119	10.575	10.575	10.330	9.425	94.731
120	10.580	10.575	10.325	9.415	94.631
121	10.560	10.560	9.975	9.040	94.370
122	10.580	10.580	10.325	9.430	94.737
123	10.575	10.570	10.365	9.478	94.986
124	10.565	10.565	10.200	9.285	94.695
125	10.560	10.560	9.930	8.978	94.149
126	10.575	10.575	10.185	9.265	94.451
127	10.580	10.575	10.375	9.495	94.974
128	10.585	10.580	10.365	9.483	94.856
129	10.580	10.575	10.205	9.280	94.374
130	10.575	10.570	10.355	9.429	94.586
131	10.560	10.560	10.140	9.221	94.690
132	10.565	10.565	10.075	9.149	94.468
133	10.570	10.570	10.060	9.103	94.045
134	10.580	10.580	10.175	9.257	94.373
135	10.545	10.545	9.815	8.834	93.994
136	10.585	10.580	10.205	9.281	94.294
138	10.565	10.570	10.175	9.258	94.607
141	10.560	10.560	9.980	9.034	94.260
142	10.565	10.565	10.040	9.096	94.249
146	10.580	10.580	10.330	9.426	94.651
147	10.540	10.535	9.825	8.704	92.648
148	10.570	10.570	10.275	9.376	94.834
149	10.580	10.580	10.385	9.454	94.428
150	10.580	10.580	10.445	9.571	95.047
151	10.565	10.565	10.125	9.213	94.658
152	10.565	10.570	10.220	9.312	94.739
153	10.570	10.580	10.125	9.169	94.028
154	10.580	10.580	10.355	9.456	94.723
155	10.560	10.560	9.995	9.048	94.264
156	10.565	10.570	10.120	9.198	94.506
158	10.575	10.580	10.280	9.374	94.632
159	10.580	10.580	10.290	9.391	94.667
160	10.560	10.560	10.065	9.125	94.404
162	10.575	10.575	10.390	9.520	95.132
163	10.580	10.580	10.330	9.446	94.852
164	10.565	10.575	10.240	9.337	94.763
165	10.555	10.555	9.980	8.987	93.859
166	10.570	10.580	10.260	9.358	94.701

N 841-77-57

HAI HB HB ** LID LET

PIN NO 3

PELLET NO.	DIAMETER(X-AXIS) (MM)	DIAMETER(Y-AXIS) (MM)	HEIGHT (MM)	WEIGHT (GRAM)	DENSITY (PERCENT)
167	10.570	10.580	10.100	9.170	94.271
168	10.580	10.580	10.300	9.336	94.525
169	10.525	10.530	9.640	8.509	92.491
170	10.575	10.575	10.410	9.544	95.188
171	10.575	10.575	10.135	9.214	94.396
172	10.530	10.530	9.685	8.618	93.195
173	10.570	10.570	10.015	9.068	94.105
174	10.575	10.575	10.390	9.520	95.132
175	10.575	10.575	10.320	9.433	94.903
176	10.570	10.570	10.070	9.130	94.230
177	10.560	10.560	9.980	9.050	94.427
178	10.555	10.560	10.145	9.239	94.873
179	10.575	10.575	10.365	9.475	94.911
180	10.580	10.580	10.305	9.408	94.700
181	10.580	10.580	10.265	9.362	94.605
182	10.570	10.570	10.270	9.384	94.961
183	10.565	10.565	9.875	8.886	93.615
184	10.580	10.580	10.340	9.441	94.710
185	10.580	10.580	10.375	9.481	94.790
186	10.570	10.570	10.200	9.282	94.575
187	10.565	10.570	10.260	9.323	94.481
188	10.570	10.570	10.220	9.320	94.776
1001	10.580	10.575	10.245	9.244	93.640
1002	10.525	10.525	9.910	8.916	94.313
1003	10.565	10.570	9.880	8.844	93.081
1004	10.545	10.550	10.270	9.309	94.605
1005	10.565	10.565	9.890	8.891	93.526
1006	10.565	10.560	9.750	8.797	93.913
1007	10.520	10.525	9.425	8.465	94.206
1008	10.545	10.550	9.820	8.806	93.604
1009	10.550	10.550	10.135	9.145	94.135
1010	10.530	10.530	9.825	8.802	93.825
1011	10.540	10.540	9.835	8.823	93.775
1012	10.570	10.565	10.085	9.087	93.690
1013	10.550	10.550	9.950	8.923	93.561
1086	10.570	10.570	10.270	9.254	93.645

TOTAL HEIGHT 1379.920 (MM)
TOTAL WEIGHT 1252.823 (GRAM)

HAL HB- ,HB- ,(HI -1 H DIA 492)-2C)LE ,=3, ,)

PIN NO 4

PELLET NO.	DIAMETER(X-AXIS) (MM)	DIAMETER(Y-AXIS) (MM)	HEIGHT (MM)	WEIGHT (GRAM)	DENSITY (PERCENT)
2027	10.545	10.550	10.770	8.681	94.612
2028	10.545	10.565	10.445	8.306	93.202
2029	10.550	10.550	10.530	8.460	94.262
2030	10.555	10.550	10.435	8.393	94.320
2031	10.535	10.550	10.100	8.076	93.980
2032	10.540	10.545	10.370	8.330	94.402
2033	10.530	10.535	10.625	8.584	95.141
2034	10.525	10.525	10.420	8.291	93.859
2035	10.540	10.545	10.380	8.267	93.598
2036	10.545	10.560	10.610	8.563	94.637
2037	10.535	10.530	10.065	8.045	94.147
2038	10.540	10.535	10.640	8.503	94.009
2039	10.540	10.535	10.235	8.212	94.398
2040	10.565	10.560	10.810	8.707	94.240
2041	10.555	10.550	10.410	8.373	94.322
2042	10.535	10.540	10.640	8.578	94.838
2043	10.515	10.510	10.095	8.013	93.894
2044	10.550	10.550	10.250	8.206	93.939
2045	10.550	10.555	10.135	8.086	93.570
2046	10.555	10.550	10.820	8.734	94.647
2047	10.540	10.530	10.550	8.492	94.742
2048	10.545	10.550	10.215	8.191	94.140
2049	10.545	10.555	10.735	8.666	94.707
2050	10.510	10.505	10.110	8.015	93.879
2051	10.550	10.555	10.230	8.172	93.683
2052	10.550	10.545	10.195	8.143	93.773
2053	10.545	10.550	10.670	8.616	94.787
2054	10.535	10.530	10.300	8.177	93.500
2055	10.560	10.560	10.655	8.544	93.876
2056	10.540	10.540	10.085	8.048	93.844
2057	10.530	10.540	9.985	7.935	93.556
2058	10.560	10.555	10.695	8.579	93.957
2059	10.520	10.515	10.145	8.042	93.667
2060	10.570	10.565	10.820	8.712	94.107
2061	10.570	10.560	10.850	8.718	93.960
2062	10.545	10.545	10.620	8.550	94.555
2063	10.560	10.545	10.630	8.574	94.580
2064	10.530	10.525	10.290	8.178	93.703
2065	10.540	10.530	10.220	8.189	94.323
2066	10.510	10.500	10.075	7.990	93.963
2067	10.545	10.540	10.605	8.535	94.574
2068	10.550	10.550	10.260	8.156	93.275
2069	10.565	10.570	10.650	8.573	94.089
2070	10.535	10.540	10.145	8.017	92.977
2071	10.545	10.555	10.075	8.064	93.923
2072	10.515	10.495	10.160	8.047	93.838
2073	10.555	10.545	10.545	8.477	94.316
2074	10.555	10.545	10.560	8.503	94.471
2075	10.555	10.555	10.715	8.641	94.509
2076	10.530	10.520	10.180	8.066	93.472

N841—77—57

PELLET NO.	DIAMETER(X-AXIS) (MM)	DIAMETER(Y-AXIS) (MM)	HEIGHT (MM)	WEIGHT (GRAM)	DENSITY (PERCENT)
2077	10.520	10.505	9.870	7.846	94.042
2078	10.525	10.530	10.495	8.377	94.101
2079	10.510	10.505	10.120	8.041	94.090
2080	10.545	10.535	10.395	8.343	94.372
2081	10.535	10.515	10.340	8.224	93.823
2082	10.525	10.540	10.550	8.453	94.357
2083	10.545	10.545	10.570	8.496	94.404
2084	10.575	10.555	10.695	8.581	93.829
2085	10.530	10.540	10.195	8.162	94.243
2086	10.540	10.555	10.660	8.605	94.755
2087	10.505	10.525	10.165	8.075	93.916
2088	10.535	10.545	10.705	8.593	94.375
2089	10.550	10.550	10.350	8.287	93.946
2090	10.560	10.560	10.780	8.680	94.261
2091	10.505	10.505	9.855	7.851	94.397
2092	10.535	10.530	10.180	8.157	94.375
2093	10.545	10.550	10.385	8.337	94.244
2094	10.530	10.540	10.215	8.175	94.208
3031	10.555	10.550	9.850	7.902	94.123
3032	10.560	10.555	9.845	7.895	93.987
3033	10.565	10.565	10.115	8.237	95.278
3034	10.555	10.550	9.760	7.826	94.081
3035	10.555	10.550	9.865	7.938	94.408
3036	10.560	10.565	10.090	8.200	95.137
3037	10.545	10.555	9.855	7.920	94.340
3038	10.550	10.555	9.780	7.836	94.008
3039	10.545	10.550	9.630	7.639	93.177
3040	10.545	10.545	9.610	7.609	93.055
3041	10.555	10.555	9.825	7.845	93.633
3042	10.560	10.555	9.710	7.777	93.875
3043	10.555	10.550	9.910	8.012	94.853
3044	10.565	10.565	9.940	8.004	94.219
3045	10.560	10.565	9.920	7.996	94.366
3046	10.560	10.550	9.915	7.953	94.057
3047	10.560	10.560	9.710	7.781	93.873
3049	10.560	10.565	9.840	7.892	93.899
3050	10.555	10.555	9.895	7.960	94.330
3052	10.555	10.560	9.890	7.967	94.411
3053	10.540	10.540	9.700	7.761	94.130
3054	10.545	10.550	9.740	7.782	93.845
3055	10.560	10.565	10.115	8.242	95.387
3056	10.550	10.555	9.960	8.056	94.894
3057	10.550	10.550	9.860	7.944	94.578
3058	10.560	10.565	9.925	8.011	94.495
3059	10.540	10.545	9.650	7.664	93.387
3062	10.535	10.540	9.660	7.668	93.439
3063	10.545	10.545	9.835	7.906	94.466
3064	10.570	10.570	10.185	8.312	95.381
3065	10.550	10.550	9.890	7.959	94.468
3066	10.565	10.570	10.075	8.197	95.143

N841—77—57

HALDEN RB-202, RB-202, RB-202 HOLE D.A.=0.002, NO 202 HOLE DI . 3.49

PIN NO 4

PEELET NO.	DIAMETER(X-AXIS) (MM)	DIAMETER(Y-AXIS) (MM)	HEIGHT (MM)	WEIGHT (GRAM)	DENSITY (PERCENT)
3067	10.555	10.555	10.060	8.193	95.493
3069	10.555	10.560	9.940	8.009	94.430
3070	10.540	10.540	9.735	7.748	93.633
3071	10.550	10.550	9.820	7.829	93.590
3073	10.560	10.560	9.890	7.948	94.135
3074	10.540	10.540	9.900	7.991	94.954
3075	10.550	10.550	9.790	7.826	93.842
3076	10.560	10.565	10.080	8.213	95.383
3077	10.560	10.560	9.815	7.879	94.034
3078	10.560	10.560	9.960	8.067	94.871
3079	10.545	10.550	9.725	7.760	93.725
3080	10.555	10.555	9.815	7.891	94.278
3081	10.575	10.565	10.095	8.224	95.216
3082	10.545	10.555	10.005	8.128	95.360
3083	10.555	10.555	9.940	8.027	94.692
3084	10.555	10.560	10.055	8.158	95.082
3085	10.545	10.550	9.745	7.789	93.881
3086	10.550	10.545	9.660	7.673	93.300
3087	10.555	10.565	9.835	7.900	94.092
3088	10.575	10.570	10.105	8.210	94.909
3089	10.565	10.565	10.015	8.124	94.913
3090	10.575	10.575	9.795	7.960	94.892
3091	10.555	10.550	9.755	7.772	93.480
3093	10.575	10.575	10.060	8.173	94.855
3094	10.555	10.560	9.860	7.904	93.951
3095	10.565	10.560	9.905	7.980	94.321
3096	10.560	10.565	9.810	7.873	93.961
3097	10.565	10.560	10.125	8.252	95.408
3098	10.545	10.550	9.705	7.758	93.894
3099	10.560	10.550	9.995	8.075	94.732
3100	10.560	10.575	10.170	8.302	95.458
3101	10.560	10.570	9.780	7.841	93.817
3102	10.555	10.555	9.795	7.874	94.268
3103	10.560	10.560	9.745	7.787	93.606
3104	10.565	10.560	9.730	7.783	93.653
3105	10.575	10.575	10.145	8.275	95.231

TOTAL HEIGHT 1379.190 (MM)
TOTAL WEIGHT 1107.188 (GRAM)

PIN NO 5

PAGE 1

N841—77—57

PEELET NO.	DIAMETER(X-AXIS) (MM)	DIAMETER(Y-AXIS) (MM)	HEIGHT (MM)	WEIGHT (GRAM)	DENSITY (PERCENT)
3	10.580	10.575	10.425	9.564	95.205
4	10.565	10.565	10.170	9.251	94.627
5	10.575	10.575	10.295	9.409	94.892
7	10.565	10.570	10.060	9.120	94.265
9	10.560	10.550	9.885	8.933	94.194
10	10.570	10.570	10.190	9.273	94.576
11	10.580	10.575	10.295	9.417	94.928
12	10.565	10.570	10.175	9.258	94.607
15	10.570	10.570	10.105	9.174	94.355
16	10.570	10.570	10.345	9.465	95.085
17	10.565	10.570	10.165	9.242	94.537
18	10.570	10.570	10.345	9.457	95.004
20	10.550	10.550	9.915	8.967	94.355
21	10.565	10.565	10.230	9.325	94.823
22	10.550	10.550	9.955	8.904	93.315
23	10.550	10.550	9.975	9.035	94.497
24	10.580	10.580	10.315	9.412	94.648
26	10.575	10.580	10.385	9.495	94.883
27	10.580	10.580	10.375	9.485	94.830
28	10.565	10.565	10.065	9.123	94.294
29	10.560	10.560	10.125	9.207	94.686
30	10.580	10.580	10.330	9.416	94.551
31	10.555	10.550	10.020	9.055	94.236
32	10.565	10.565	10.040	9.105	94.342
33	10.550	10.550	9.960	9.012	94.399
34	10.560	10.565	9.960	8.992	93.966
35	10.580	10.580	10.450	9.580	95.090
36	10.570	10.570	10.090	9.155	94.300
37	10.570	10.570	10.175	9.245	94.430
38	10.575	10.575	10.440	9.558	95.053
39	10.565	10.565	10.100	9.174	94.491
40	10.570	10.575	10.155	9.234	94.459
41	10.575	10.580	10.260	9.353	94.605
42	10.580	10.580	10.135	9.197	94.133
43	10.560	10.560	10.160	9.266	94.964
44	10.565	10.565	10.205	9.285	94.649
45	10.560	10.560	10.100	9.179	94.633
46	10.550	10.585	10.185	9.252	94.185
1015	10.550	10.550	10.055	9.062	94.024
1018	10.570	10.575	9.690	8.834	94.714
1019	10.540	10.545	9.920	8.900	93.736
1020	10.520	10.520	9.650	8.615	93.680
1021	10.540	10.540	9.745	8.698	93.302
1022	10.560	10.560	9.745	8.676	92.713
1024	10.560	10.555	9.920	8.903	93.501
1025	10.530	10.535	9.805	8.783	93.770
1026	10.525	10.530	9.550	8.450	92.717
1027	10.555	10.555	10.005	8.956	93.301
1028	10.510	10.515	9.555	8.497	93.451
1029	10.520	10.520	9.480	8.408	93.072

PELLET NO.	DIAMETER(X-AXIS) (MM)	DIAMETER(Y-AXIS) (MM)	HEIGHT (MM)	WEIGHT (GRAM)	DENSITY (PERCENT)
1030	10.565	10.570	9.770	8.713	92.738
1031	10.535	10.540	9.775	8.720	93.295
1032	10.500	10.500	9.665	8.633	94.088
1033	10.545	10.550	9.820	8.782	93.349
1034	10.550	10.550	10.185	9.220	94.440
1035	10.555	10.555	10.025	9.022	93.800
1036	10.520	10.520	9.945	8.937	94.292
1039	10.560	10.560	9.920	8.912	93.551
1040	10.575	10.560	9.905	8.895	93.204
1043	10.540	10.540	9.915	8.905	93.881
1045	10.555	10.555	9.940	8.912	93.451
1046	10.530	10.525	9.660	8.642	93.548
1051	10.565	10.560	10.290	9.369	94.759
1051	10.555	10.560	9.685	8.638	92.924
1053	10.505	10.510	9.505	8.423	93.214
1054	10.520	10.525	10.050	9.075	94.700
1055	10.575	10.570	10.050	9.032	93.360
1059	10.565	10.565	9.920	8.920	93.546
1060	10.560	10.555	9.850	8.812	93.205
1062	10.540	10.540	9.985	8.970	93.902
1063	10.550	10.550	10.110	9.121	94.120
1064	10.580	10.565	9.900	8.873	92.933
1065	10.555	10.560	9.905	8.895	93.559
1066	10.540	10.545	9.905	8.880	93.668
1068	10.555	10.555	9.750	8.691	92.914
1069	10.545	10.555	10.030	9.028	93.905
1070	10.565	10.565	9.740	8.705	92.982
1123	10.545	10.545	10.105	9.130	94.349
1124	10.560	10.560	10.095	9.117	94.040
1125	10.570	10.575	10.125	9.201	94.401
1127	10.535	10.535	10.040	9.038	94.184
1128	10.570	10.575	10.040	9.035	93.484
1130	10.580	10.585	10.520	9.566	94.274
1131	10.560	10.570	10.300	9.382	94.753
1133	10.570	10.565	10.570	9.615	94.576
1134	10.580	10.585	10.385	9.470	94.543
1136	10.580	10.580	10.505	9.589	94.680
1140	10.565	10.565	10.335	9.373	94.341
1141	10.575	10.570	10.620	9.668	94.559
1142	10.550	10.545	10.060	9.083	94.240
1145	10.580	10.580	9.915	8.869	92.794
1146	10.555	10.555	10.010	9.078	94.524
1147	10.580	10.580	10.420	9.532	94.887
1148	10.555	10.555	10.150	9.174	94.204
1149	10.570	10.565	10.275	9.294	94.049
1150	10.555	10.560	9.955	8.966	93.831
1151	10.575	10.570	10.500	9.541	94.385
1152	10.555	10.555	10.085	9.157	94.636
1153	10.575	10.575	10.590	9.647	94.576
1154	10.565	10.565	10.400	9.439	94.410

N84-77-57

HALDEN HO-301+HO-302 PELLET

PIN NO 5

PELLET NO.	DIAMETER(X-AXIS) (MM)	DIAMETER(Y-AXIS) (MM)	HEIGHT (MM)	WEIGHT (GRAM)	DENSITY (PERCENT)
1155	10.575	10.580	10.525	9.569	94.347
1156	10.575	10.580	10.040	9.025	93.292
1157	10.575	10.570	10.275	9.320	94.223
1158	10.555	10.555	10.095	9.063	93.572
1160	10.560	10.555	9.950	9.008	94.318
1161	10.565	10.570	10.135	9.164	94.017
1163	10.560	10.565	10.240	9.329	94.816
1166	10.585	10.560	10.020	9.168	94.870
1167	10.560	10.560	10.250	9.292	94.393
1168	10.555	10.560	10.205	9.230	94.222
1169	10.555	10.550	10.255	9.341	94.979
1170	10.555	10.550	10.470	9.537	94.977
1171	10.575	10.570	10.405	9.488	94.720
1172	10.570	10.565	10.460	9.518	94.608

TOTAL HEIGHT 1150.225 (MM)
TOTAL WEIGHT 1040.097 (GRAM)

HALDEN-T.C HB-42-11 HOLE DIA.=1.96(MM) MI-KENMA PELLET

PIN NO 5

PELLET NO.	DIAMETER(X-AXIS) (MM)	DIAMETER(Y-AXIS) (MM)	HEIGHT (MM)	WEIGHT (GRAM)	DENSITY (PERCENT)
101	10.580	10.580	10.040	8.840	94.590
102	10.580	10.580	10.070	8.872	94.649
103	10.570	10.560	9.980	8.763	94.610
104	10.570	10.570	10.080	8.897	95.008
105	10.580	10.580	10.060	8.861	94.626
106	10.560	10.570	9.970	8.763	94.705
107	10.560	10.570	9.820	8.603	94.399
108	10.570	10.570	9.950	8.742	94.575
109	10.580	10.580	10.180	8.984	94.806
110	10.560	10.570	10.100	8.914	95.094
112	10.580	10.570	10.050	8.853	94.728
113	10.570	10.570	9.930	8.725	94.582
114	10.570	10.570	9.890	8.675	94.421
115	10.580	10.580	10.130	8.942	94.830
116	10.570	10.570	9.880	8.659	94.343
117	10.580	10.570	10.050	8.850	94.696
118	10.580	10.570	9.860	8.694	94.823
119	10.570	10.570	9.960	8.753	94.599
120	10.560	10.560	9.840	8.593	94.282
121	10.570	10.570	9.940	8.727	94.508
122	10.580	10.580	10.000	8.806	94.604
123	10.570	10.570	9.970	8.764	94.623
127	10.580	10.580	10.160	8.966	94.803

T.C PELLET TOTAL HEIGHT 229.910 (MM)
T.C+SOLID TOTAL HEIGHT 1380.135 (MM)
T.C PELLET TOTAL WEIGHT 202.246 (GRAM)
T.C+SOLID TOTAL WEIGHT 1242.343 (GRAM)

PEELET NO.	DIAMETER(X-AXIS) (MM)	DIAMETER(Y-AXIS) (MM)	HEIGHT (MM)	WEIGHT (GRAM)	DENSITY (PERCENT)
2001	10,560	10,570	10,585	8,512	94,045
2002	10,540	10,535	10,085	8,059	94,022
2003	10,545	10,535	10,370	8,321	94,351
2004	10,545	10,535	10,675	8,579	94,487
2005	10,545	10,545	10,755	8,688	94,871
2006	10,575	10,560	10,365	8,342	94,080
2007	10,525	10,530	10,325	8,271	94,446
2008	10,540	10,530	10,360	8,311	94,429
2009	10,565	10,560	10,695	8,571	93,769
2010	10,555	10,550	10,565	8,496	94,298
2011	10,545	10,555	10,895	8,819	94,958
2012	10,505	10,515	10,160	8,091	94,250
2013	10,540	10,545	10,495	8,358	93,587
2014	10,545	10,555	10,635	8,520	93,990
2015	10,530	10,535	10,375	8,251	93,662
2016	10,540	10,525	10,215	8,185	94,373
2017	10,550	10,545	10,565	8,454	93,932
2018	10,570	10,565	10,790	8,689	94,120
2019	10,535	10,545	10,160	8,115	93,924
2020	10,555	10,555	10,670	8,606	94,525
2021	10,540	10,535	10,205	8,170	94,192
2022	10,545	10,540	10,320	8,251	93,962
2023	10,550	10,570	10,700	8,570	93,764
2024	10,520	10,525	10,260	8,141	93,653
2025	10,570	10,560	10,670	8,551	93,721
2026	10,555	10,545	10,665	8,598	94,582
2107	10,535	10,540	10,215	8,173	94,134
2108	10,530	10,530	10,345	8,281	94,326
2109	10,545	10,550	10,325	8,270	94,032
2110	10,540	10,550	10,620	8,522	94,246
2111	10,535	10,535	10,140	8,110	94,152
2112	10,530	10,515	10,075	8,038	94,173
2113	10,545	10,555	10,115	8,066	93,573
2114	10,570	10,525	10,675	8,564	94,170
2115	10,535	10,530	10,220	8,195	94,442
2116	10,535	10,530	10,285	8,239	94,347
2117	10,525	10,535	10,250	8,119	93,341
2118	10,545	10,535	10,065	8,024	93,751
2119	10,535	10,540	10,465	8,360	93,979
2120	10,535	10,530	10,180	8,144	94,225
2121	10,555	10,540	10,640	8,537	94,183
2122	10,560	10,540	10,215	8,176	93,917
2123	10,570	10,560	10,700	8,568	93,643
2124	10,535	10,545	10,715	8,612	94,495
2125	10,550	10,545	10,590	8,529	94,541
2126	10,540	10,555	10,060	8,107	94,616
2127	10,530	10,535	10,095	8,068	94,134
2128	10,560	10,560	10,710	8,626	94,289
2129	10,550	10,555	10,530	8,463	94,245
2130	10,525	10,525	10,265	8,236	94,649

N841-71-57

N841-77-57

PEELET NO.	DIAMETER(X-AXIS) (MM)	DIAMETER(Y-AXIS) (MM)	HEIGHT (MM)	WEIGHT (GRAM)	DENSITY (PERCENT)
2131	10,540	10,540	10,295	8,227	93,967
2132	10,560	10,560	10,860	8,771	94,545
2133	10,530	10,530	10,150	8,113	94,195
2134	10,545	10,535	10,705	8,599	94,440
2135	10,545	10,545	9,770	7,880	94,758
2136	10,545	10,545	10,765	8,669	94,575
2137	10,550	10,545	10,315	8,272	94,146
2138	10,545	10,540	10,195	8,173	94,219
2139	10,525	10,525	10,355	8,250	93,983
2140	10,545	10,545	10,660	8,564	94,353
2141	10,550	10,550	10,795	8,706	94,613
2142	10,500	10,505	9,745	7,753	94,326
2143	10,545	10,545	10,640	8,571	94,609
2144	10,535	10,540	10,210	8,180	94,261
2145	10,545	10,560	10,690	8,576	94,069
2146	10,545	10,545	10,700	8,577	94,142
2147	10,545	10,550	10,345	8,306	94,255
2148	10,545	10,545	10,340	8,241	93,615
2149	10,520	10,530	10,320	8,188	93,594
2150	10,575	10,580	10,340	8,317	93,826
2151	10,500	10,500	10,125	8,040	94,183
2152	10,550	10,550	10,610	8,537	94,400
2153	10,540	10,545	10,485	8,432	94,506
2154	10,555	10,560	10,680	8,611	94,441
2155	10,545	10,550	10,845	8,733	94,518
2156	10,530	10,530	10,700	8,598	94,676
2157	10,530	10,530	10,675	8,573	94,623
2158	10,535	10,535	10,425	8,387	94,697
2159	10,535	10,540	10,430	8,393	94,668
2160	10,540	10,535	10,345	8,304	94,437
3002	10,555	10,550	9,680	7,714	93,504
3003	10,550	10,555	10,005	8,119	95,204
3004	10,555	10,555	9,895	7,960	94,330
3005	10,555	10,560	9,940	8,022	94,583
3006	10,535	10,540	9,890	7,981	94,982
3007	10,565	10,560	10,020	8,081	94,414
3008	10,550	10,550	9,765	7,798	93,746
3009	10,565	10,570	9,930	7,989	94,088
3010	10,545	10,540	9,665	7,650	93,072
3011	10,555	10,550	9,880	7,930	94,169
3012	10,545	10,540	9,610	7,624	93,288
3013	10,550	10,545	9,890	7,950	94,411
3014	10,550	10,545	9,755	7,766	93,508
3015	10,565	10,565	10,100	8,212	95,131
3016	10,565	10,570	10,100	8,223	95,207
3017	10,560	10,555	9,865	7,924	94,141
3018	10,550	10,555	9,895	7,943	94,180
3020	10,545	10,550	9,875	7,918	94,175
3021	10,550	10,560	9,765	7,775	93,370
3022	10,560	10,565	9,885	7,949	94,145

HA! HB' ,HB ,(H 1 H DIA 492 3-2( )LE ,=3 ,)

PIN NO 6

PEELET NO.	DIAMETER(X-AXIS) (MM)	DIAMETER(Y-AXIS) (MM)	HEIGHT (MM)	WEIGHT (GRAM)	DENSITY (PERCENT)
3023	10,555	10,555	9,915	7,980	94,376
3024	10,565	10,570	10,075	8,177	94,911
3025	10,545	10,550	9,775	7,830	94,084
3026	10,570	10,565	9,875	7,948	94,128
3027	10,575	10,575	10,070	8,149	94,482
3028	10,565	10,550	9,970	8,074	94,908
3029	10,545	10,555	9,870	7,934	94,362
3030	10,570	10,570	10,030	8,137	94,821
3125	10,560	10,560	10,025	8,107	94,721
3126	10,560	10,565	9,885	7,968	94,370
3127	10,570	10,570	10,045	8,132	94,621
3128	10,560	10,555	9,850	7,886	93,832
3130	10,550	10,560	9,730	7,732	93,189
3131	10,570	10,570	9,980	8,076	94,584
3132	10,550	10,545	9,690	7,699	93,325
3133	10,570	10,570	9,950	7,998	93,954
3134	10,560	10,560	9,930	8,018	94,581
3135	10,540	10,555	9,595	7,581	92,808
3136	10,555	10,555	9,950	8,004	94,326
3137	10,550	10,555	9,915	7,980	94,427
3138	10,545	10,550	9,690	7,713	93,495
3139	10,555	10,550	9,660	7,679	93,273
3140	10,555	10,555	9,635	7,633	92,906
3141	10,575	10,575	10,060	7,994	92,777
3142	10,560	10,555	9,890	7,807	92,515
3144	10,575	10,570	10,055	7,985	92,768
3146	10,555	10,550	9,975	7,901	92,927
3148	10,550	10,555	9,950	7,867	92,761
3151	10,565	10,565	9,735	7,723	92,834
3155	10,570	10,575	10,160	8,106	93,197
3158	10,560	10,560	10,165	8,140	93,791
3161	10,545	10,550	9,985	7,925	93,215
3162	10,565	10,570	10,080	8,017	93,007
3163	10,575	10,575	10,165	8,125	93,320
3167	10,570	10,570	10,055	8,010	93,108

TOTAL HEIGHT 1379,365 (MM)
TOTAL WEIGHT 1105,650 (GRAM)

Ⅵ 評価および考察

本計算コードを使って，次の三種類の照射用燃料ペレットについて，ペレット検査結果のデータ整理とスタック長調整を行なった。

(1) GETR—LOC，LFB照射用燃料

(2) Rapsodie—6，7 〃

(3) Halden—IFA—514 〃

これらの燃料のスタック長調整作業は，

(イ) スタック長が短かい上に仕様範囲が狭い（表—2参照）

(ロ) ピンを構成するのに必要な最低個数をわずかに上回る程度の個数しか，製品ペレット数がない（表—2参照）

(ハ) スタック長調整用の高さの低いペレットを製造しない。

(ニ) 照射試験の為に，1ケ1ケのペレットに背番号がつけられており，各ピン毎にペレット位置，ペレット番号，寸法，密度，外観状態等が明確になっていなければならない。

等々のことから，従来のように手計算によって，必要とする全ピンともスペック内に入るような組み合わせを見つけ出すことは極めて困難な作業であることが予想された。

ちなみに，GETR—LOC，LFBのスタック長調整を手計算で試みた結果，作業員1名が1日かかって計算したが，必要ピン玉数12本中，8本のピンがスタック長仕様に入るような組み合わせが出来上ったにすぎない。

しかし，本計算コードを使って，製品ペレットの検査結果整理，スペック判定，合格ペレットをピン充てんする際のスタック長調整を行った結果，表—2に示したように短時間に必要とする全ピン本数について，スペックを満たすようなペレットの充てん組み合せを見つけ出し，その結果をV—1およびV—2のような形式で出力されるようになった。

表—2 スタック長調整実績

燃料ロット	製品ペレット数	必要ペレット数	スタック長仕様	必要ピン本数	使用スタック長コード名	出来上りピン本数	計算時間	試行組合せ回数
GETR—LOC. LFB	152個	144個	120±2mm	12本	STACK—3	12本	12分	43,200
Rap—6.7	120	120	120±2mm	10	STACK—3	10	30	108,000
Halden IFA—514 中実	294	274	1,379.5±0.5mm (*)	2	STACK—1	2	11	39,600
Halden IFA—514 中空	303	274	1,379.5±0.5mm (*)	2	STACK—3	2	180	648,000
Halden IFA—514 中実＋T.C	201	150	1,380.5±0.5mm (*)	2	STACK—2	2	20	72,000

スタック長調整用サブプログラムであるSTACK I～STACK IIの試行組合せ回数Nは，

p＝必要ピン本数

a＝ペレット個数／ピン

m＝余りペレット個数（製品ペレット数－必要ペレット数）

とすれば，次式で表わされる。

STACK－I では

$$N_1 = 1 + a\,[1 + m\{1 + p(2 + ma + a)\}] \quad \cdots\cdots\cdots\cdots \quad (1)$$

STACK－II では

$$N_2 = 1 + 2a(mp + map + 1) \quad \cdots\cdots\cdots\cdots \quad (2)$$

STACK－III では

$$N_3 = 1 + 2a(mp + map + 1) + {}^{(**)}{}_{n}C_{a}$$

$$= N_2 + {}^{(**)}{}_{n}C_{a} \quad \cdots\cdots\cdots\cdots \quad (3)$$

(＊)　製造目標値

(＊＊)　N_2回の組合せの結果，合格したピン本数をp_2とすれば

$n = a(p - p_2)$

(1)，(2)式からわかるように，STACK－I，II では余りペレット数(m)が0に近いような場合には，試行組み合せ数が極めて少くなるので，このような場合には，STACK－IIIを使用してスタック長調整を行うことが必要である。

Ⅶ まとめ

照射試験用燃料ピンは，一般に短尺であり，スタック長仕様が狭い（ペレット高さ／2）うえに，製造個数もあまり余裕のない場合が多いので，ある限られた個数のペレットの並べ換えを行って，全ピンについてスタック長調整するのに従来多く作業時間を費やしていた。

しかし，本計算コードの開発によって，ペレット寸法密度計算ースペック判定ースタック長調整の為のペレット選択ー各ピン毎のペレットデータ表の作成という一連の作業が迅速化かつ正確化されただけでなく，スタック長仕様範囲が±1 mm 以下のような狭い場合でも難なくペレット配列を決めることができるようになったことによって，照射用燃料ピンの製造技術の向上と，作業能率の向上と被曝量の低減化に大いに役立った。

将来は，本計算コードを現在開発中のレーザー光線を利用した無接触型自動ペレット寸法密度測定装置に直結し，ペレット検査ーデータ整理ースタック長調整ーペレット配列の工程を全て自動化する計画である。

なお，本計算コードはFACOM—230—OSⅡ用に作られたものである為，記憶容量の関係から処理できるペレット数に制限があるが，これは更に容量の大きい計算機を使用することによって，解決できる。

付 録

MAIN PROGRAM

COSTACK

SOURCE LIST

```
      C+----------------------------+
      CI STACK CHYOSEI MAIN PROGRAM I                                   *
      C+----------------------------+                                   *
      C     N=PELLET KOSUU, DT=DIAMETER TOTAL, HT=HEIGHT TOTAL          *
      C     W=WEIGHT TOTAL, AT=DENSITY TOTAL,  ATDT=THEORY DENSITY TOTAL *
      C     DS=THE SQUARE OF DIAMETER, WS=THE SQUARE OF WEIGHT,         *
      C     ATDS=THE SQUARE OF THORY DENSITY,  AS=THE SQUARE OF DENSITY, *
      C     I7=THE TOTAL PELLET OF PASS INSPECTION,                     *
      C     I8=THE TOTAL PELLET OF FAIL TO PASS                         *
      C     C1=CORRECT VOLUME, C2=A COEFFICIENT OF THEORY DENSITY,      *
      C-----SYOKIGYOUKEN O KIMERU-----                                  *
0001        DIMENSION TITLE(20),N1(1000),HEIG(1000),DIA1(1000),DIA2(1000), *
           *WEIG(1000),AMITUD(1000)                                     *
0002        DOUBLE PRECISION DT,HT,WT,ATT,ATDT,DS,WS,ATDS,AS,HTH,WTH,AT *
0003        DOUBLE PRECISION ATDTT,VATDTT,VATH,VWTH,VDH                 *
0004        DATA Q1,Q2,N,I7,I8/1H0,1HX,0,0,0/,J1,J2/2HNO,2HOK/          *
0005        DATA DT,HT,WT,AT,ATDT,DS,WS,ATDS,AS,HS,ATT/11*0.0/          *
0006        DATA HEIG,DIA1,DIA2,WEIG,AMITUD/1000*0.0,1000*0.0,1000*0.0, *
           *1000*0.0,1000*0.0/,N1/1000*0/                               *
0007        ID4=0                                                       *
0008        IATD=0                                                      *
0009        READ(5,5)TITLE                                              *
0010      5 FORMAT(20A4)                                                *
0011        READ(5,7)B1,B2,B3,B4,C1,C2,SPECL,SPECKH                     *
0012      7 FORMAT(8F10.3)                                              *
0013     16 WRITE(6,15)(TITLE(M),M=1,20)                                *
0014     15 FORMAT(1H1,///,11X,1H+,106(1H-),1H+,/,11X,1HI,20A4,1X,1HI,8X, *
          1'J  U  D  G  E',3X,1HI,/,11X,1H+,106(1H-),1H+,/,11X,1HI,4X, *
          21HI,2X,'DIA.(X) ',1HI,2X,'DIA.(Y) ',1HI,1X,'DIA.(AV) ',1HI, *
          32X,'HEIGHT  ',1HI,2X,'WEIGHT  ',1HI,1X,'DENSITY  ',1HI,    *
          4'DENSI(T.D)',1HI,'DIA.&.' ,1HI,9X,1HI,7X,1HI,/,11X,1HI,' NO ', *
          51HI,5X,'(MM) ',1HI,5X,'(MM) ',1HI,5X,'(MM) ',1HI,4X,'(MM) ', *
          61X,1HI,'  (GRAM)  ',1HI,2X,'(G/CC)  ',1HI,' (PERCENT)',1HI, *
          7'DENSI.',1HI,' DIA.(AV)',1HI,'  DENSI',1HI,/,11X,1H+,106(1H-), *
          81H+)                                                       *
      C-----DATA O YOMU-----                                            *
0015    300 READ(5,20)IZ,D1,D2,H,W                                      *
0016     20 FORMAT(I10,4(F10.3))                                        *
      C-----PELLET NI BANGO O UTU-----                                  *
0017        N=N+1                                                       *
      C-----FINAL DATA HANDAN-----                                      *
0018        IF(D1.EQ.0.) GO TO 1000                                     *
      C-----MITUD KEISAN-----                                           *
0019        D4=(D1+D2)/2.0                                              *
0020        D5=D4/10.0                                                  *
0021        V1=0.7854*D5**2*H/10.0                                      *
0022        V2=V1-C1                                                    *
0023        A=W/V2                                                      *
0024        ATD=A*100.0/C2                                              *
      C-----TOTAL O MOTOMERU-----                                       *
0025        DT=DT+D4                                                    *
0026        HT=HT+H                                                     *
0027        WT=WT+W                                                     *
0028        ATDT=ATDT+ATD                                               *
0029        ATT=ATT+A                                                   *
```

SOURCE LIST

```
C-----2JYO O MOTOMERU-----                                              *
      DS=DS+D4**2                                                       *
      WS=WS+W**2                                                        *
      ATDS=ATDS+ATD**2                                                  *
      AS=AS+A**2                                                        *
C-----SPEC NO HANTEI-----                                               *
      IF(D4.LT.B1.OR.D4.GT.B2) GO TO 30                                 *
      I1=1                                                              *
      P=Q1                                                              *
      GO TO 3000                                                        *
   30 I1=0                                                              *
      ID4=ID4+1                                                         *
      P=Q2                                                              *
 3000 IF(ATD.LT.B3.OR.ATD.GT.B4) GO TO 40                               *
      I2=1                                                              *
      R=Q1                                                              *
      GO TO 3500                                                        *
   40 I2=0                                                              *
      IATD=IATD+1                                                       *
      R=Q2                                                              *
 3500 I6=I1+I2                                                          *
      IF(I6.EQ.2) GO TO 55                                              *
      I8=I8+1                                                           *
      AB=Q2                                                             *
      GO TO 60                                                          *
   55 I7=I7+1                                                           *
      DIA1(I7)=D1                                                       *
      DIA2(I7)=D2                                                       *
      HEIG(I7)=H                                                        *
      WEIG(I7)=W                                                        *
      AMITUD(I7)=ATD                                                    *
      N1(I7)=IZ                                                         *
      HS=HS+H                                                           *
      I00=I7                                                            *
      AB=Q1                                                             *
   60 WRITE(6,65)IZ,D1,D2,D4,H,W,A,ATD,AB,P,R                           *
   65 FORMAT(11X,1HI,I4,7(1X,F10.3),1HI,3X,A1,2X,1HI,4X,A1,4X,1HI,      *
     14X,A1,2X,1HI)                                                     *
C-----PAGE GAE NO SEIGYO-----                                           *
      NN=N-N/50*50                                                      *
      IF(NN.EQ.0) GO TO 4                                               *
      GO TO 300                                                         *
    4 WRITE(6,2)                                                        *
    2 FORMAT(11X,1H+,106(1H-),1H+)                                      *
      GO TO 16                                                          *
      IF(NN.EQ.0) GO TO 16                                              *
      GO TO 300                                                         *
C-----HEIKIN TO SIGUMA O MOTOMERU-----                                  *
 1000 WRITE(6,3)                                                        *
    3 FORMAT(11X,1H+,106(1H-),1H+)                                      *
      N=N-1                                                             *
      DM=DT/FLOAT(N)                                                    *
      HM=HT/FLOAT(N)                                                    *
      WM=WT/FLOAT(N)                                                    *
      AM=ATT/FLOAT(N)                                                   *
```

SOURCE LIST

```
0080          ATDTT=ATDT/FLOAT(N)                                          *
0081          VATDTT=1.0/(FLOAT(N)-1.0)*(ATDS-FLOAT(N)*ATDTT**2)           *
0082          VATH=1.0/(FLOAT(N)-1.0)*(AS-FLOAT(N)*ATH**2)                 *
0083          VWTH=1.0/(FLOAT(N)-1.0)*(WS-FLOAT(N)*WTH**2)                 *
0084          VDH=1.0/(FLOAT(N)-1.0)*(DS-FLOAT(N)*DH**2)                   *
0085          SQ1=DSQRT(VDH)                                               *
0086          SQ2=DSQRT(VATH)                                              *
0087          SQ3=DSQRT(VATH)                                              *
0088          SQ4=DSQRT(VATDTT)                                            *
0089          WRITE(6,500)DH,SQ1,WTH,SQ2,ATH,SQ3,ATDTT,SQ4                 *
0090      500 FORMAT(1H1//////,39X,1H+,18(1H-),1H+,15(1H-),1H+,23(1H-),1H+,/,  *
             *39X,1HI,18X,1HI,4X,7HAVERAGE,4X,1HI,2X,18HSTANDERD DEVIATION,3X,  *
             *1HI,/,39X,1H+,18(1H-),1H+,15(1H-),1H+,23(1H-),1H+/,39X,1HI,18X,  *
             *1HI,15X,1HI,23X,1HI/,39X,1HI,2X,13HDIAMETER (MM),3X,1HI,4X,F7.3,  *
             *4X,1HI,7X,F10.7,6X,1HI/39X,1H+,18(1H-),1H+,15(1H-),1H+,23(1H-),  *
             *1H+,/,39X,1HI,18X,1HI,15X,1HI,23X,1HI/,39X,1HI,2X,13HWEIGHT    (G)  *
             *,3X,1HI,4X,F7.3,4X,1HI,7X,F10.7,6X,1HI/,39X,1H+,18(1H-),1H+,     *
             *15(1H-),1H+,23(1H-),1H+/,39X,1HI,18X,1HI,15X,1HI,23X,1HI/,       *
             *39X,1HI,2X,13HDENSITY(G/CC),3X,1HI,4X,F7.3,4X,1HI,7X,F10.7,6X,1HI,  *
             */,39X,1H+,18(1H-),1H+,15(1H-),1H+,23(1H-),1H+/,39X,1HI,18X,1HI,  *
             *15X,1HI,23X,1HI/,39X,1HI,2X,13HDENSITY (PER),3X,1HI,4X,F7.3,     *
             *4X,1HI,7X,F10.7,6X,1HI/,39X,1H+,18(1H-),1H+,15(1H-),1H+,23(1H-)) *
0091          WRITE(6,560)I7,I8,WT,HT                                      *
0092      560 FORMAT(///,50X,1H+,19(1H-),1H+,18(1H-),1H+/,50X,1HI,2X,       *
             117HGOKAKU    PELLET ,1HI,8X,I4,1X,4H(KO),1X,1HI/,50X,1H+,19(1H-),  *
             21H+,18(1H-),1H+/,50X,1HI,2X,17HFUGOKAKU  PELLET ,1HI,8X,I4,1X,   *
             34H(KO),1X,1HI/,50X,1H+,19(1H-) ,1H+,18(1H-),1H+/,50X,1HI,2X,     *
             417HTOTAL      WEIGHT ,1HI,4X,F8.3,2X,3H(G),1X,1HI/,50X,1H+,19(1H-),  *
             51H+,18(1H-),1H+/,50X,1HI,2X,17HTOTAL      HEIGHT ,1HI,3X,F9.3,1X,  *
             64H(MM),1X,1HI/,50X,1H+,19(1H-),1H+,18(1H-),1H+)                 *
0093          WRITE(6,566)ID4,IATD                                         *
0094      566 FORMAT(//,50X,'FUGOKAKU PELLET NO UCHIWAKE',/,               *
             150X,'DIA----------',I5,/,50X,'MITUDO--------',I5)              *
0095          CALL STAC (DIA1,DIA2,HEIG,WEIG,AMITUD,N1,HS,IGO,SPECL,SPECKH,    *
             *TITLE)                                                          *
0096          STOP                                                         *
0097          END                                                          *
```

STACK — I

SOURCE LIST

```
      C     HEIG=ONO-ONO-NO PELLET TAKASA
      C     DIA1=ONO-ONO-NO PELLET KEI                                      *
      C     DIA2=ONO-ONO-NO PELLET 90 DEG KEI                               *
      C     WEIG=ONO-ONO-NO PELLET OMOSA                                    *
      C     AMITUD=ONO-ONO-NO PELLET MITUDO                                 *
      C     N=ONO-ONO-NO PELLET NUMBER                                      *
      C     H1MR=HEIG NO MEMORY                                             *
      C     D1MR=DIA1 NO MEMORY                                             *
      C     D1DGMR=DIA2 NO MEMORY                                           *
      C     W1MR=WEIG NO MEMORY                                             *
      C     A1DEN=AMITUD NO MEMORY                                          *
      C     N1MR=N NO MEMORY                                                *
      C     A=STACK NAGASA                                                  *
0001        SUBROUTINE STAC  (DIA1,DIA2,HEIG,WEIG,AMITUD,N1,HS,IGOS,        *
           *SPECL,SPECKH,TITLE)                                             *
0002        DIMENSION H1MR(160,6),D1MR(160,6),D1DGMR(160,6),                *
           1W1MR(160,6),A1DEN(160,6),N1MR(160,6),A(10),JL2(10)              *
0003        DIMENSION HEIG(1000),DIA1(1000),DIA2(1000),WEIG(1000),          *
           *AMITUD(1000),N1(1000),TITLE(20)                                 *
      C     SYOKI JYOUKEN O KIMERU                                          *
0004        MS=0                                                            *
0005        SASAKI=(SPECKH-SPECL)/2.0+SPECL                                 *
0006        MIEKO=0                                                         *
0007     7500 K2=1                                                          *
0008        IGO=IGOS                                                        *
0009        KK=1                                                            *
0010        L2=0                                                            *
0011     1350 DO 152 LMN2=1,6                                               *
0012        DO 153 LMN3=1,160                                               *
0013        H1MR(LMN3,LMN2)=0.0                                             *
0014        D1MR(LMN3,LMN2)=0.0                                             *
0015        D1DGMR(LMN3,LMN2)=0.0                                           *
0016        W1MR(LMN3,LMN2)=0.0                                             *
0017        A1DEN(LMN3,LMN2)=0.0                                            *
0018        N1MR(LMN3,LMN2)=0                                               *
0019      153 CONTINUE                                                      *
0020        JL2(LMN2)=0                                                     *
0021        A(LMN2)=0.0                                                     *
0022      152 CONTINUE                                                      *
0023        I12=0                                                           *
0024        JKOSUU=HS/SASAKI                                                *
0025        NKOSUU=JKOSUU+1                                                 *
      C     ****************************************************************
      C     STACK NO NAGASA NI AWASERU                                      *
0026        DO 41 I1=1,NKOSUU                                               *
0027        DO 42 I2=K2,IGO                                                 *
0028        A(I1)=HEIG(I2)+A(I1)                                            *
0029        I12=I12+1                                                       *
0030        L2=L2+1                                                         *
0031        H1MR(I12,I1)=HEIG(I2)                                           *
0032        D1MR(I12,I1)=DIA1(I2)                                           *
0033        D1DGMR(I12,I1)=DIA2(I2)                                         *
0034        W1MR(I12,I1)=WEIG(I2)                                           *
0035        A1DEN(I12,I1)=AMITUD(I2)                                        *
0036        N1MR(I12,I1)=N1(I2)                                             *
```

SOURCE LIST

```
0037          JL2(I1)=II2                                                  *
0038          IF(IGO.EQ.L2) GO TO 190                                      *
0039          IF(SPECL-A(I1))52,21,42                                      *
0040       52 IF(SPECKH-A(I1))50,21,21                                     *
0041       42 CONTINUE                                                     *
0042       50 A(I1)=A(I1)-HEIG(L2)                                         *
0043          A1DEN(1,I1+1)=A1DEN(II2,I1)                                  *
0044          W1MR(1,I1+1)=W1MR(II2,I1)                                    *
0045          D1DGMR(1,I1+1)=D1DGMR(II2,I1)                                *
0046          D1MR(1,I1+1)=D1MR(II2,I1)                                    *
0047          H1MR(1,I1+1)=H1MR(II2,I1)                                    *
0048          N1MR(1,I1+1)=N1MR(II2,I1)                                    *
0049          L2=L2-1                                                      *
0050          II2=II2-1                                                    *
0051          JL2(I1)=II2                                                  *
0052       21 K2=L2+1                                                      *
0053          II2=0                                                        *
0054       41 CONTINUE                                                     *
        C     ***************************************************************
        C     SPECK HANTEI                                                 *
0055      190 JAMARI=0                                                     *
0056          DO 3 I3=1,JKOSUU                                             *
0057          L3=I3                                                        *
0058          IF(A(I3).LT.SPECL.OR.A(I3).GT.SPECKH) GO TO 101              *
0059        3 CONTINUE                                                     *
0060          GO TO 5000                                                   *
        C     ***************************************************************
        C     PELLET OKIKAE                                                *
0061      101 A(L3)=0.0                                                    *
0062          L=0                                                          *
0063      106 L=L+1                                                        *
0064      105 X1=H1MR(L,L3)                                                *
0065          X2=D1MR(L,L3)                                                *
0066          X3=D1DGMR(L,L3)                                              *
0067          X4=W1MR(L,L3)                                                *
0068          X5=A1DEN(L,L3)                                               *
0069          M1=N1MR(L,L3)                                                *
0070          IF(JL2(L3)-L)102,103,103                                     *
0071      103 JAMARI=JAMARI+1                                              *
0072          H1MR(L,L3)=H1MR(JAMARI,NKOSUU)                               *
0073          D1MR(L,L3)=D1MR(JAMARI,NKOSUU)                               *
0074          D1DGMR(L,L3)=D1DGMR(JAMARI,NKOSUU)                           *
0075          W1MR(L,L3)=W1MR(JAMARI,NKOSUU)                               *
0076          A1DEN(L,L3)=A1DEN(JAMARI,NKOSUU)                             *
0077          N1MR(L,L3)=N1MR(JAMARI,NKOSUU)                               *
0078          H1MR(JAMARI,NKOSUU)=X1                                       *
0079          D1MR(JAMARI,NKOSUU)=X2                                       *
0080          D1DGMR(JAMARI,NKOSUU)=X3                                     *
0081          W1MR(JAMARI,NKOSUU)=X4                                       *
0082          N1MR(JAMARI,NKOSUU)=M1                                       *
0083          A1DEN(JAMARI,NKOSUU)=X5                                      *
        C     SPECK HANTEI                                                 *
        C     ***************************************************************
0084          JBL=JL2(L3)                                                  *
0085          DO 4 I4=1,JBL                                                *
```

SOURCE LIST

```
0086          A(L3)=A(L3)+H1MR(I4,L3)                                          *
0087        4 CONTINUE                                                         *
0088          IF(A(L3).LT.SPECL.OR.A(L3).GT.SPECKH) GO TO 104                  *
0089          GO TO 190                                                        *
        C     ******************************************************************
0090      104 A(L3)=0.0                                                        *
0091          X6=H1MR(L,L3)                                                    *
0092          X7=D1MR(L,L3)                                                    *
0093          X8=D1DGMR(L,L3)                                                  *
0094          X9=W1MR(L,L3)                                                    *
0095          X10=A1DEN(L,L3)                                                  *
0096          M2=N1MR(L,L3)                                                    *
0097          H1MR(L,L3)=H1MR(JAMARI,NKOSUU)                                   *
0098          D1MR(L,L3)=D1MR(JAMARI,NKOSUU)                                   *
0099          D1DGMR(L,L3)=D1DGMR(JAMARI,NKOSUU)                               *
0100          W1MR(L,L3)=W1MR(JAMARI,NKOSUU)                                   *
0101          N1MR(L,L3)=N1MR(JAMARI,NKOSUU)                                   *
0102          A1DEN(L,L3)=A1DEN(JAMARI,NKOSUU)                                 *
0103          H1MR(JAMARI,NKOSUU)=X6                                           *
0104          D1MR(JAMARI,NKOSUU)=X7                                           *
0105          D1DGMR(JAMARI,NKOSUU)=X8                                         *
0106          W1MR(JAMARI,NKOSUU)=X9                                           *
0107          A1DEN(JAMARI,NKOSUU)=X10                                         *
0108          N1MR(JAMARI,NKOSUU)=M2                                           *
0109          IF(JAMARI.EQ.JL2(NKOSUU)) GO TO 107                              *
0110          GO TO 105                                                        *
0111      107 JAMARI=0                                                         *
0112          GO TO 106                                                        *
0113      102 KK=KK+1                                                          *
0114          K2=KK                                                            *
0115          IGO=IGO+1                                                        *
0116          K3=K2-1                                                          *
0117          L2=K3                                                            *
0118          N1(IGO)=N1(K3)                                                   *
0119          HEIG(IGO)=HEIG(K3)                                               *
0120          DIA1(IGO)=DIA1(K3)                                               *
0121          DIA2(IGO)=DIA2(K3)                                               *
0122          WEIG(IGO)=WEIG(K3)                                               *
0123          AMITUD(IGO)=AMITUD(K3)                                           *
0124          IF(K2.EQ.JL2(L3)) GO TO 1250                                     *
0125          GO TO 1350                                                       *
        C     ******************************************************************
0126     1250 S5=100.0                                                         *
0127          S6=0.0                                                           *
0128          KKP=0                                                            *
0129          DO 252 LOVE=1,JKOSUU                                             *
0130          KKP=KKP+JL2(LOVE)                                                *
0131      252 CONTINUE                                                         *
0132          DO 250 NHK=1,KKP                                                 *
0133          IF(S5.LT.HEIG(NHK)) GO TO 251                                    *
0134          GO TO 250                                                        *
0135      251 S5=HEIG(NHK)                                                     *
0136          IBC=NHK                                                          *
0137      250 CONTINUE                                                         *
0138          LN=KKP+1                                                         *
```

SOURCE LIST

```
      DO 255 NTV=LN,IGOS
      IF(S6.GT.HEIG(NTV)) GO TO 300
      GO TO 255
  300 S6=HEIG(NTV)
      IWATE=NTV
  255 CONTINUE
      XX1=HEIG(IBC)
      XX2=DIA1(IBC)
      XX3=DIA2(IBC)
      XX4=WEIG(IBC)
      XX5=AMITUD(IBC)
      KC=N1(IBC)
      HEIG(IBC)=HEIG(IWATE)
      DIA1(IBC)=DIA1(IWATE)
      DIA2(IBC)=DIA2(IWATE)
      WEIG(IBC)=WEIG(IWATE)
      AMITUD(IBC)=AMITUD(IWATE)
      N1(IBC)=N1(IWATE)
      HEIG(IWATE)=XX1
      DIA1(IWATE)=XX2
      DIA2(IWATE)=XX3
      WEIG(IWATE)=XX4
      AMITUD(IWATE)=XX5
      N1(IWATE)=KC
      MIEKO=MIEKO+1
      IF(MIEKO.EQ.JL2(1)) GO TO 202
      GO TO 7500
 5000 DO 11 JAL1=1,NKOSUU
      JUPTER=1
      W=0.0
      JCA=JL2(JAL1)
      JIN=JCA-1
      DO 19 KIMIKO=1,JIN
      IIONNA=KIMIKO+1
      DO 20 JEMMY=IIONNA,JCA
      IF(N1MR(KIMIKO,JAL1).LT.N1MR(JEMMY,JAL1)) GO TO 20
      KB=N1MR(KIMIKO,JAL1)
      Z1=D1MR(KIMIKO,JAL1)
      Z2=D1DGMR(KIMIKO,JAL1)
      Z3=H1MR(KIMIKO,JAL1)
      Z4=W1MR(KIMIKO,JAL1)
      Z5=A1DEN(KIMIKO,JAL1)
      N1MR(KIMIKO,JAL1)=N1MR(JEMMY,JAL1)
      D1MR(KIMIKO,JAL1)=D1MR(JEMMY,JAL1)
      D1DGMR(KIMIKO,JAL1)=D1DGMR(JEMMY,JAL1)
      H1MR(KIMIKO,JAL1)=H1MR(JEMMY,JAL1)
      W1MR(KIMIKO,JAL1)=W1MR(JEMMY,JAL1)
      A1DEN(KIMIKO,JAL1)=A1DEN(JEMMY,JAL1)
      N1MR(JEMMY,JAL1)=KB
      D1MR(JEMMY,JAL1)=Z1
      D1DGMR(JEMMY,JAL1)=Z2
      H1MR(JEMMY,JAL1)=Z3
      W1MR(JEMMY,JAL1)=Z4
      A1DEN(JEMMY,JAL1)=Z5
   20 CONTINUE
```

SOURCE LIST

```
0194          19 CONTINUE                                                    *
0195           5 MS=MS+1                                                     *
0196             WRITE(6,6)(TITLE(M),M=1,20)                                 *
0197           6 FORMAT(1H1,/,31X,20A4)                                      *
0198             WRITE(6,10)JAL1,MS                                          *
0199          10 FORMAT(1X,1H+,11(1H-),1H+,16X,80(1H-),10X,1H+,9(1H-),1H+,/, *
                11X,1HI,8H FIN NO ,I2,1X,1HI,106X,1HI,' PAGE',I2,2X,1HI,/,   *
                21X,1H+,11(1H-),1H+,106X,1H+,9(1H-),1H+,/,13X,1H+,117(1H-),  *
                31H+,/,13X,1HI,' PELLET NO. ',1HI,'  DIAMETER(X-AXIS)  ',1HI, *
                4'  DIAMETER(Y-AXIS)  ',1HI,7X,'HEIGHT',7X,1HI,7X,'WEIGHT',7X,1HI, *
                56X,'DENSITY',7X,1HI,/,13X,1HI,12X,1HI,14X,'(MM)',2X,1HI,14X, *
                6'(MM)',2X,1HI,9X,'(MM)',7X,1HI,7X,'(GRAM)',7X,1HI,4X,       *
                7'(PERCENT)',7X,1HI,/,                                       *
                613X,1H+,117(1H-),1H+)                                       *
0200             DO 12 JAL2=JUPTER,JCA                                       *
0201             WRITE(6,91)N1MR(JAL2,JAL1),D1MR(JAL2,JAL1),D1DGMR(JAL2,JAL1), *
                1H1MR(JAL2,JAL1),W1MR(JAL2,JAL1),A1DEN(JAL2,JAL1)            *
0202          91 FORMAT(13X,1HI,4X,I4,4X,5(1HI,7X,F10.3,3X),1HI)             *
0203             W=W+W1MR(JAL2,JAL1)                                         *
0204             MUF=JAL2-JAL2/50*50                                         *
0205             IF(MUF.EQ.0) GO TO 7                                        *
0206          12 CONTINUE                                                    *
0207             WRITE(6,500)A(JAL1),W                                       *
0208         500 FORMAT(13X,1H+,117(1H-),1H+,//,60X,'TOTAL HEIGHT ',F10.3,   *
               11X,'(MM)',/,60X,'TOTAL WEIGHT ',F10.3,1X,'(GRAM)')           *
0209          11 CONTINUE                                                    *
0210             GO TO 203                                                   *
0211         202 WRITE(6,201)                                                *
0212         201 FORMAT(1H1,////////,40X,'SAKURA TIIRU')                     *
0213             GO TO 203                                                   *
0214           7 JUPTER=JAL2+1                                               *
0215             WRITE(6,205)                                                *
0216         205 FORMAT(13X,1H+,117(1H-),1H+)                                *
0217             GO TO 5                                                     *
0218         203 RETURN                                                      *
0219             END                                                         *
```

STACK — Ⅱ

SOURCE LIST

```
      C     +-----------------------------------------------------+
      C     I DIA1=X-AXIS PELLET DIANETER                         I
      C     I DIA2=Y-AXIS PELLET DIANETER                         I
      C     I HEIG=PELLET HEIGHT                                  I
      C     I WEIG=PELLET WEIGHT                                  I
      C     I AMITUD=PELLET MITUD                                 I
      C     I N1=PELLET NUMBER                                    I
      C     I HS=GOKAKU PELLET TOTAL HEIGHT                       I
      C     I IGOS=GOKAKU PELLET KOSUU                            I
      C     I H1MR=HEIG MEMORY                                    I
      C     I D1MR=DIA1 MEMORY                                    I
      C     I D1DGMR=DIA2 MEMORY                                  I
      C     I W1MR=WEIG MEMORY                                    I
      C     I A1DEN=AMITUD MEMORY                                 I
      C     I N1MR=N1 MEMORY                                      I
      C     I A=STACK LENGTH MEMORY                               I
      C     +-----------------------------------------------------+
      C     +------------+
      C     I SUBROUTINE I
      C     +------------+
0001        SUBROUTINE STACK (DIA1,DIA2,HEIG,WEIG,AMITUD,N1,HS,IGOS,
           *SPECL,SPECKH,DELTA,TITLE)
      C     +------------+
      C     I DIMENSION  I
      C     +------------+
0002        DIMENSION HEIG(250),DIA1(250),DIA2(250),WEIG(250),AMITUD(250),
           *N1(250),IB(3),TITLE(20)
0003        DIMENSION H1MR(25,15,3),D1MR(25,15,3),D1DGMR(25,15,3),
           *W1MR(25,15,3),A1DEN(25,15,3),N1MR(25,15,3),A(15,3),
           *JL2(15,3)
0004        DIMENSION NCTS(20)
      C     +---------------+
      C     I SYOKI JYOUKEN I
      C     +---------------+
0005        W=0.0
0006        KK=1
0007        L2=0
0008        IB(2)=0
0009        IB(3)=0
0010        K2=1
0011        IGO=IGOS
0012   1350 DO 152 IRC=1,2
0013        DO 152 LMN2=1,15
0014        DO 153 LMN3=1,25
0015        H1MR(LMN3,LMN2,IRC)=0.0
0016        D1MR(LMN3,LMN2,IRC)=0.0
0017        D1DGMR(LMN3,LMN2,IRC)=0.0
0018        W1MR(LMN3,LMN2,IRC)=0.0
0019        A1DEN(LMN3,LMN2,IRC)=0.0
0020        N1MR(LMN3,LMN2,IRC)=0
0021    153 CONTINUE
0022        A(LMN2,IRC)=0.0
0023        JL2(LMN2,IRC)=0.0
0024    152 CONTINUE
0025        IJ=1
```

SOURCE LIST.

```
0026          JAMARI=0                                                  *
0027          MINKU=0                                                   *
0028          II2=0                                                     *
0029          JKOSUU=HS/SPECKH                                          *
0030          NKOSUU=JKOSUU+1                                           *
0031          JG=SPECKH/HEIG(1)                                         *
0032          JJJ=JG*2                                                  *
        C     +-------------------------+                               *
        C     ISTACK NO NAGASA NI AWASERU I                             *
        C     +-------------------------+                               *
0033          DO 41 I1=1,NKOSUU                                         *
0034          DO 42 I2=K2,IGO                                           *
0035          A(I1,1)=HEIG(I2)+A(I1,1)                                  *
0036          II2=II2+1                                                 *
0037          L2=L2+1                                                   *
0038          H1MR(II2,I1,1)=HEIG(I2)                                   *
0039          D1MR(II2,I1,1)=DIA1(I2)                                   *
0040          D1DGMR(II2,I1,1)=DIA2(I2)                                 *
0041          W1MR(II2,I1,1)=WEIG(I2)                                   *
0042          A1DEN(II2,I1,1)=AMITUD(I2)                                *
0043          N1MR(II2,I1,1)=N1(I2)                                     *
0044          JL2(I1,1)=II2                                             *
0045          IF(IGO.EQ.L2) GO TO 190                                   *
0046          IF(SPECL-DELTA-A(I1,1))52,21,42                           *
0047       52 IF(SPECKH+DELTA-A(I1,1))50,21,21                          *
0048       42 CONTINUE                                                  *
0049       50 A(I1,1)=A(I1,1)-HEIG(L2)                                  *
0050          A1DEN(1,I1+1,1)=A1DEN(II2,I1,1)                           *
0051          W1MR(1,I1+1,1)=W1MR(II2,I1,1)                             *
0052          D1DGMR(1,I1+1,1)=D1DGMR(II2,I1,1)                         *
0053          D1MR(1,I1+1,1)=D1MR(II2,I1,1)                             *
0054          H1MR(1,I1+1,1)=H1MR(II2,I1,1)                             *
0055          N1MR(1,I1+1,1)=N1MR(II2,I1,1)                             *
0056          L2=L2-1                                                   *
0057          II2=II2-1                                                 *
0058          JL2(I1,1)=II2                                             *
0059       21 K2=L2+1                                                   *
0060          II2=0                                                     *
0061       41 CONTINUE                                                  *
        C     +---------------+                                         *
        C     I SPECK HANTEI I                                          *
        C     +---------------+                                         *
0062      190 IB(IO)=0                                                  *
0063          IKAN=0                                                    *
0064          DO 3 I3=1,JKOSUU                                          *
0065          IF(A(I3,IO).LT.SPECL.OR.A(I3,IO).GT.SPECKH) GO TO 390     *
0066          IB(IO)=IB(IO)+1                                           *
0067          IF(IB(IO).EQ.JKOSUU) GO TO 410                            *
0068          GO TO 3                                                   *
0069      390 IKAN=IKAN+1                                               *
0070          NOTS(IKAN)=I3                                             *
0071        3 CONTINUE                                                  *
0072          IF(MINKU.EQ.1) GO TO 102                                  *
0073          IF(JL2(NKOSUU,IO).EQ.0) GO TO 102                         *
        C     +-----------------------+                                 *
```

SOURCE LIST

```
C       I PELLET OKIKAE (X-AXIS) I
C       +-------------------------+
        DO 15 ING=1,IKAK
        L3=NOTS(ING)
        A(L3,I0)=0.0
        JAMARI=0
        L=0
  106   L=L+1
  105   X1=H1MR(L,L3,I0)
        X2=D1MR(L,L3,I0)
        X3=D1DGMR(L,L3,I0)
        X4=W1MR(L,L3,I0)
        X5=A1DEN(L,L3,I0)
        M1=N1MR(L,L3,I0)
        IF(JL2(L3,I0)-L)15,103,103
  103   JAMARI=JAMARI+1
        W1MR(L,L3,I0)=W1MR(JAMARI,NKOSUU,I0)
        A1DEN(L,L3,I0)=A1DEN(JAMARI,NKOSUU,I0)
        N1MR(L,L3,I0)=N1MR(JAMARI,NKOSUU,I0)
        D1DGMR(L,L3,I0)=D1DGMR(JAMARI,NKOSUU,I0)
        D1MR(L,L3,I0)=D1MR(JAMARI,NKOSUU,I0)
        H1MR(L,L3,I0)=H1MR(JAMARI,NKOSUU,I0)
        H1MR(JAMARI,NKOSUU,I0)=X1
        D1MR(JAMARI,NKOSUU,I0)=X2
        D1DGMR(JAMARI,NKOSUU,I0)=X3
        W1MR(JAMARI,NKOSUU,I0)=X4
        A1DEN(JAMARI,NKOSUU,I0)=X5
        N1MR(JAMARI,NKOSUU,I0)=M1
C       +-------------------------+
C       I OKIKAE PELLT SPECK MANTEI I
C       +-------------------------+
        JBL=JL2(L3,I0)
        DO 4 I4=1,JBL
        A(L3,I0)=A(L3,I0)+H1MR(I4,L3,I0)
    4   CONTINUE
        IF(A(L3,I0).LT.SPECL.OR.A(L3,I0).GT.SPECKH) GO TO 80
        GO TO 190
C       +-----------------------------------------------------+
C       I SPECK NI AWANAITAME OKIKAETA PELLET O MOTONI MODOSU I
C       +-----------------------------------------------------+
   80   A(L3,I0)=0.0
        X6=H1MR(L,L3,I0)
        X7=D1MR(L,L3,I0)
        X8=D1DGMR(L,L3,I0)
        X9=W1MR(L,L3,I0)
        X10=A1DEN(L,L3,I0)
        M2=N1MR(L,L3,I0)
        H1MR(L,L3,I0)=H1MR(JAMARI,NKOSUU,I0)
        D1MR(L,L3,I0)=D1MR(JAMARI,NKOSUU,I0)
        D1DGMR(L,L3,I0)=D1DGMR(JAMARI,NKOSUU,I0)
        W1MR(L,L3,I0)=W1MR(JAMARI,NKOSUU,I0)
        N1MR(L,L3,I0)=N1MR(JAMARI,NKOSUU,I0)
        A1DEN(L,L3,I0)=A1DEN(JAMARI,NKOSUU,I0)
        H1MR(JAMARI,NKOSUU,I0)=X6
        D1MR(JAMARI,NKOSUU,I0)=X7
```

SOURCE LIST

```
0121          D1DGMR(JAMARI,NKOSUU,IO)=X8                                  *
0122          W1MR(JAMARI,NKOSUU,IO)=X9                                    *
0123          A1DEN(JAMARI,NKOSUU,IO)=X10                                  *
0124          N1MR(JAMARI,NKOSUU,IO)=M2                                    *
0125          IF(JAMARI.NE.JL2(NKOSUU,IO))GO TO 105                        *
0126          JAMARI=0                                                     *
0127          GO TO 106                                                    *
0128       15 CONTINUE                                                     *
0129          MINKU=1                                                      *
0130          GO TO 190                                                    *
        C     +-------------------------+                                  *
        C     I PELLET OKIKAE (Y-AXIS) I                                   *
        C     +-------------------------+                                  *
0131      102 IF(IO-2)400,410,410                                          *
0132      400 KY3=1                                                        *
0133          KASIMA=0                                                     *
0134          MA=0                                                         *
0135          IO=2                                                         *
0136          KICK=1                                                       *
0137          DO 1 JOKE=1,JJJ                                              *
0138       82 DO 2 JOY=KY3,NKOSUU                                          *
0139          A(KICK,2)=A(KICK,2)+H1MR(JOKE,JOY,1)                         *
0140          KASIMA=KASIMA+1                                              *
0141          MA=MA+1                                                      *
0142          H1MR(KASIMA,KICK,2)=H1MR(JOKE,JOY,1)                         *
0143          D1MR(KASIMA,KICK,2)=D1MR(JOKE,JOY,1)                         *
0144          D1DGMR(KASIMA,KICK,2)=D1DGMR(JOKE,JOY,1)                     *
0145          W1MR(KASIMA,KICK,2)=W1MR(JOKE,JOY,1)                         *
0146          A1DEN(KASIMA,KICK,2)=A1DEN(JOKE,JOY,1)                       *
0147          N1MR(KASIMA,KICK,2)=N1MR(JOKE,JOY,1)                         *
0148          JL2(KICK,2)=KASIMA                                           *
0149          IF(JJJ.EQ.MA) GO TO 190                                      *
0150          IF(SPECL-DELTA-A(KICK,2))300,315,2                           *
0151      300 IF(SPECKH+DELTA-A(KICK,2))305,315,315                        *
0152        2 CONTINUE                                                     *
0153          KY3=1                                                        *
0154          GO TO 1                                                      *
0155      305 A(KICK,2)=A(KICK,2)-H1MR(JOKE,JOY,1)                         *
0156          A1DEN(1,KICK+1,2)=A1DEN(KASIMA,KICK,2)                       *
0157          W1MR(1,KICK+1,2)=W1MR(KASIMA,KICK,2)                         *
0158          D1DGMR(1,KICK+1,2)=D1DGMR(KASIMA,KICK,2)                     *
0159          D1MR(1,KICK+1,2)=D1MR(KASIMA,KICK,2)                         *
0160          H1MR(1,KICK+1,2)=H1MR(KASIMA,KICK,2)                         *
0161          N1MR(1,KICK+1,2)=N1MR(KASIMA,KICK,2)                         *
0162          KASIMA=KASIMA-1                                              *
0163          MA=MA-1                                                      *
0164          JL2(KICK,2)=KASIMA                                           *
0165      315 IF(NKOSUU-JOY)350,350,355                                    *
0166      350 KY3=1                                                        *
0167          KICK=KICK+1                                                  *
0168          KASIMA=0                                                     *
0169          GO TO 1                                                      *
0170      355 KY3=JOY+1                                                    *
0171      360 KICK=KICK+1                                                  *
0172          KASIMA=0                                                     *
```

SOURCE LIST

```
0173          GO TO 82                                                  *
0174        1 CONTINUE                                                  *
0175      410 IF(IB(1)-IB(2))450,451,451                                *
0176      450 IF(IB(2)-IB(3))460,461,461                                *
0177      451 IF(IB(1)-IB(3))460,471,471                                *
0178      460 MAGIC=3                                                   *
0179          GO TO 600                                                 *
0180      461 MAGIC=2                                                   *
0181          GO TO 600                                                 *
0182      471 MAGIC=1                                                   *
0183      600 IB(3)=IB(MAGIC)                                           *
0184          DO 650 MISS=1,NKOSUU                                      *
0185          KNOCK=JL2(MISS,MAGIC)                                     *
0186          JL2(MISS,3)=KNOCK                                         *
0187          A(MISS,3)=A(MISS,MAGIC)                                   *
0188          INX=0                                                     *
0189          DO 650 NAME=1,KNOCK                                       *
0190          IF(H1MR(NAME,MISS,MAGIC).EQ.0.0) GO TO 651                *
0191          INX=INX+1                                                 *
0192          D1DGMR(INX,MISS,3)=D1DGMR(NAME,MISS,MAGIC)                *
0193          H1MR(INX,MISS,3)=H1MR(NAME,MISS,MAGIC)                    *
0194          D1MR(INX,MISS,3)=D1MR(NAME,MISS,MAGIC)                    *
0195          W1MR(INX,MISS,3)=W1MR(NAME,MISS,MAGIC)                    *
0196          N1MR(INX,MISS,3)=N1MR(NAME,MISS,MAGIC)                    *
0197          A1DEN(INX,MISS,3)=A1DEN(NAME,MISS,MAGIC)                  *
0198          GO TO 650                                                 *
0199      651 JL2(MISS,3)=JL2(MISS,3)-1                                 *
0200      650 CONTINUE                                                  *
0201          IF(IB(MAGIC).EQ.JKOSUU) GO TO 5000                        *
        C     +-----------------+                                       *
        C     I PELLET O ZURASU I                                       *
        C     +-----------------+                                       *
0202          KK=KK+1                                                   *
0203          K2=KK                                                     *
0204          IGO=IGO+1                                                 *
0205          K3=K2-1                                                   *
0206          L2=K3                                                     *
0207          N1(IGO)=N1(K3)                                            *
0208          HEIG(IGO)=HEIG(K3)                                        *
0209          DIA1(IGO)=DIA1(K3)                                        *
0210          DIA2(IGO)=DIA2(K3)                                        *
0211          WEIG(IGO)=WEIG(K3)                                        *
0212          AMITUD(IGO)=AMITUD(K3)                                    *
0213          IF(K2.EQ.JL2(1,3)) GO TO 5000                             *
0214          GO TO 1350                                                *
0215     5000 LIST=JKOSUU                                               *
0216          DO 11 JAL1=1,LIST                                         *
0217          WRITE(6,498)(TITLE(LS),LS=1,20)                           *
0218      498 FORMAT(1H1,/30X,20A4,/,30X,80(1H-),)                      *
0219          WRITE(6,501)JAL1                                          *
0220      501 FORMAT(1X,1H+,12(1H-),1H+,/,1X,1HI,                       *
           *7HPIN NO.,I3,2X,1HI,                                        *
           */,1X,1H+,12(1H-),1H+,/,13X,1H+,113(1H-),1H+/13X,1HI,10HPELLET NO.,  *
           *2X,1HI,5X,8HDIAMETER,6X,1HI,5X,8HDIAMETER,6X,1HI,7X,6HHEIGHT,6X,  *
           *1HI,7X,6HWEIGHT,6X,1HI,5X,8HDENSITEY,7X,1HI,/,13X,1HI,12X,1HI,9X,  *
```

SOURCE LIST

```
                *4H(MM),6X,1HI,9X,4H(MM),6X,1HI,9X,4H(MM),6X,1HI,10X,3H(G),6X,1HI,          *
                *4X,9H(PERCENT),7X,1HI,/,13X,1H+,12(1H-),1H+,19(1H-),1H+,19(1H-),          *
                *1H+,19(1H-),1H+,19(1H-),1H+,20(1H-),1H+,/,13X,1HI,12X,1HI,19X,1HI,        *
                *19X,1HI,19X,1HI,19X,1HI,20X,1HI,/,13X,1HI,12X,1HI,19X,1HI,19X,1HI,        *
                *19X,1HI,19X,1HI,20X,1HI)                                                  *
0221             JCA=JL2(JAL1,3)                                                           *
0222             DO 12 JAL2=1,JCA                                                          *
0223             W=W+W1MR(JAL2,JAL1,3)                                                     *
0224             WRITE(6,91)N1MR(JAL2,JAL1,3),D1MR(JAL2,JAL1,3),D1DGMR(JAL2,JAL1,3)        *
                *,H1MR(JAL2,JAL1,3),W1MR(JAL2,JAL1,3),A1DEN(JAL2,JAL1,3)                   *
0225          91 FORMAT(13X,1HI,12X,1HI,19X,1HI,19X,1HI,19X,1HI,19X,1HI,20X,1HI,/,         *
                *13X,1HI,5X,I4,3X,1HI,3X,F10.3,6X,1HI,3X,F10.3,6X,1HI,3X,F10.3,6X,          *
                *1HI,3X,F10.3,6X,1HI,6X,F7.3,7X,1HI)                                        *
0226          12 CONTINUE                                                                  *
0227             WRITE(6,500)JAL1,A(JAL1,3),JAL1,W                                         *
0228         500 FORMAT(13X,1HI,12X,1HI,19X,1HI,19X,1HI,19X,1HI,19X,1HI,20X,1HI,/          *
                *13X,1H+,12(1H-),1H+,19(1H-),1H+,19(1H-),1H+,19(1H-),1H+,19(1H-),          *
                *1H+,20(1H-),1H+,/,88X,7HPIN NO.,1X,I3,1X,12HTOTAL HEIGHT,1X,F7.3,          *
                *3X,4H(MM),/,86X,7HPIN NO.,1X,I3,1X,12HTOTAL WEIGHT,2X,F6.3,1X,            *
                *6H(GRAM),///,13X,1H+,3(1H-),1X,4HMEMO,1X,104(1H-),1H+,/,                  *
                *22(13X,1HI,113X,1HI/), 13X,1H+,113(1H-),1H+)                              *
0229             W=0.0                                                                     *
0230          11 CONTINUE                                                                  *
0231             WRITE(6,499)(TITLE(LS),LS=1,20)                                           *
0232         499 FORMAT(1HI,/30X,20A4,/,30X,80(1H-),/)                                     *
0233             WRITE(6,504)                                                              *
0234         504 FORMAT(1X,1H+,15(1H-),1H+,/,1X,1HI,1X,                                    *
                * 10HNOKORI PELLET,1X,1HI,                                                  *
                */,1X,1H+,15(1H-),1H+,/,13X,1H+,113(1H-),1H+/13X,1HI,10HPELLET NO.,        *
                *2X,1HI,5X,8HDIAMETER,6X,1HI,5X,8HDIAMETER,6X,1HI,7X,6HHEIGHT,6X,          *
                *1HI,7X,6HWEIGHT,6X,1HI,5X,8HDENSITEY,7X,1HI,/,13X,1HI,12X,1HI,9X,         *
                *4H(MM),6X,1HI,9X,4H(MM),6X,1HI,9X,4H(MM),6X,1HI,10X,3H(G),6X,1HI,         *
                *4X,9H(PERCENT),7X,1HI,/,13X,1H+,12(1H-),1H+,19(1H-),1H+,19(1H-),          *
                *1H+,19(1H-),1H+,19(1H-),1H+,20(1H-),1H+,/,13X,1HI,12X,1HI,19X,1HI,        *
                *19X,1HI,19X,1HI,19X,1HI,20X,1HI,/,13X,1HI,12X,1HI,19X,1HI,19X,1HI,        *
                *19X,1HI,19X,1HI,20X,1HI)                                                  *
0235             MU=JL2(NKOSUU,3)                                                          *
0236             DO 13 JAL3=1,MU                                                           *
0237             WRITE(6,505) N1MR(JAL3,NKOSUU,3),D1MR(JAL3,NKOSUU,3),D1DGMR(JAL3,         *
                *NKOSUU,3),H1MR(JAL3,NKOSUU,3),W1MR(JAL3,NKOSUU,3),A1DEN(JAL3,             *
                *NKOSUU,3)                                                                 *
0238         505 FORMAT(13X,1HI,12X,1HI,19X,1HI,19X,1HI,19X,1HI,19X,1HI,20X,1HI,/,         *
                *13X,1HI,5X,I4,3X,1HI,3X,F10.3,6X,1HI,3X,F10.3,6X,1HI,3X,F10.3,6X,          *
                *1HI,3X,F10.3,6X,1HI,6X,F7.3,7X,1HI)                                        *
0239          13 CONTINUE                                                                  *
0240             WRITE(6,506)                                                              *
0241         506 FORMAT(13X,1HI,12X,1HI,19X,1HI,19X,1HI,19X,1HI,19X,1HI,20X,1HI,/          *
                *13X,1H+,12(1H-),1H+,19(1H-),1H+,19(1H-),1H+,19(1H-),1H+,19(1H-),          *
                *1H+,20(1H-),1H+)                                                          *
0242         201 RETURN                                                                    *
0243             END                                                                       *
```

STACK — Ⅲ

SOURCE LIST

```
C     +-----------------------------------------------------+
C     I DIA1=X-AXIS PELLET DIANETER                         I
C     I DIA2=Y-AXIS PELLET DIANETER                         I
C     I HEIG=PELLET HEIGHT                                  I
C     I WEIG=PELLET WEIGHT                                  I
C     I AMITUD=PELLET MITUD                                 I
C     I N1=PELLET NUMBER                                    I
C     I HS=GOKAKU PELLET TOTAL HEIGHT                       I
C     I IGOS=GOKAKU PELLET KOSUU                            I
C     I H1MR=HEIG MEMORY                                    I
C     I D1MR=DIA1 MEMORY                                    I
C     I D1DGMR=DIA2 MEMORY                                  I
C     I W1MR=WEIG MEMORY                                    I
C     I A1DEN=AMITUD MEMORY                                 I
C     I N1MR=N1 MEMORY                                      I
C     I A=STACK LENGTH MEMORY                               I
C     +-----------------------------------------------------+
C     +-------------+
C     I SUBROUTINE I
C     +-------------+
      SUBROUTINE STACK (DIA1,DIA2,HEIG,WEIG,AMITUD,N1,HS,IGOS,
     *SPECL,SPECKH,DELTA,TITLE)
C     +-------------+
C     I DIMENSION  I
C     +-------------+
      DIMENSION HEIG(500),DIA1(500),DIA2(500),WEIG(500),
     *AMITUD(500),N1(500),IB(3),TITLE(20)
      DIMENSION H1MR(300,3,3),D1MR(300,3,3),D1DGMR(300,3,3),
     *W1MR(300,3,3),A1DEN(300,3,3),N1MR(300,3,3),A(5,3),JL2(5,3)
      DIMENSION NOTS(20)
      DIMENSION III(15),NIPPON(15)
      DOUBLE PRECISION W,H
      SASAKI=(SPECKH-SPECL)/2.0+SPECL
C     +---------------+
C     I SYOKI JYOUKEN I
C     +---------------+
      MS=0
      H=0.0
      W=0.0
      KK=1
      JG=SPECKH/HEIG(1)
      JJJ=JG*2
      L2=0
      IB(2)=0
      IB(3)=0
      K2=1
      IGO=IGOS
 1350 DO 152 IRC=1,2
      DO 152 LMN2=1,3
      DO 153 LMN3=1,300
      H1MR(LMN3,LMN2,IRC)=0.0
      D1MR(LMN3,LMN2,IRC)=0.0
      D1DGMR(LMN3,LMN2,IRC)=0.0
      W1MR(LMN3,LMN2,IRC)=0.0
      A1DEN(LMN3,LMN2,IRC)=0.0
```

SOURCE LIST

```
0027          N1MR(LMN3,LMN2,IRC)=0                                          *
0028      153 CONTINUE                                                       *
0029          A(LMN2,IRC)=0.0                                                *
0030          JL2(LMN2,IRC)=0.0                                              *
0031      152 CONTINUE                                                       *
0032          I0=1                                                           *
0033          MINKU=0                                                        *
0034          II2=0                                                          *
0035          JKOSUU=HS/SASAKI                                               *
0036          NKOSUU=JKOSUU+1                                                *
        C     +-------------------------+                                    *
        C     ISTACK NO NAGASA NI AWASERU I                                  *
        C     +-------------------------+                                    *
0037          DO 41 I1=1,NKOSUU                                              *
0038          DO 42 I2=K2,IGO                                                *
0039          A(I1,1)=HEIG(I2)+A(I1,1)                                       *
0040          II2=II2+1                                                      *
0041          L2=L2+1                                                        *
0042          H1MR(II2,I1,1)=HEIG(I2)                                        *
0043          D1MR(II2,I1,1)=DIA1(I2)                                        *
0044          D1DGMR(II2,I1,1)=DIA2(I2)                                      *
0045          W1MR(II2,I1,1)=WEIG(I2)                                        *
0046          A1DEN(II2,I1,1)=AMITUD(I2)                                     *
0047          N1MR(II2,I1,1)=N1(I2)                                          *
0048          JL2(I1,1)=II2                                                  *
0049          IF(IGO.EQ.L2) GO TO 190                                        *
0050          IF(SPECL-DELTA-A(I1,1))52,21,42                                *
0051       52 IF(SPECKH+DELTA-A(I1,1))50,21,21                               *
0052       42 CONTINUE                                                       *
0053       50 A(I1,1)=A(I1,1)-HEIG(L2)                                       *
0054          A1DEN(1,I1+1,1)=A1DEN(II2,I1,1)                                *
0055          W1MR(1,I1+1,1)=W1MR(II2,I1,1)                                  *
0056          D1DGMR(1,I1+1,1)=D1DGMR(II2,I1,1)                              *
0057          D1MR(1,I1+1,1)=D1MR(II2,I1,1)                                  *
0058          H1MR(1,I1+1,1)=H1MR(II2,I1,1)                                  *
0059          N1MR(1,I1+1,1)=N1MR(II2,I1,1)                                  *
0060          L2=L2-1                                                        *
0061          II2=II2-1                                                      *
0062          JL2(I1,1)=II2                                                  *
0063       21 K2=L2+1                                                        *
0064          II2=0                                                          *
0065       41 CONTINUE                                                       *
        C     +---------------+                                              *
        C     I SPECK HANTEI I                                               *
        C     +---------------+                                              *
0066      190 IB(I0)=0                                                       *
0067          JAMARI=0                                                       *
0068          IKAN=0                                                         *
0069          DO 3 I3=1,JKOSUU                                               *
0070          IF(A(I3,I0).LT.SPECL.OR.A(I3,I0).GT.SPECKH) GO TO 390          *
0071          IB(I0)=IB(I0)+1                                                *
0072          IF(IB(I0).EQ.JKOSUU) GO TO 410                                 *
0073          GO TO 3                                                        *
0074      390 IKAN=IKAN+1                                                    *
0075          NOTS(IKAN)=I3                                                  *
```

SOURCE LIST

```
0076          3 CONTINUE                                                *
0077            IF(MINKU.EQ.1) GO TO 102                                *
0078            IF(JL2(NKOSUU,I0).EQ.0) GO TO 102                       *
          C     +-----------------------+                               *
          C     I PELLET OKIKAE (X-AXIS) I                              *
          C     +-----------------------+                               *
0079            DO 15 ING=1,IKAN                                        *
0080            L3=NOTS(ING)                                            *
0081            A(L3,I0)=0.0                                            *
0082            JAMARI=0                                                *
0083            L=0                                                     *
0084        106 L=L+1                                                   *
0085        105 X1=H1MR(L,L3,I0)                                        *
0086            X2=D1MR(L,L3,I0)                                        *
0087            X3=D1DGMR(L,L3,I0)                                      *
0088            X4=W1MR(L,L3,I0)                                        *
0089            X5=A1DEN(L,L3,I0)                                       *
0090            M1=N1MR(L,L3,I0)                                        *
0091            IF(JL2(L3,I0)-L)15,103,103                              *
0092        103 JAMARI=JAMARI+1                                         *
0093            H1MR(L,L3,I0)=H1MR(JAMARI,NKOSUU,I0)                    *
0094            D1MR(L,L3,I0)=D1MR(JAMARI,NKOSUU,I0)                    *
0095            D1DGMR(L,L3,I0)=D1DGMR(JAMARI,NKOSUU,I0)                *
0096            W1MR(L,L3,I0)=W1MR(JAMARI,NKOSUU,I0)                    *
0097            A1DEN(L,L3,I0)=A1DEN(JAMARI,NKOSUU,I0)                  *
0098            N1MR(L,L3,I0)=N1MR(JAMARI,NKOSUU,I0)                    *
0099            N1MR(JAMARI,NKOSUU,I0)=M1                               *
0100            H1MR(JAMARI,NKOSUU,I0)=X1                               *
0101            D1MR(JAMARI,NKOSUU,I0)=X2                               *
0102            D1DGMR(JAMARI,NKOSUU,I0)=X3                             *
0103            W1MR(JAMARI,NKOSUU,I0)=X4                               *
0104            A1DEN(JAMARI,NKOSUU,I0)=X5                              *
          C     +---------------------------+                           *
          C     I OKIKAE PELLT SPECK HANTEI I                           *
          C     +---------------------------+                           *
0105            JBL=JL2(L3,I0)                                          *
0106            DO 4 I4=1,JBL                                           *
0107            A(L3,I0)=A(L3,I0)+H1MR(I4,L3,I0)                        *
0108          4 CONTINUE                                                *
0109            IF(A(L3,I0).LT.SPECL.OR.A(L3,I0).GT.SPECKH) GO TO 80    *
0110            GO TO 190                                               *
          C     +-----------------------------------------------------+ *
          C     I SPECK NI AWANAITAME OKIKAETA PELLET O MOTONI MODOSU I *
          C     +-----------------------------------------------------+ *
0111         80 A(L3,I0)=0.0                                            *
0112            X6=H1MR(L,L3,I0)                                        *
0113            X7=D1MR(L,L3,I0)                                        *
0114            X8=D1DGMR(L,L3,I0)                                      *
0115            X9=W1MR(L,L3,I0)                                        *
0116            X10=A1DEN(L,L3,I0)                                      *
0117            M2=N1MR(L,L3,I0)                                        *
0118            H1MR(L,L3,I0)=H1MR(JAMARI,NKOSUU,I0)                    *
0119            D1MR(L,L3,I0)=D1MR(JAMARI,NKOSUU,I0)                    *
0120            D1DGMR(L,L3,I0)=D1DGMR(JAMARI,NKOSUU,I0)                *
0121            W1MR(L,L3,I0)=W1MR(JAMARI,NKOSUU,I0)                    *
```

SOURCE LIST

```
0122          N1MR(L,L3,I0)=N1MR(JAMARI,NKOSUU,I0)                          *
0123          A1DEN(L,L3,I0)=A1DEN(JAMARI,NKOSUU,I0)                        *
0124          H1MR(JAMARI,NKOSUU,I0)=X6                                     *
0125          D1MR(JAMARI,NKOSUU,I0)=X7                                     *
0126          D1DGMR(JAMARI,NKOSUU,I0)=X8                                   *
0127          W1MR(JAMARI,NKOSUU,I0)=X9                                     *
0128          A1DEN(JAMARI,NKOSUU,I0)=X10                                   *
0129          N1MR(JAMARI,NKOSUU,I0)=M2                                     *
0130          IF(JAMARI.NE.JL2(NKOSUU,I0))GO TO 105                         *
0131          JAMARI=0                                                      *
0132          GO TO 106                                                     *
0133       15 CONTINUE                                                      *
0134          YINKU=1                                                       *
0135          GO TO 190                                                     *
        C     +-------------------------+                                   *
        C     I PELLET OKIKAE (Y-AXIS) I                                    *
        C     +-------------------------+                                   *
0136      102 IF(I0-2)400,410,410                                           *
0137      400 KY3=1                                                         *
0138          KASIMA=0                                                      *
0139          MA=0                                                          *
0140          I0=2                                                          *
0141          KICK=1                                                        *
0142          DO 1 JOKE=1,JJJ                                               *
0143       62 DO 2 JOY=KY3,NKOSUU                                           *
0144          IF(H1MR(JOKE,JOY,1).EQ.0.0) GO TO 2                           *
0145          A(KICK,2)=A(KICK,2)+H1MR(JOKE,JOY,1)                          *
0146          KASIMA=KASIMA+1                                               *
0147          MA=MA+1                                                       *
0148          H1MR(KASIMA,KICK,2)=H1MR(JOKE,JOY,1)                          *
0149          D1MR(KASIMA,KICK,2)=D1MR(JOKE,JOY,1)                          *
0150          D1DGMR(KASIMA,KICK,2)=D1DGMR(JOKE,JOY,1)                      *
0151          W1MR(KASIMA,KICK,2)=W1MR(JOKE,JOY,1)                          *
0152          A1DEN(KASIMA,KICK,2)=A1DEN(JOKE,JOY,1)                        *
0153          N1MR(KASIMA,KICK,2)=N1MR(JOKE,JOY,1)                          *
0154          JL2(KICK,2)=KASIMA                                            *
0155          IF(IGOS.EQ.MA) GO TO 190                                      *
0156          IF(SPECL-DELTA-A(KICK,2))300,315,2                            *
0157      300 IF(SPECKH+DELTA-A(KICK,2))305,315,315                         *
0158        2 CONTINUE                                                      *
0159          KY3=1                                                         *
0160          GO TO 1                                                       *
0161      305 A(KICK,2)=A(KICK,2)-H1MR(JOKE,JOY,1)                          *
0162          A1DEN(1,KICK+1,2)=A1DEN(KASIMA,KICK,2)                        *
0163          W1MR(1,KICK+1,2)=W1MR(KASIMA,KICK,2)                          *
0164          D1DGMR(1,KICK+1,2)=D1DGMR(KASIMA,KICK,2)                      *
0165          D1MR(1,KICK+1,2)=D1MR(KASIMA,KICK,2)                          *
0166          H1MR(1,KICK+1,2)=H1MR(KASIMA,KICK,2)                          *
0167          N1MR(1,KICK+1,2)=N1MR(KASIMA,KICK,2)                          *
0168          KASIMA=KASIMA-1                                               *
0169          MA=MA-1                                                       *
0170          JL2(KICK,2)=KASIMA                                            *
0171      315 IF(NKOSUU-JOY)350,350,355                                     *
0172      350 KY3=1                                                         *
0173          KICK=KICK+1                                                   *
```

SOURCE LIST

```
0174            KASIMA=0                                                  *
0175            GO TO 1                                                   *
0176        355 KY3=JOY+1                                                 *
0177        360 KICK=KICK+1                                               *
0178            KASIMA=0                                                  *
0179            GO TO 82                                                  *
0180          1 CONTINUE                                                  *
0181        410 IF(IB(1)-IB(2))450,451,451                                *
0182        450 IF(IB(2)-IB(3))460,461,461                                *
0183        451 IF(IB(1)-IB(3))460,471,471                                *
0184        460 MAGIC=3                                                   *
0185            GO TO 600                                                 *
0186        461 MAGIC=2                                                   *
0187            GO TO 600                                                 *
0188        471 MAGIC=1                                                   *
0189        600 IB(3)=IB(MAGIC)                                           *
0190            DO 652 MISS=1,NKOSUU                                      *
0191            KNOCK=JL2(MISS,MAGIC)                                     *
0192            JL2(MISS,3)=KNOCK                                         *
0193            A(MISS,3)=A(MISS,MAGIC)                                   *
0194            INX=0                                                     *
0195            DO 650 NAME=1,KNOCK                                       *
0196            IF(H1MR(NAME,MISS,MAGIC).EQ.0.0) GO TO 651                *
0197            INX=INX+1                                                 *
0198            D1DGMR(INX,MISS,3)=D1DGMR(NAME,MISS,MAGIC)                *
0199            H1MR(INX,MISS,3)=H1MR(NAME,MISS,MAGIC)                    *
0200            D1MR(INX,MISS,3)=D1MR(NAME,MISS,MAGIC)                    *
0201            W1MR(INX,MISS,3)=W1MR(NAME,MISS,MAGIC)                    *
0202            A1DEN(INX,MISS,3)=A1DEN(NAME,MISS,MAGIC)                  *
0203            N1MR(INX,MISS,3)=N1MR(NAME,MISS,MAGIC)                    *
0204            GO TO 650                                                 *
0205        651 JL2(MISS,3)=JL2(MISS,3)-1                                 *
0206        650 CONTINUE                                                  *
0207        652 CONTINUE                                                  *
0208            IF(IB(3).EQ.JKOSUU) GO TO 5000                            *
          C     +-----------------+                                       *
          C     I PELLET O ZURASU I                                       *
          C     +-----------------+                                       *
0209            KK=KK+1                                                   *
0210            K2=KK                                                     *
0211            IGO=IGO+1                                                 *
0212            K3=K2-1                                                   *
0213            L2=K3                                                     *
0214            N1(IGO)=N1(K3)                                            *
0215            HEIG(IGO)=HEIG(K3)                                        *
0216            DIA1(IGO)=DIA1(K3)                                        *
0217            DIA2(IGO)=DIA2(K3)                                        *
0218            WEIG(IGO)=WEIG(K3)                                        *
0219            AMITUD(IGO)=AMITUD(K3)                                    *
0220            IF(K2.EQ.JL2(1,3)) GO TO 4000                             *
0221            GO TO 1350                                                *
0222       4000 ICA=0                                                     *
0223            JJJ=0                                                     *
0224            IF(JKOSUU.EQ.IB(3)) GO TO 5000                            *
0225            DO 4001 NEC=1,NKOSUU                                      *
```

SOURCE LIST

```
0226          IF(A(NEC,3).LT.SPECL.OR.A(NEC,3).GT.SPECKH) GO TO 4004                    *
0227          IPELL=JL2(NEC,3)                                                          *
0228          GO TO 4001                                                                *
0229     4004 JLL=JL2(NEC,3)                                                            *
0230          A(NEC,3)=0.0                                                              *
0231          JJJ=JJJ+1                                                                 *
0232          III(JJJ)=NEC                                                              *
0233          DO 4011 J1=1,JLL                                                          *
0234          ICA=ICA+1                                                                 *
0235          N1(ICA)=N1MR(J1,NEC,3)                                                    *
0236          HEIG(ICA)=H1MR(J1,NEC,3)                                                  *
0237          DIA1(ICA)=D1MR(J1,NEC,3)                                                  *
0238          DIA2(ICA)=D1DGMR(J1,NEC,3)                                                *
0239          WEIG(ICA)=W1MR(J1,NEC,3)                                                  *
0240          AMITUD(ICA)=A1DEN(J1,NEC,3)                                               *
0241     4011 CONTINUE                                                                  *
0242     4001 CONTINUE                                                                  *
0243          JPELL=IPELL-1                                                             *
0244          IOK=0                                                                     *
0245     9999 IOK=IOK+1                                                                 *
0246          JDA=III(IOK)                                                              *
0247          KING=0                                                                    *
0248          KONG=0                                                                    *
0249          GOZIRA=0                                                                  *
0250          JEV=1                                                                     *
0251          IF(ICA.LE.IPELL) GO TO 5000                                               *
0252     4500 NX1=0                                                                     *
0253          A(JDA,3)=0.0                                                              *
0254          DO 4005 JJ1=JEV,ICA                                                       *
0255          IF(JJ1.EQ.GOZIRA) GO TO 4005                                              *
0256          NX1=NX1+1                                                                 *
0257          A(JDA,3)=A(JDA,3)+HEIG(JJ1)                                               *
0258          H1MR(NX1,JDA,3)=HEIG(JJ1)                                                 *
0259          N1MR(NX1,JDA,3)=N1(JJ1)                                                   *
0260          D1MR(NX1,JDA,3)=DIA1(JJ1)                                                 *
0261          D1DGMR(NX1,JDA,3)=DIA2(JJ1)                                               *
0262          W1MR(NX1,JDA,3)=WEIG(JJ1)                                                 *
0263          A1DEN(NX1,JDA,3)=AMITUD(JJ1)                                              *
0264          NIPPON(NX1)=JJ1                                                           *
0265          JJ1EQ=JJ1+1                                                               *
0266          IF(JPELL.EQ.NX1) GO TO 4006                                               *
0267     4005 CONTINUE                                                                  *
0268          IF(IB(3).EQ.JKOSUU) GO TO 5000                                            *
0269     4006 S5=100.0                                                                  *
0270          S6=0.0                                                                    *
0271          DO 4007 JAS=JJ1EQ,ICA                                                     *
0272          IF(S5.GT.HEIG(JAS)) GO TO 4010                                            *
0273          GO TO 4020                                                                *
0274     4010 S5=HEIG(JAS)                                                              *
0275          IBC=JAS                                                                   *
0276     4020 IF(S6.LT.HEIG(JAS)) GO TO 4030                                            *
0277          GO TO 4007                                                                *
0278     4030 S6=HEIG(JAS)                                                              *
0279          IBS=JAS                                                                   *
0280     4007 CONTINUE                                                                  *
```

SOURCE LIST

```
0281          HMAX=A(JDA,3)+HEIG(IBS)                                    *
0282          HMIN=A(JDA,3)+HEIG(IBC)                                    *
        C     +----------------+                                         *
        C     I SPECK HANTEI  I                                          *
        C     +----------------+                                         *
0283          JMM=IPELL                                                  *
0284          IF(SPECL-HMIN)6010,6005,6001                               *
0285     6010 IF(SPECKH-HMIN)6030,6005,6005                              *
0286     6001 IF(SPECL-HMAX)6045,6040,6030                               *
0287     6045 IF(SPECKH-HMAX)6050,6040,6040                              *
0288     6050 A(JDA,3)=HMAX-HEIG(IBS)                                    *
0289          DO 6055 MUSUU=JJ1EQ,ICA                                    *
0290          A(JDA,3)=A(JDA,3)+HEIG(MUSUU)                              *
0291          IF(A(JDA,3).LT.SPECL.OR.A(JDA,3).GT.SPECKH) GO TO 6051     *
0292          H1MR(JMM,JDA,3)=HEIG(MUSUU)                                *
0293          D1MR(JMM,JDA,3)=DIA1(MUSUU)                                *
0294          D1DGMR(JMM,JDA,3)=DIA2(MUSUU)                              *
0295          W1MR(JMM,JDA,3)=WEIG(MUSUU)                                *
0296          N1MR(JMM,JDA,3)=N1(MUSUU)                                  *
0297          A1DEN(JMM,JDA,3)=AMITUD(MUSUU)                             *
0298          NIPPON(JMM)=MUSUU                                          *
0299          IB(3)=IB(3)+1                                              *
0300          GO TO 4900                                                 *
0301     6051 A(JDA,3)=A(JDA,3)-HEIG(MUSUU)                              *
0302     6055 CONTINUE                                                   *
0303     6030 KING=KING+1                                                *
0304          GOZIRA=KING+KONG                                           *
0305          IF((KING-1).EQ.JMM) GO TO 7000                             *
0306          GO TO 4500                                                 *
0307     7000 KONG=KONG+1                                                *
0308          JEV=KONG                                                   *
0309          KING=0                                                     *
0310          IF((KONG+JPELL).EQ.ICA) GO TO 5000                         *
0311          GO TO 4500                                                 *
0312     6005 A(JDA,3)=HMIN                                              *
0313          H1MR(JMM,JDA,3)=HEIG(IBC)                                  *
0314          D1MR(JMM,JDA,3)=DIA1(IBC)                                  *
0315          D1DGMR(JMM,JDA,3)=DIA2(IBC)                                *
0316          W1MR(JMM,JDA,3)=WEIG(IBC)                                  *
0317          N1MR(JMM,JDA,3)=N1(IBC)                                    *
0318          A1DEN(JMM,JDA,3)=AMITUD(IBC)                               *
0319          NIPPON(JMM)=IBC                                            *
0320          IB(3)=IB(3)+1                                              *
0321          GO TO 4900                                                 *
0322     6040 A(JDA,3)=HMAX                                              *
0323          H1MR(JMM,JDA,3)=HEIG(IBS)                                  *
0324          D1MR(JMM,JDA,3)=DIA1(IBS)                                  *
0325          D1DGMR(JMM,JDA,3)=DIA2(IBS)                                *
0326          W1MR(JMM,JDA,3)=WEIG(IBS)                                  *
0327          N1MR(JMM,JDA,3)=N1(IBS)                                    *
0328          A1DEN(JMM,JDA,3)=AMITUD(IBS)                               *
0329          NIPPON(JMM)=IBS                                            *
0330          IB(3)=IB(3)+1                                              *
0331     4900 DO 4950 ICUT=1,JMM                                         *
0332          JAPAN=NIPPON(ICUT)                                         *
```

SOURCE LIST

```
0333          HEIG(JAPAN)=0.0                                                  *
0334          N1(JAPAN)=0                                                      *
0335          DIA1(JAPAN)=0.0                                                  *
0336          DIA2(JAPAN)=0.0                                                  *
0337          WEIG(JAPAN)=0.0                                                  *
0338          AMITUD(JAPAN)=0.0                                                *
0339     4950 CONTINUE                                                         *
0340          KAME=0                                                           *
0341          DO 4955 KK=1,ICA                                                 *
0342          IF(N1(KK).EQ.0) GO TO 4955                                       *
0343          KAME=KAME+1                                                      *
0344          HEIG(KAME)=HEIG(KK)                                              *
0345          N1(KAME)=N1(KK)                                                  *
0346          DIA1(KAME)=DIA1(KK)                                              *
0347          DIA2(KAME)=DIA2(KK)                                              *
0348          WEIG(KAME)=WEIG(KK)                                              *
0349          AMITUD(KAME)=AMITUD(KK)                                          *
0350          ICAA=KAME                                                        *
0351     4955 CONTINUE                                                         *
0352          ICA=ICAA                                                         *
0353          GO TO 9999                                                       *
0354     5000 DO 11 JAL1=1,NKOSUU                                              *
0355          JUPTER=1                                                         *
0356          W=0.0                                                            *
0357          H=0.0                                                            *
0358          JCA=JL2(JAL1,3)                                                  *
0359          JIN=JCA-1                                                        *
0360          DO 19 KIMIKO=1,JIN                                               *
0361          IIONNA=KIMIKO+1                                                  *
0362          DO 20 JEMMY=IIONNA,JCA                                           *
0363          IF(N1MR(KIMIKO,JAL1,3).LT.N1MR(JEMMY,JAL1,3)) GO TO 20           *
0364          KB=N1MR(KIMIKO,JAL1,3)                                           *
0365          Z1=D1MR(KIMIKO,JAL1,3)                                           *
0366          Z2=D1DGMR(KIMIKO,JAL1,3)                                         *
0367          Z3=H1MR(KIMIKO,JAL1,3)                                           *
0368          Z4=W1MR(KIMIKO,JAL1,3)                                           *
0369          Z5=A1DEN(KIMIKO,JAL1,3)                                          *
0370          N1MR(KIMIKO,JAL1,3)=N1MR(JEMMY,JAL1,3)                           *
0371          D1MR(KIMIKO,JAL1,3)=D1MR(JEMMY,JAL1,3)                           *
0372          D1DGMR(KIMIKO,JAL1,3)=D1DGMR(JEMMY,JAL1,3)                       *
0373          H1MR(KIMIKO,JAL1,3)=H1MR(JEMMY,JAL1,3)                           *
0374          W1MR(KIMIKO,JAL1,3)=W1MR(JEMMY,JAL1,3)                           *
0375          A1DEN(KIMIKO,JAL1,3)=A1DEN(JEMMY,JAL1,3)                         *
0376          N1MR(JEMMY,JAL1,3)=KB                                            *
0377          D1MR(JEMMY,JAL1,3)=Z1                                            *
0378          D1DGMR(JEMMY,JAL1,3)=Z2                                          *
0379          H1MR(JEMMY,JAL1,3)=Z3                                            *
0380          W1MR(JEMMY,JAL1,3)=Z4                                            *
0381          A1DEN(JEMMY,JAL1,3)=Z5                                           *
0382       20 CONTINUE                                                         *
0383       19 CONTINUE                                                         *
0384        5 MS=MS+1                                                          *
0385          WRITE(6,6)(TITLE(M),M=1,20)                                      *
0386        6 FORMAT(1H1,/,31X,20A4)                                           *
0387          WRITE(6,10)JAL1,MS                                               *
```

SOURCE LIST

```
0388          10 FORMAT(1X,1H+,11(1H-),1H+,16X,80(1H-),10X,1H+,9(1H-),1H+,/,          *
                11X,1HI,8H PIN NO ,I2,1X,1HI,106X,1HI,' PAGE',I2,2X,1HI,/,             *
                21X,1H+,11(1H-),1H+,106X,1H+,9(1H-),1H+,/,13X,1H+,117(1H-),            *
                31H+,/,13X,1HI,' PEELET NO. ',1HI,'  DIAMETER(X-AXIS)  ',1HI,          *
                4'  DIAMETER(Y-AXIS)  ',1HI,7X,'HEIGHT',7X,1HI,7X,'WEIGHT',7X,1HI,     *
                56X,'DENSITY',7X,1HI,/,13X,1HI,12X,1HI,14X,'(MM)',2X,1HI,14X,          *
                6'(MM)',2X,1HI,9X,'(MM)',7X,1HI,7X,'(GRAM)',7X,1HI,4X,                 *
                7'(PERCENT)',7X,1HI,/,                                                 *
                613X,1H+,117(1H-),1H+)                                                 *
0389            DO 12 JAL2=JUPTER,JCA                                                  *
0390            WRITE(6,91)N1MR(JAL2,JAL1,3),D1MR(JAL2,JAL1,3),                        *
               *D1DGMR(JAL2,JAL1,3),H1MR(JAL2,JAL1,3),                                 *
               *W1MR(JAL2,JAL1,3),A1DEN(JAL2,JAL1,3)                                   *
0391          91 FORMAT(13X,1HI,4X,I4,4X,5(1HI,7X,F10.3,3X),1HI)                      *
0392            H=H+H1MR(JAL2,JAL1,3)                                                  *
0393            W=W+W1MR(JAL2,JAL1,3)                                                  *
0394            MUF=JAL2-JAL2/50*50                                                    *
0395            IF(MUF.EQ.0) GO TO 7                                                   *
0396          12 CONTINUE                                                              *
0397            WRITE(6,500)H,W                                                        *
0398         500 FORMAT(13X,1H+,117(1H-),1H+,//,60X,'TOTAL HEIGHT ',F10.3,             *
                11X,'(MM)',/,60X,'TOTAL WEIGHT ',F10.3,1X,'(GRAM)')                    *
0399          11 CONTINUE                                                              *
0400            GO TO 201                                                              *
0401           7 JUPTER=JAL2+1                                                         *
0402            WRITE(6,205)                                                           *
0403         205 FORMAT(13X,1H+,117(1H-),1H+)                                          *
0404            GO TO 5                                                                *
0405         201 RETURN                                                                *
0406            END                                                                    *
```